Service Manual

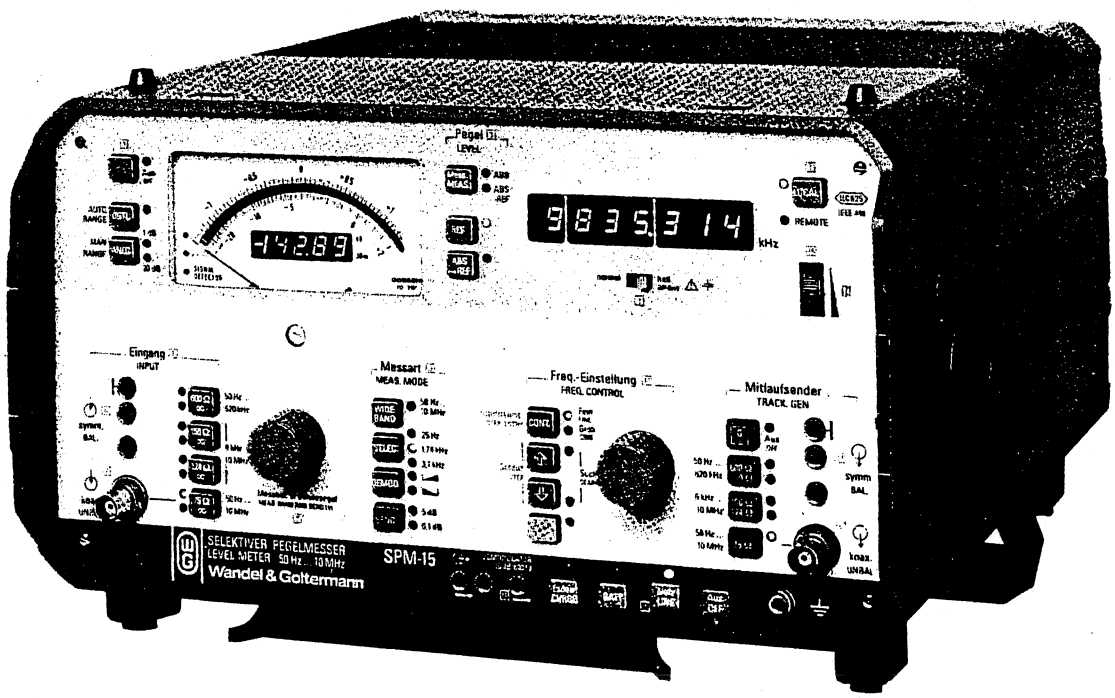

Selective Level Meter

SPM-15

for the frequency range 50 Hz to 10 MHz, send section available

BN 0955/00.83

SELCTIVE LEVEL METER SPM-15

for the frequency range
50 Hz to 10 MHz, send section available

Service Manual BN 955, series A...

Order No. BN 0955/00.83
Edition 3467/2.87

I.2.87 VMS/Ar
0.24.2.87

Subject to change without notice
Printed in the Federal Republic of Germany

Wandel & Goltermann Electronic Measurement Technology

Addresses

International Sales and Service

Head office

Wandel & Goltermann GmbH & Co
Postfach 12 62
D-7412 Eningen u.A.
Federal Republic of Germany
Tel. +49-71 21-86-0
tlx. 7 29 833 wug d
FAX +49-71 21-8 84 04

Affiliated companies

Argentina
Wandel & Goltermann & Co
Montaneses 2599
1428 Buenos Aires
Tel. 1-7 84 66 42, tlx. 24 543 wglas ar

Australia
Wandel & Goltermann Pty. Ltd.
P.O.B. 6202, St. Kilda Road Central
Melbourne, Victoria 3004
Tel. 03-2 67 86 99, tlx. 34 801 WGAUS

Austria
Wandel & Goltermann Ges.m.b.H.
Postfach 13, A-2500 Baden
Tel. 22 52-8 55 21-0, tlx. 14 375 wgo a

Belgium/Luxemburg
Wandel & Goltermann BV
Schrikheidestraat 69
B-3560 Koersel, Tel. 11-43 24 12

Brazil
Wandel & Goltermann & Co
Rua da Assembleia 10, Sala 2711
20011 Rio de Janeiro – RJ
Tel. 242-7622, tlx. 2 137 438

Canada
Wandel & Goltermann Inc.
21, Rolark Drive
Scarborough, Ontario M1R 3B1
Tel. 416-2 91 71 21, tlx. 610-492-2712

France
Wandel & Goltermann France
46 bis, rue Pierre Curie
B.P. 53 · ZI Les Gâtines
F-78370 Plaisir Cédex
Tel. (1) 30 55 81 90, tlx. 698 955

Great Britain
Wandel & Goltermann Ltd.
Progress House, 412 Greenford Road
Greenford, Middlesex, UB6 9AH
Tel. 1-5 75 30 20/4, tlx. 934 489 waguk g

Guatemala
Wandel & Goltermann & Co
Ap. postal 2761, Guatemala City
Tel. 22-31 80 65, tlx. 5 432 wagola gu

Hong Kong
Wandel & Goltermann Ltd.
15/F, United Centre
95 Queensway, Central
Tel. 5-27 53 39, tlx. 81 590 wago hx

The Netherlands/Belgium/Luxemburg
Wandel & Goltermann BV
Monnickskamp 8 B
NL-1273 JS HUIZEN Nederland
Tel. 2152-66 122, tlx. 43 348 wango nl

Singapore
Wandel & Goltermann
151 Chin Swee Road, Room 14-11
Manhattan House, Singapore 0316
Tel. 7 33 07 22, tlx. 38 133 wandel rs

Sweden
Wandel & Goltermann AB
Box 6044, S-126 04 Haegersten (Stockholm)
Tel. 8-88 04 80, tlx. 17 783 wgab s

Switzerland
Wandel & Goltermann (Schweiz) AG
Postfach 254, CH-3000 Bern 25
Tel. 31-42 66 44, tlx. 912 350 wgoch

USA
Wandel & Goltermann, Inc.
P.O.B. 13 585, Imperial Center
Research Triangle Park, NC 27 709-3585
Tel. 919-544-57 30, tlx. 810-621-0 002

CONTENTS

PART I: LEVEL METER SPM-15

6 PRELIMINARY REMARKS 6-1

6.1 Introduction to servicing 6-1
6.1.1 Measuring equipment 6-1

7 NOTES ON TROUBLESHOOTING AND REPAIRS 7-1

7.1 Safety measures 7-1
7.1.1 Electrical safety 7-1
7.1.2 Circuitry protection 7-2
7.1.3 Soldering instructions 7-2
7.1.4 Instrument data 7-3
7.1.5 Dismantling the instrument 7-5

7.2 Location of assemblies, alignment elements, test points 7-7

7.3 Notes on troubleshooting 7-16
7.3.1 Fault localization concept 7-16
7.3.2 Reset 7-16
7.3.3 Localization of faults in modules 7-16
7.3.3.1 Power supply 7-17
7.3.3.2 Control section (CPU and front panel unit) 7-18
7.3.3.3 OD-15 (synthesizer) 7-18
7.3.3.4 Measuring section and tracking generator 7-19
7.3.3.5 Summary of fault and message numbers 7-19

7.4 Troubleshooting in the control section 7-19
7.4.1 Troubleshooting on the CPU 7-19
7.4.1.1 Troubleshooting on the CPU with more accurate definition of the fault 7-20
7.4.1.2 Troubleshooting on the CPU without more accurate definition of the fault 7-20
7.4.1.3 Signature analysis with the hp 5004A or 5005A 7-22
7.4.1.4 Free processor run 7-23
7.4.1.5 EPROM signature 7-24
7.4.1.6 RAM stimulus 7-24
7.4.1.7 Free I/O address run 7-25
7.4.1.8 Program-controlled I/O stimulus 7-25
7.4.1.9 Program-controlled synthesizer stimulus 7-26
7.4.1.10 Switch settings of 21 S 1 and 21 S 2 7-27
7.4.2 RF controller 7-27
7.4.3 Testing the front panel functions 7-28
7.4.3.1 Check LED activation 7-30
7.4.3.2 Check interrupt logic 7-38
7.4.3.3 Keyboard logic 7-40
7.4.3.4 Level switch 7-41
7.4.3.5 Frequency adjustment 7-42
7.4.3.6 Input section controller 7-43
7.4.3.7 ADC 7-44

7.5 Troubleshooting in the measuring section 7-46
7.5.1 General information 7-46
7.5.2 Input section and pre-amplifier 7-48
7.5.3 10 MHz low-pass filter, mixer 1, 40 MHz crystal band-pass filter, mixer 2 7-48
7.5.4 10 kHz band-pass filters, IF selective amplifier 7-49
7.5.5 IF wideband amplifier, rectifier 7-50
7.5.6 DC evaluation circuit [955-J] 7-51
7.5.6.1 Tools required - general information 7-51
7.5.6.2 First step on DC evaluation circuit 7-51
7.5.6.3 Check calibration controller 7-52
7.5.6.4 Check 0/16 dB amplifier 7-52
7.5.6.5 Check 0.1/1 dB amplifier 7-53
7.5.6.6 Check reference voltages 7-54
7.5.6.7 Check logarithmizer and shift amplifier 7-54
7.5.6.8 Check 20 dB scale 7-56
7.5.6.9 1 dB scale 7-56
7.5.6.10 Check 4-bit ADC 7-57
7.5.6.11 Check instrument shut-off 7-58
7.5.7 Demodulator 7-58
7.5.8 Calibrating mixer 7-58

7.6 Troubleshooting in the tracking generator (PSE) 7-59
7.6.1 General information 7-59
7.6.2 Fine level adjustment 7-60
7.6.3 Divider controller 7-61
7.6.4 Z_o output value 7-62

7.7 Troubleshooting in the power supply 7-63
7.7.1 Charging circuit 7-63

7.8 Alignment operations and test measurements 7-64
7.8.1 Summary: list of all alignment elements, alignment operations and test measurements after replacing assemblies 7-64
7.8.2 Power supply: tripping thresholds for undervoltage (1 P 1, 1 P 2) 7-69
7.8.3 Input section (2) 7-69
7.8.3.1 Return loss 75 Ω (2 C 2, for WECO instruments: 2 C 14) 7-69
7.8.3.2 Signal balance ratio 600 Ω, 124 Ω (2 C 3, 2 C 5, for WECO instruments: 2 C 1, 2 C 3) 7-70
7.8.3.3 Frequency response 124 Ω, 150 Ω, (135 Ω), 600 Ω (2 C 11, WECO: 2 C 12) 7-70
7.8.4 Pre-amplifier (3) 7-71
7.8.4.1 DC operating point (3 P 5) 7-71
7.8.4.2 Absolute accuracy of dividers, amplifiers (check only) 7-71
7.8.4.3 Frequency responses of dividers, amplifiers 7-72
7.8.4.4 Absolute level of the wideband output (3 P 6) 7-73
7.8.5 Input low-pass filter 10 MHz (4) 7-73
7.8.6 Mixer 1 (5) 7-75
7.8.7 Crystal band-pass filter 40 MHz (7) 7-75
7.8.8 Mixer 2 (8) 7-77
7.8.9 Band-pass filters 10 kHz/b = 3.1 kHz and b = 1.74 kHz (9) 7-77
7.8.10 Band-pass filter 10 kHz/b = 25 Hz mech. (22) 7-77
7.8.11 IF evaluation circuit (15) 7-78
7.8.11.1 Gain correction of the selective path (15 P 1) 7-78
7.8.11.2 IF selective amplifier (V_{IF} = 0 ... 80 dB) (check) 7-78
7.8.11.3 IF wideband amplifier (15 C 110), IF output [35] 7-79
7.8.11.4 Rectifier (15 C 126, 15 P 101, 15 P 102, 15 P 103) 7-80
7.8.11.5 DC evaluation circuit (15 P 2xx) 7-81
7.8.11.6 Demodulator (15 C 424, 428, 15 P 401, 402) 7-82
7.8.12 Display meter: mechanical zero point (19) 7-83
7.8.13 Buffer amplifier (11 C 6, 11 C 8), carrier output [34] 7-83
7.8.14 40.01 MHz generator (12) 7-83
7.8.15 Calibrating mixer (10) 7-84
7.8.15.1 Calibration level frequency response (10 C 51, 10 C 52) 7-84
7.8.15.2 Absolute selective calibration level (10 P 1) 7-86
7.8.15.3 Absolute wideband calibration level (10 P 2) 7-87
7.8.16 Tracking generator, series A ... D: (23), series E ...: (23) and (25) 7-87
7.8.16.1 Return loss 75 Ω (series A ... D: 23 C 33) (series E...: 25 C 1) 7-87
7.8.16.2 Accuracy of fine level adjustment and dividers 7-88
7.8.16.3 Frequency response of 10 MHz low-pass filter and PSE amplifier without dividers 7-90
7.8.16.4 Frequency responses for all divider settings 7-91
7.8.16.5 Signal balance ratio 124 Ω, 150 Ω, (132 Ω), 600 Ω 7-92
7.8.16.6 Frequency responses 124 Ω, 150 Ω, (135 Ω), 600 Ω, $R_i \approx 0$ 7-93
7.8.16.7 Absolute level 0 dBm/75 Ω 7-95

8 SPECIFICATION CHECK 8-1

8.1 Introduction 8-1

8.2 Tuning frequency accuracy 8-2

8.3 Noise floor 8-3

8.4 Level accuracy, SPM-15 8-4
8.4.1 Absolute accuracy, coaxial input 8-4
8.4.2 Absolute accuracy, balanced input 8-5
8.4.3 Divider error 8-6
8.4.4 Frequency response, coaxial input 8-7
8.4.5 Frequency response, balanced input 8-9

8.5 Selectivity 8-10

8.6 Harmonic distortion products 8-11

8.7 Noise power ratio 8-12

8.8 Measuring inputs 8-13
8.8.1 Return loss, coaxial input 8-13
8.8.2 Return loss, balanced input 8-14
8.8.3 Signal balance ratio 8-15

8.9 Level accuracy, PSE-15 8-16
8.9.1 Absolute accuracy, coaxial output 8-16
8.9.2 Absolute accuracy, balanced output 8-17
8.9.3 Divider error 8-18
8.9.4 Frequency response, coaxial output 8-18
8.9.5 Frequency response, balanced output 8-19

8.10 Spectral purity 8-20

8.11 Generator outputs 8-20
8.11.1 Return loss, coaxial output 8-20
8.11.2 Return loss, balanced output 8-22
8.11.3 Signal balance ratio 8-23

9 FUNCTIONAL AND CIRCUITRY DESCRIPTION 9-1

9.1 Functional description of the overall instrument 9-1
9.1.1 Signal path for selective measurement 9-1
9.1.1.1 Signal path for 20 dB scale 9-1
9.1.1.2 Signal path for 1 dB scale 9-1
9.1.2 Signal path for wideband measurement 9-1
9.1.3 Carrier generation 9-2
9.1.4 Tracking generator 9-2

9.2 Circuitry description 9-2
9.2.1 Power supply [955-AJ] 9-2
9.2.2 Input section [955-AF]/[955-AL] 9-3
9.2.3 Pre-amplifier [955-M] 9-3
9.2.4 10 MHz low-pass filter [955-N/O] 9-4
9.2.5 Mixer 1 [955-R] 9-5
9.2.6 Carrier limiter [955-S] 9-5
9.2.7 40 MHz crystal band-pass filter (7) [955-T], [955-U], [955-V], [955-W] 9-5
9.2.8 Mixer 2 (8) [955-AC], [955-AD] 9-5
9.2.9 10 kHz band-pass filter (9), [955-AB] 9-6
9.2.10 Calibrating mixer (10), [955-AE] 9-6
9.2.11 Divider stage (11) [955-AA] 9-7
9.2.12 40.010 MHz generation (12) [955-X], [955-Y], [955-Z] 9-7
9.2.13 RF controller [955-E] 9-10
9.2.14 Interface [955-AM1] 9-10
9.2.15 IF evaluation circuit (15) [955-J] 9-10
9.2.16 } intentionally omitted
9.2.17 }
9.2.18 }
9.2.19 Display logic 9-17
9.2.20 Input circuitry (20) [955-B] 9-19
9.2.21 CPU board [955-F1] 9-20
9.2.22 10 kHz band-pass filter/25 Hz mech. [955-K] 9-22
9.2.23 Tracking generator [955-AN], [955-AO], [955-AP], [955-AH], [955-AK], series A ... D 9-22

9.3 General software description 9-25
9.3.1 Program sequence at power-up 9-25
9.3.2 Input method 9-25
9.3.2.1 Input method for manual operation 9-25
9.3.2.2 Input method for IEC bus operation 9-25
9.3.3 Memory assignment 9-27
9.3.3.1 Memory assignment, CPU [955-F1] (32 K) 9-27
9.3.3.2 Memory assignment, CPU-F1, modified (48 K) 9-27
9.3.4 I/O assignment 9-27
9.3.5 Analog measuring programs 9-28
9.3.5.1 Level diagram for selective level measurement and low-noise modulation 9-28
9.3.5.2 Level diagram for selective measurement and low-distortion modulation 9-29
9.3.5.3 Program sequence for analog selective level measurement and ABS mode 9-29
9.3.5.4 Program sequence for analog selective level measurement and ABS-REF mode 9-29
9.3.6 Analog wideband measurement 9-30
9.3.7 Digital measuring program 9-31
9.3.7.1 Digital measuring program - calibration off 9-31
9.3.7.2 Digital program - calibration on 9-31
9.3.8 "Full range" search 9-32

9.3.9 Automatic level calibration 9-32
9.3.9.1 Calibration criteria 9-32
9.3.9.2 Calibration frequencies 9-32
9.3.9.3 Calibration routine 9-33
9.3.10 Continuous frequency adjustment 9-34
9.3.11 Software versions 9-34

9.4 Gate assignments 9-35
9.4.1 Gate assignments, receiver 9-35
9.4.2 Gate assignments, tracking generator (PSE) 9-42
9.4.2.1 Gate assignments, PSE (series A ... D) 9-42
9.4.2.2 Gate assignments, PSE (from series E onwards), normal version 9-43
9.4.2.3 Gate assignments, PSE (from series E onwards), WECO version 9-43
9.4.3 Bit configurations for DC amplifier 9-44
9.4.3.1 ADR 25H - calibration controller 9-44
9.4.3.2 ADR 23H, 24H - 0.1 dB amplifier 9-44
9.4.4 Key assignments 9-45
9.4.5 RAM contents of the display logic 9-45
9.5 Monitor (MONEX)-functions 9-46
9.5.1 General 9-46
9.5.2 With external control section "MONEX" 9-46
9.5.3 Internal monitor mode 9-46
9.5.4 Description of the individual monitor functions 9-48
9.5.5 Monitor test programs 9-50
9.5.6 Program example: cyclic activation of an address 9-52

9.6 IEC bus interface (option) 9-53
9.6.1 Circuitry description 9-53
9.6.1.1 IEC bus adaptor 9-53
9.6.2 IEC bus software description 9-54

FIGURES

7.1-1 Dismantling the instrument; instrument data 7-4
7.1-2 Removing control knobs 7-5
7.1-3 Casings and frames 7-6
7.2-1 SPM-15, front view 7-7
7.2-2 SPM-15, side view from left 7-8
7.2-3 SPM-15, top hinged frame from above 7-9
7.2-4 SPM-15, top hinged frame from below 7-10
7.2-5 SPM-15, RF chassis from above 7-11
7.2-6 SPM-15, RF chassis from below 7-12
7.2-7 SPM-15, rear instrument wall open 7-13
7.2-8 SPM-15, side view from right (series A ... D) 7-14
7.2-9 SPM-15, side view from right (series E ...) 7-15
7.3-1 Function blocks of the SPM-15 7-17
7.3-2 Wiring of the supply voltages ..... see end of service manual
7.4-1 Example of a signature list 7-24
7.4-2 Clock profile of RAM controller 7-32
7.4-3 Voltages at the segment driver 7-37
7.4-4 Voltages at the current compensator 7-37
7.4-5 Timing diagram: ADC data flow 7-45
7.5-1 Level diagram for coaxial wideband measurement 7-47
7.5-2 Level diagram of the selective measuring path up to the IF output ..... see end of service manual
7.5-3 +12 V supply voltage on the RF chassis ..... see end of service manual
7.5-4 Block circuit diagram, input section and pre-amplifier 7-48
7.6-1 Block circuit diagram of the PSE 7-60
7.8-1 List of alignment elements 7-64
7.8-2 Alignment operations after replacing assemblies 7-67

8-1 Test set-up (tuning frequency accuracy) 8-2
8-2 Table for checking the noise floor for Z_o = 75 Ω 8-3
8-3 Table for checking the noise floor for Z^o = 124/150 Ω 8-3
8-4 Table for checking the noise floor for Z^o = 600 Ω 8-3
8-5 Test set-up (absolute accuracy, coaxial)^o 8-4
8-6 Test set-up (absolute accuracy, balanced) 8-5
8-7 Table for verifying the absolute accuracy (balanced) 8-6
8-8 Test set-up (divider test) 8-6
8-9 Table for verifying the divider error 8-7
8-10 Test set-up (frequency response, coaxial) 8-7
8-11 Table for verifying the frequency response error (coaxial/selective) 8-8
8-12 Table for verifying the frequency response error (coaxial/wideband) 8-8
8-13 Test set-up (frequency response, balanced) 8-9

8-14 Table for verifying the frequency response error (balanced) 8-10
8-15 Table for verifying the selectivity 8-11
8-16 Test set-up (harmonic distortion products) 8-11
8-17 Table for verifying the harmonic distortion products 8-12
8-18 Test set-up (return loss, coaxial) 8-13
8-19 Test set-up (return loss, balanced) 8-14
8-20 Table for verifying the return loss (balanced) 8-15
8-21 Test set-up (signal balance ratio) 8-15
8-22 Table for verifying the signal balance ratio 8-16
8-23 Test set-up (absolute accuracy, balanced) 8-17
8-24 Table for verifying the absolute accuracy (balanced) 8-17
8-25 Test set-up (divider test) 8-18
8-26 Table for verifying the frequency response error (coaxial) 8-19
8-27 Table for verifying the frequency response error (balanced) 8-19
8-28 Table for verifying the spectral purity 8-20
8-29 Test set-up (return loss, coaxial) 8-21
8-30 Table for verifying the return loss (coaxial) 8-21
8-31 Test set-up (return loss, balanced) 8-22
8-32 Table for verifying the return loss (balanced) 8-23
8-33 Test set-up (signal balance ratio) 8-23
8-34 Table for verifying the signal balance ratio 8-24

9-1 Controller operating mode 9-4
9-2 Bit configuration for pre-amplifier 9-4
9-3 Calibrating mixer for selective operation 9-6
9-4 PLL operating mode 9-8
9-5 Signals in the phase comparator and interference suppressor with PSS locked 9-9
9-6 Bit assignment on the RF controller 9-10
9-7 Gains activated for dBm setting 9-10
9-8 Principle of the IF selective amplifier 9-11
9-9 Bit configuration for ADR-2ØH 9-11
9-10 Bit configuration for ADR-21H 9-12
9-11 Principle of the IF wideband amplifier 9-12
9-12 Principle of the rectifier 9-13
9-13 Principle of the 0.1 dB increment amplifier 9-14
9-14 Principle of the logarithmizer 9-14
9-15 Principle of frequency generation for the demodulator 9-16
9-16 Bit configuration for input section 9-17
9-17 Principle of the RAM controller 9-18
9-18 Principle of offsetting for ADC and computer value for "DGTL" = HIGH 9-19
9-19 Simplified circuit diagram of the power output stage 9-20
9-20 Simplified AC circuit diagram, amplifier stage 1 9-22
9-21 Simplified AC circuit diagram, amplifier stage 2 9-23
9-22 Simplified AC circuit diagram, amplifier stage 3 9-24
9-23 Software, general program sequence 9-26
9-24 Key assignments in monitor mode ..... see end of service manual
9-25 Block circuit diagram of the IEC bus interface BN 955 .... see end of service manual
9-26 Structure of the IEC bus program 9-54

PART II: SYNTHESISER OD-15

6 INTRODUCTION 6-1
6.1 Introduction to servicing 6-1
6.2 Test equipment 6-1

7 TROUBLESHOOTING AND REPAIRS 7-1
7.1 Safety precautions 7-1
7.2 Layout of modules, adjustment components and test points 7-1
7.3 Troubleshooting 7-5
7.3.1 Fault location 7-5
7.4 Troubleshooting the control circuits 7-5
7.5 Troubleshooting the OD-15 synthesiser 7-5
7.5.1 Procedure 7-5
7.5.2 Checking the modules 7-6
7.5.3 Troubleshooting the individual functional groups 7-7
7.5.3.1 Troubleshooting the interpolation loop (53) to (59) 7-7
7.5.3.2 Troubleshooting the locking loop (58), (59) 7-8
7.5.3.3 Troubleshooting the carrier loop (60) to (63) 7-9
7.5.3.4 Signals 7-10
7.6 Further troubleshooting 7-12
7.6.1 External control 7-12
7.7 Adjustment procedure 7-12
7.7.1 Overview 7-12
7.7.2 Absolute frequency, Crystal timebase (51 P 1) 7-13
7.7.3 Interpolation signal amplitude 7-13
7.7.4 Interpolation oscillator setting range (53 P 2) 7-13
7.7.5 Offset voltage, 57 IC 7 (57 P 5) 7-14
7.7.6 Offset voltage, 57 IC 6 (57 P 4) 7-14
7.7.7 Frequency weighting (57 P 2) 7-14
7.7.8 Phase slope (57 P 1) 7-14
7.7.9 Subharmonic compensation (57 P 3) 7-14
7.7.10 Offset voltage 59 IC 1 (59 P 1) 7-15
7.7.11 Pulling range, locking oscillator (58 P 1 to 58 P 5) 7-15
7.7.12 Carrier oscillator setting range (60 L 2) 7-15
7.7.13 Carrier signal amplitude (60 P 1) 7-16

8 SPECIFICATION CHECK 8-1

9 CIRCUIT DESCRIPTION AND FUNCTION 9-1
9.1 Instrument function 9-1
9.1.1 Standard frequency generator and processor 9-1
9.1.2 Locking loop 9-1
9.1.3 Interpolation loop 9-1
9.1.4 Carrier loop 9-1
9.2 Circuit descriptions: modules and options 9-2
9.2.1 10 MHz quartz controlled timebase TTL (51) 9-2
9.2.1.1 10 MHz quartz controlled timebase TTL for SPM-15 [2011-P] 9-2
9.2.1.2 10 MHz quartz controlled timebase TTL for PS-15 [2011-E] 9-2
9.2.2 Timebase divider (52) [2011-F] 9-2
9.2.3 Interpolation oscillator (53) [2011-D, D1] 9-2
9.2.4 Buffer stage (54) [2011-H] 9-2
9.2.5 Interpolation divider 2 (55) [2011-G] 9-3
9.2.6 Interpolation divider 1 (56) [2011-J] 9-4
9.2.7 Interpolation phase meter (57) [2011-K, K1] 9-9
9.2.8 Locking oscillator (58) [2011-N] 9-10
9.2.9 Locking phase meter (59) [2011-A] 9-10
9.2.10 Carrier oscillator (60) [2011-M] 9-10
9.2.11 Mixer (61) [2011-B] 9-10
9.2.12 Carrier phase meter (62) [2011-C] 9-10
9.2.13 Output amplifier (63) [2011-L] 9-11
9.2.14 Digital control 9-11

FIGURES

6.2-1 Test equipment..... 6-1

7.2-1 OD-15 outer section with covers..... 7-1
7.2-2 OD-15 outer section with covers removed..... 7-2
7.2-3 OD-15 inner section with covers..... 7-3
7.2-4 OD-15 inner section with covers removed..... 7-4
7.5-1 OD-15 block diagram..... 7-10
7.5-2 OD-15 signal shapes..... 7-11
7.5-3 Setting table for interpolation divider 1/2..... 7-11
7.7-1 List of all adjustment components..... 7-12
7.7-2 Adjustments after replacing modules..... 7-13
7.7-3 Control voltage, locking oscillator..... 7-15

9.2-1 Pulse blanking circuit signals..... 9-3
9.2-2 Subharmonic blanking pulses..... 9-5
9.2-3 Control signal processing, interpolation divider 1..... 9-6
9.2-4 10:1 divider control..... 9-7
9.2-5 OD-15 block diagram..... 9-8
9.2-6 Interpolation phase meter..... 9-9

Part I: Level Meter

SPM-15

6 PRELIMINARY REMARKS

6.1 INTRODUCTION TO SERVICING

Maintenance and repair are the two main tasks involved in servicing a measuring instrument. All the necessary information is provided in the Instrument Manual, with its Operating Instructions, Service Instructions and Appendix.

The Operating Instructions provide all the necessary basic information on the instrument. Section 5 describes a brief function test and the non-electrical maintenance work.

The Service Instructions provide all the specific information required for repair work. Section 8 "Verifying important technical data" is required for both maintenance and repairs.

The information provided has been selected in such a way that an experienced technician can carry out all standard repairs. Work which is usually only necessary during the manufacture of an instrument has not been included.

The Appendix contains all the general block diagrams, circuit diagrams, electrical parts lists and component layout diagrams of the circuit boards. In addition, it provides the necessary information for reading the circuit diagrams and ordering spare parts. Also included is a list of the terms used in the Appendix in German/English/French.

6.1.1 MEASURING EQUIPMENT

The measuring equipment listed here as necessary for testing represents a recommendation only. Equivalent instruments from other manufacturers may also be used.

Instrument	Requirements	Recommended type	Manufacturer	Refer to Section for use
Level meter	50 Hz...25 MHz synthesizer output 40 to 65 MHz	SPM-19	W&G	7.5, 7.6, 7.8
Display unit	for level meter; 2 curve stores	SG-4	W&G	7.5, 7.6, 7.8
Level generator	70 Hz to 25 MHz ext. frequency and level variable	PS-19	W&G	7.5, 7.6, 7.8
Level generator with tracking generator	50 Hz to 10 MHz	SPM-15 with PSE or SPM-19/PSS-19	W&G	8.2, 8.5, 8.7, 8.8
Milliwatt power meter	50 Hz to 10 MHz accuracy ±1 mB	EPM-1 with TK-10	W&G	7.5, 7.6, 7.8, 8.2, 8.6
Bal. test probe	124 Ω, 150 Ω, 600 Ω	TKS-10, TKS-124, TKS-150, TKS-600	W&G	7.5, 7.6, 7.8, 8.2, 8.6

Instrument	Requirements	Recommended type	Manufacturer	Refer to Section for use
Attenuation set	75 Ω, DC...100 MHz 1...100 dB, 1 dB increments	D2053	Siemens	7.5, 7.8, 8.2, 8.6
Return loss meas. attachment	75 Ω, 10 kHz... 10 MHz	RFZ-5	W&G	7.8, 8.5, 8.8
Return loss meas. attachment	124/150/600 Ω 10 kHz...100 kHz	RFZ-12	W&G	7.8, 8.5, 8.8
Signal balance ratio meas. att.	124/600 Ω 10 kHz...5 MHz	SDZ-12	W&G	7.8, 8.5, 8.8
Frequency counter	50 Hz...100 MHz, $\Delta f \leq 1 \times 10^{-7}$ resolution 1 Hz	PM 6673/03	Philips	7.5, 7.8, 8.2
Active test probe	2 kHz...100 MHz	TK-11	W&G	7.5, 7.6, 7.8
Signature analyzer	HP-compatible	HP 5004/5005	HP	7.4
Logic analyzer	Advisable, not essential	-	-	7.4, 7.5
Noise level generator	6 kHz...12 kHz	RG-25	W&G	8.7
Limiting filter	12 kHz...8160 kHz	RSB 12/8160	W&G	8.7
Bandstop filter	f = 3886 kHz, $B_{rms} \geq 20$ kHz	RSS 3886	W&G	8.7
Low-pass filter	300 Hz $\leq$ fg $\leq$ 1 MHz	-	-	8.6
X-Y plotter	-	-	-	7
Oscilloscope	$\geq$ 100 MHz	-	-	7
Power supply	8...20 V/4 A	-	-	7.8.2
Variable-ratio transformer	100 V...250 V	-	-	7.8.2
Special measuring equipment:				
MONEX with adapter	refer to Section 9.5	MONEX	W&G	7
		PG 19-955	W&G	7
Current measurement adapter	-	PG 1-955	W&G	7
T branch	BNC	-	-	7, 8.2
T branch	3-pole (CF)	S 833	W&G	7, 8.4

7 NOTES ON TROUBLESHOOTING AND REPAIRS

7.1 SAFETY MEASURES

7.1.1 ELECTRICAL SAFETY

Protection class

This instrument is classified in protection class I to VDE 0411 and IEC Publ. 348. The power cord supplied contains a non-fused earthed conductor. The mains plug may only be plugged into earthed sockets unless the mains sockets are transformer isolated. The non-fused earthed conductor must not be interrupted either inside or outside the instrument.

Opening the instrument

Live parts may be exposed when covers are opened or parts removed with the aid of a tool. Connecting points may also be live.

The instrument must be disconnected from all power sources before being opened.

If it is essential to perform calibration, maintenance or repair work on the instrument when it is both open and connected to the power supply, such work must only be carried out by a trained technician who is aware of the potential danger.

Capacitors inside the instrument may still be charged, even if the instrument itself has been disconnected from all power sources; the circuit diagrams must be consulted.

Fuses

Only the specified fuses may be used.

Repairs, replacing parts

Repairs must be performed correctly. Particular care must be taken to ensure that the design features of the instrument are not altered in a manner reducing its safety. On no account must the creepage and air paths or the insulation distances be reduced.

Only use original parts as replacements. Other spare parts may only be used if they do not impair the safety characteristics of the instrument.
Refer to Section 7.1.4 for notes on ordering spare parts.

Testing after repair and maintenance work

Testing the non-fused earthed conductor

Visually check for correct connection and good condition of the conductor and measure the resistance between the plug connection of the non-fused earthed conductor and the housing. The resistance should be $< 0{,}5\ \Omega$. Move the connecting lead during this measurement. Fluctuations in the resistance are indicative of damage to the conductor.

Testing the insulation resistance

Measure the insulation resistance between the mains connections and the non-fused earthed conductor at a voltage of 500 V DC. Set the line switch on the instrument to "ON" for this purpose. The insulation resistance should be $> 2\ M\Omega$.

7.1.2 CIRCUITRY PROTECTION

Be careful when handling MOS components!

A number of MOS (metal-oxide semiconductor) components are used in this instrument. They can easily be damaged or destroyed by static charges, ripple voltages from unearthed devices or other interference voltages. Damage to the gate insulation does not always result in immediate failure of a component; in many cases, this only occurs after a certain period of operation. Damage due to static charges can be avoided by noting the following rules:

- Whenever possible, MOS components should remain in the supplier's wrapping until required. All connections must be conductively linked until used (black, electrically conductive foam).
- The electrically conductive part of the packaging must make contact with a reference potential in the form of a conductive worktop or the chassis of the instrument to be repaired before unpacking the MOS components or the circuit boards fitted with such components.
- Before touching the MOS components, touch the conductor acting as reference potential with one hand.
- All tools and instruments, the part to be repaired and the user should have the same potential as the conductor acting as the reference potential (e.g. a conductive worktop or, alternatively, the chassis of the instrument to be repaired). For this reason, first make contact between the reference potential and the tools with which the MOS components are to be handled. Tools must not have insulated handles.
- If work is being carried out on a circuit board or other instrument parts separately from the rest of the instrument and not on a conductive worktop, connect the earth of the circuit board, etc. to the reference potential.

Damage due to ripple voltages during soldering work can be avoided by establishing a permanent connection between the soldering iron and the chassis of the instrument being repaired.

MOS components include the letters MOS, CMOS or MOSFET in the component designations of the electrical parts list.

7.1.3 SOLDERING INSTRUCTIONS

It is recommendable to use thin solder with little flux. Note the following points:

- Soldering time for all components $\leq$ 5 s
- Soldering temperatures $\leq$ 260°C
- Ensure that flux is not spilled onto contact-making surfaces when soldering switch contacts or other electromechanical components.

Note on desoldering components with multiple connections:

The best method by far is to remove the solder of each individual connection by suction using special-purpose desoldering equipment. Move the connection gently back and forth while desoldering, to check that each individual connection is free. Do not use force.

Through-platings are sensitive to tensile stresses during soldering.

In the case of dual-in-line components, the circuit board can be spared a great deal of damage by cutting through the connections on the component side and desoldering them individually.

Soldering on thin-film circuits

Soldering on thin-film circuits requires exact temperature control, a very short soldering time and special-purpose tools. Using the normal procedure, the risk of destroying the circuitry is so great that we recommend replacement of the complete thin-film circuit.

7.1.4 INSTRUMENT DATA

The following data are required for enquiries and orders for spare parts relating to the instrument to be repaired:
Type designation, Series index and instrument number, model designation and any options installed.

e.g. SPM-15, Series B-0999, BN 955/01 with PSE

The item No. listed in the electrical parts list in the Appendix must also be stated when ordering spare parts.
e.g. 1 Trans. BCY59D item No. 0001-0016.518

Fig. 7.1-1 shows where the instrument data are to be found.

The software package is identified via the BV number of the signature list (refer to Fig. 7.4-1). On instruments with a drawer for the shortform Operating Instructions, the signature list is also put into this drawer. If there is no drawer, the signature list is fitted inside the instrument. An adhesive label on the rear cover plate identifies the signature list. The signature list must be supplemented or replaced when subsequently fitting additional options or using new software.

Dismantling

Undo 4 allen-head screws and lift the chassis out of the casing.

Use the 3 mm allen key, found in the compartment on the back panel.

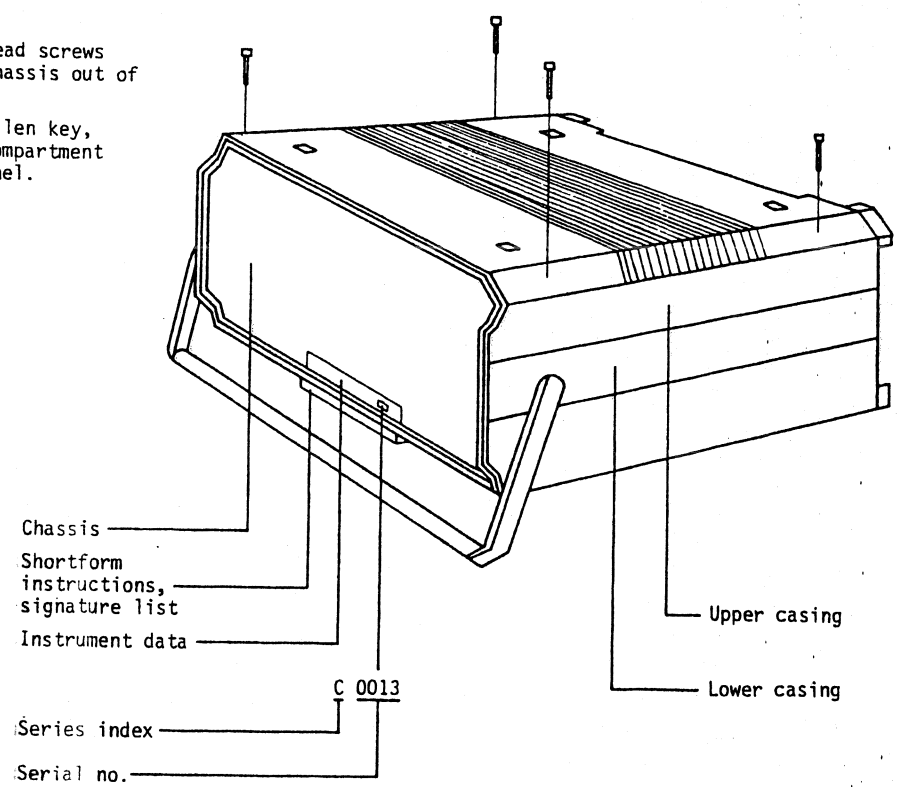

Back panel

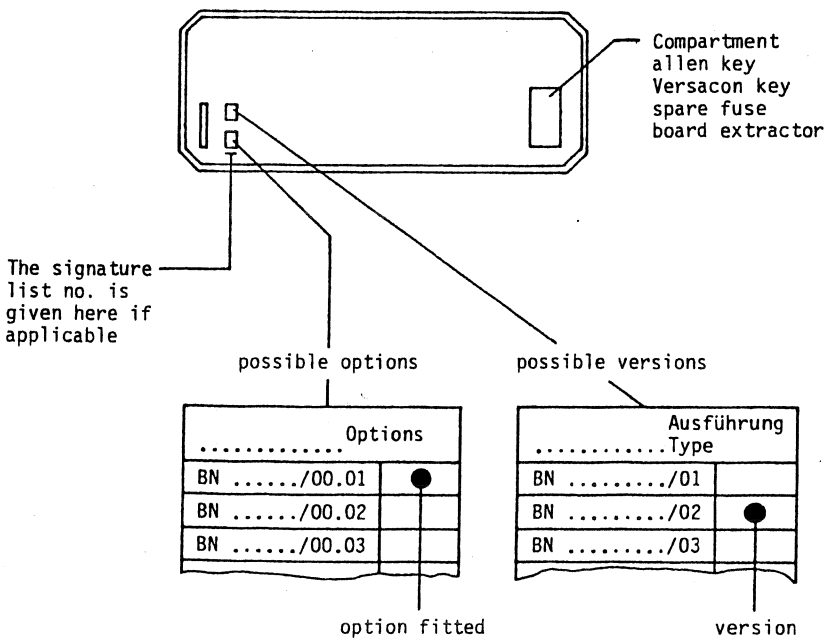

Fig. 7.1-1 Dismantling the instrument; instrument data

7.1.5 DISMANTLING THE INSTRUMENT

Removing the instrument

After undoing the four hexagon socket screws at the top and removing the top part of the housing, the instrument can be lifted up and out of the housing.

Removing the control knobs

Refer to Fig. 7.1-2.

Casings and frames

Refer to Fig. 7.1-3.

All knobs are mounted by a clamping chuck. To obtain access for removal of the knob, use a knife blade to pry off the plastic cap covering the central fastening screw or nut. Use 7 mm open end wrench.

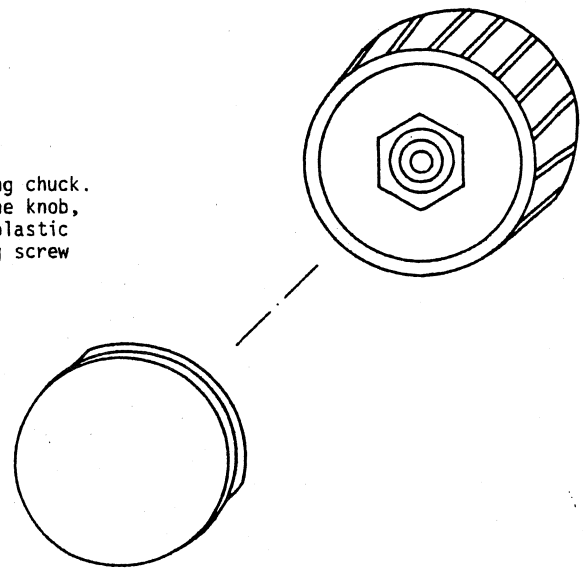

Fig. 7.1-2 Removing control knobs

Removal of cover from screening boxes and frames

The plastic handle is used to take the covers off from the frames and boxes.

Caution: replacing a cover requires attention to make sure that the thin contact fingers are not damaged.

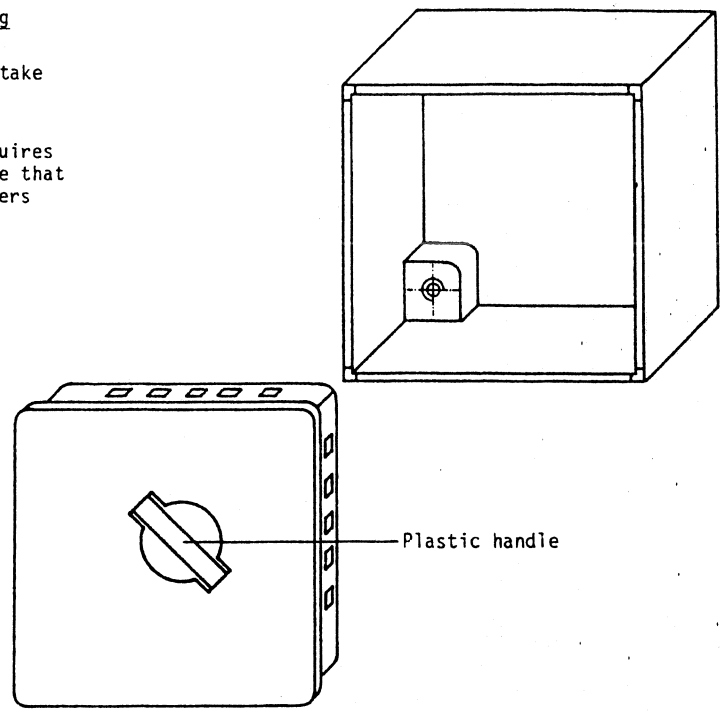

Disassembly of circuits from screening boxes and frames

The stand-off screws or spacers to which the printed circuit board is attached, and all chassis-ground screws should be removed. Then the printed circuit board is removed by the card puller.When replacing the circuit the contact pins must be protected by assuring the p.c.b. is exactly parallel to all pins before the p.c.b. is pressed home.

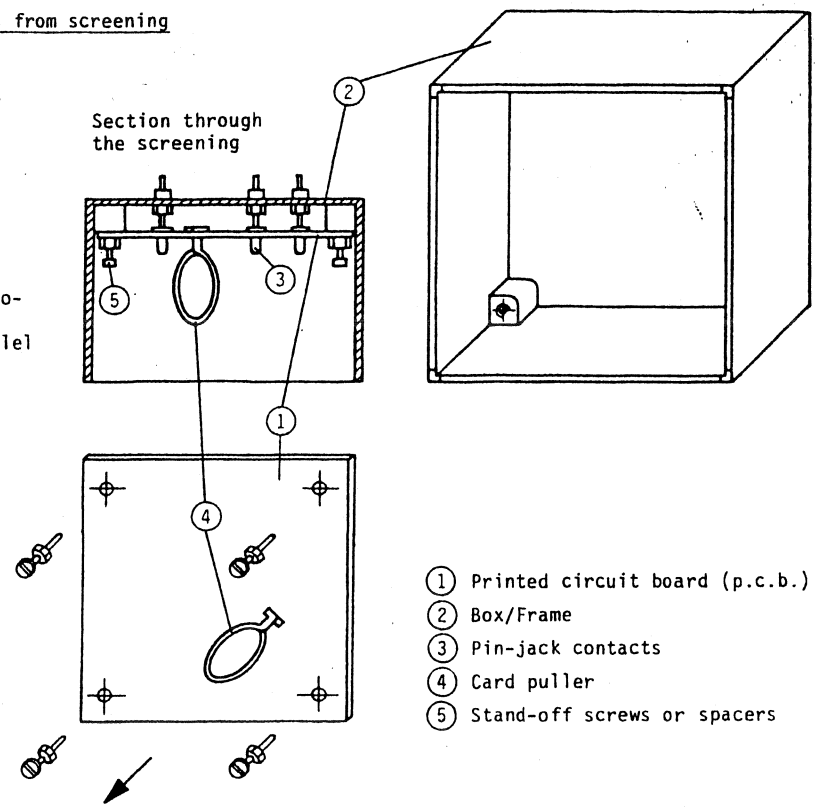

(1) Printed circuit board (p.c.b.)
(2) Box/Frame
(3) Pin-jack contacts
(4) Card puller
(5) Stand-off screws or spacers

Fig. 7.1-3 Casings and frames

7.2 LOCATION OF ASSEMBLIES, ALIGNMENT ELEMENTS, TEST POINTS

A list of assemblies can be found in Section 7.8, Fig. 7.8-2.

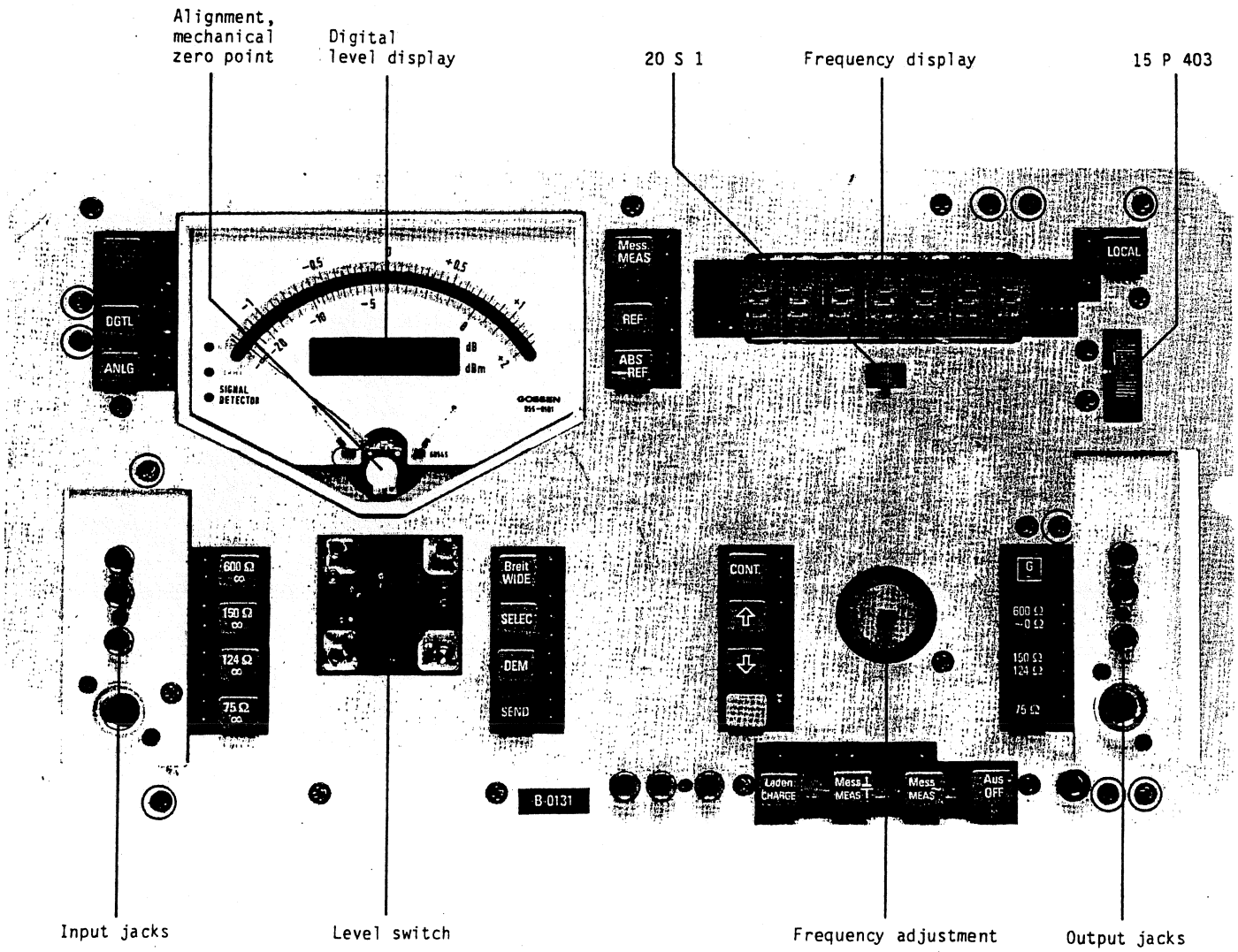

Fig. 7.2-1 SPM-15, front view

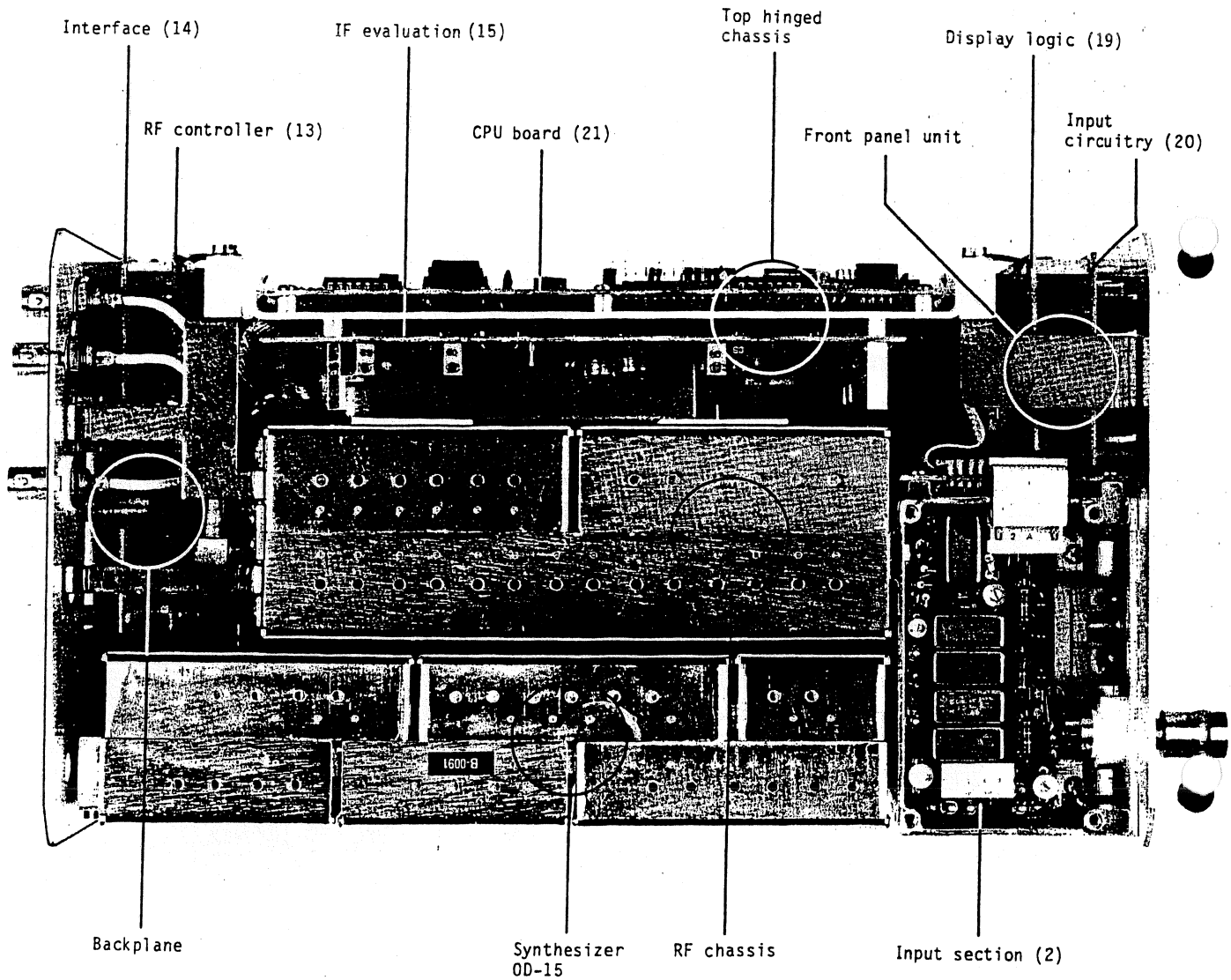

Fig. 7.2-2 SPM-15, side view from left

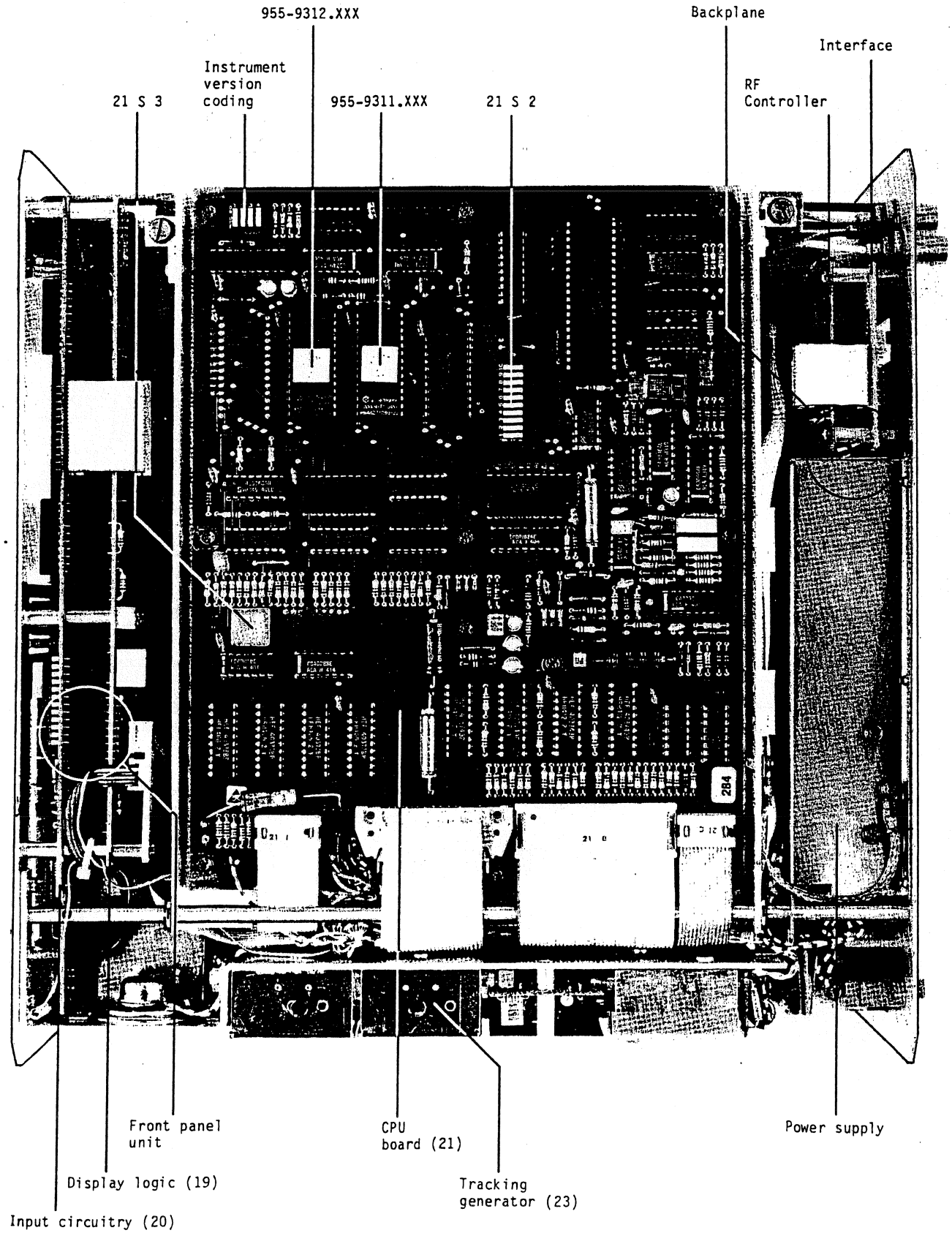

Fig. 7.2-3 SPM-15, top hinged frame from above

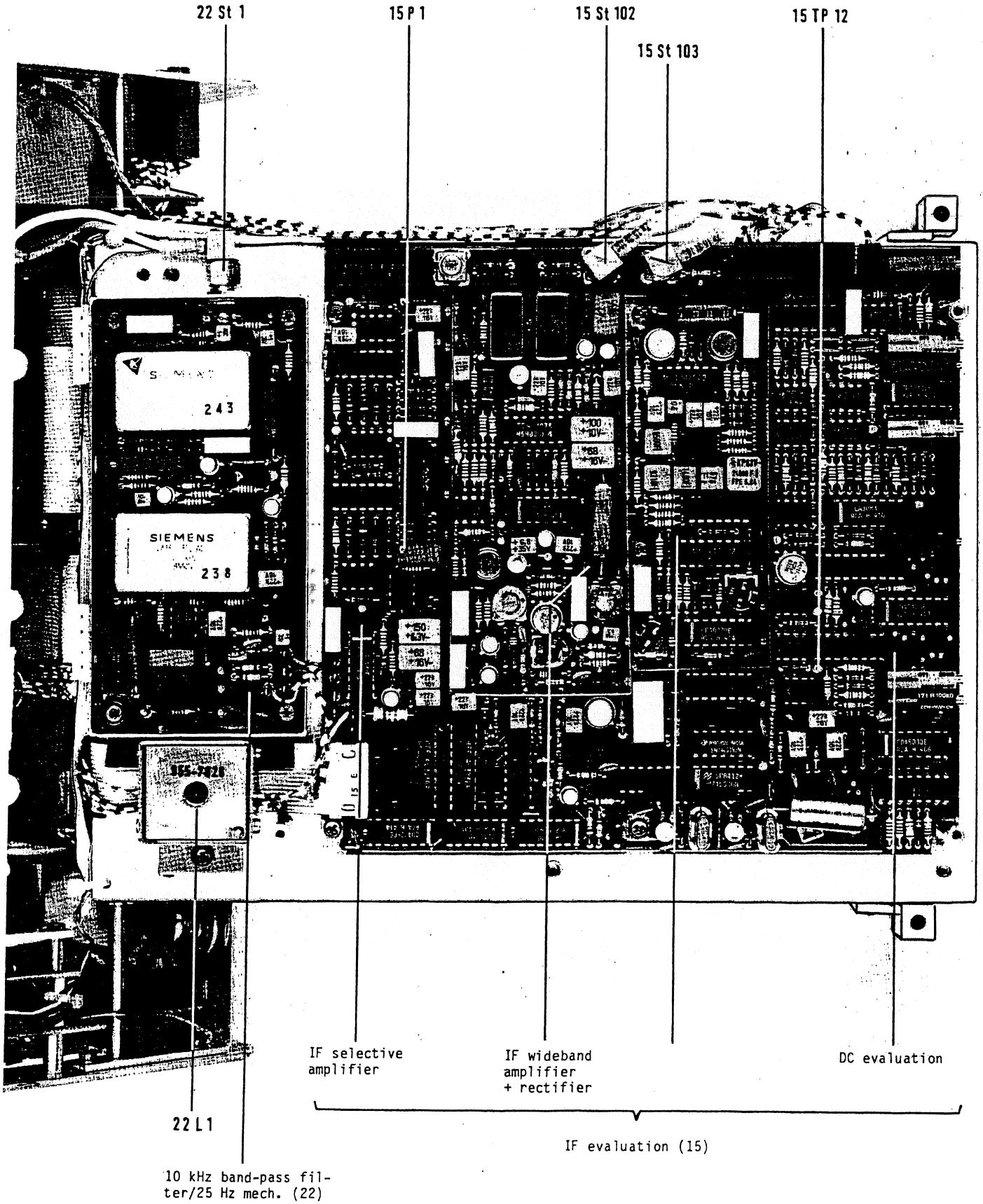

Fig. 7.2-4 SPM-15, top hinged frame from below

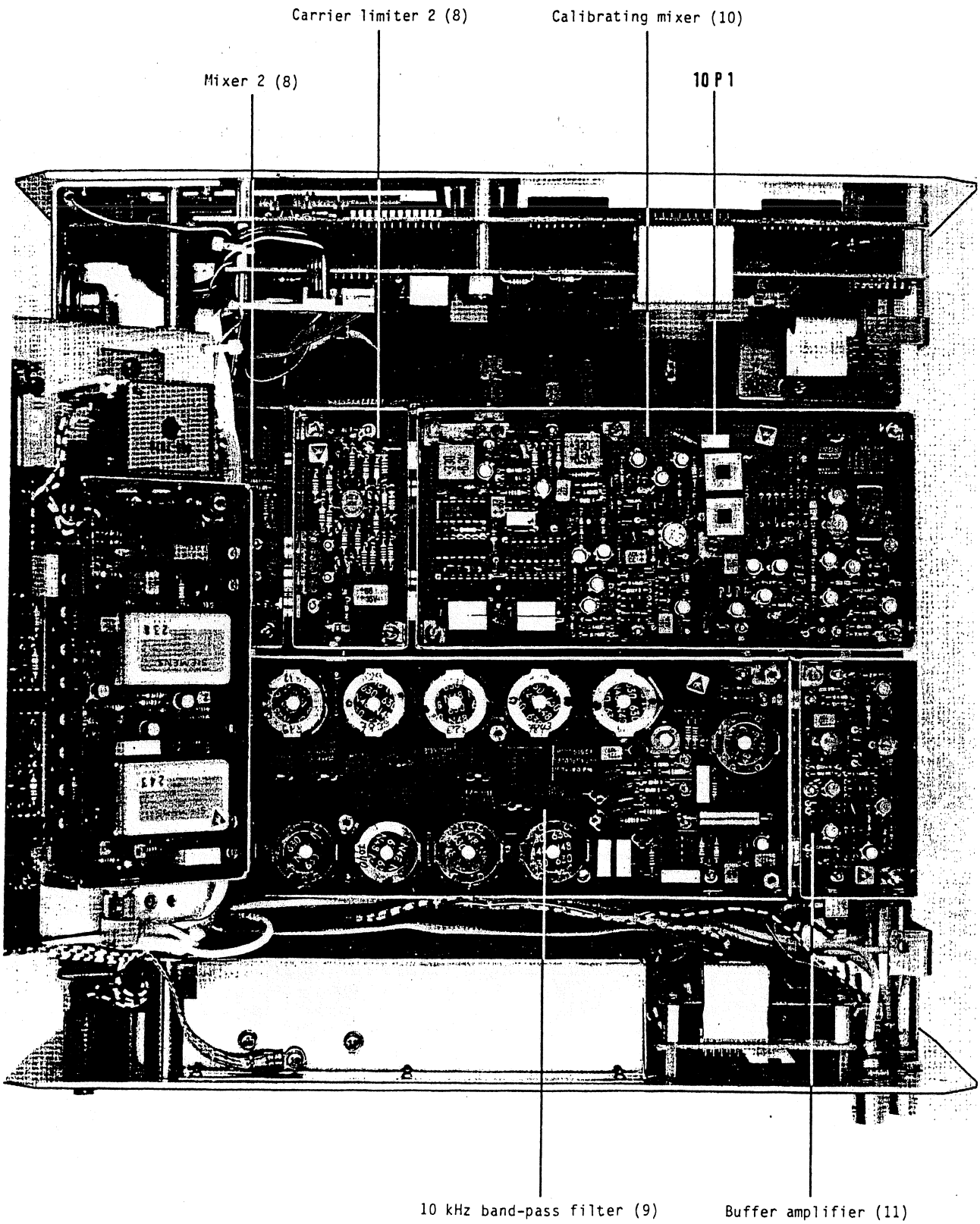

Fig. 7.2-5 SPM-15, RF chassis from above

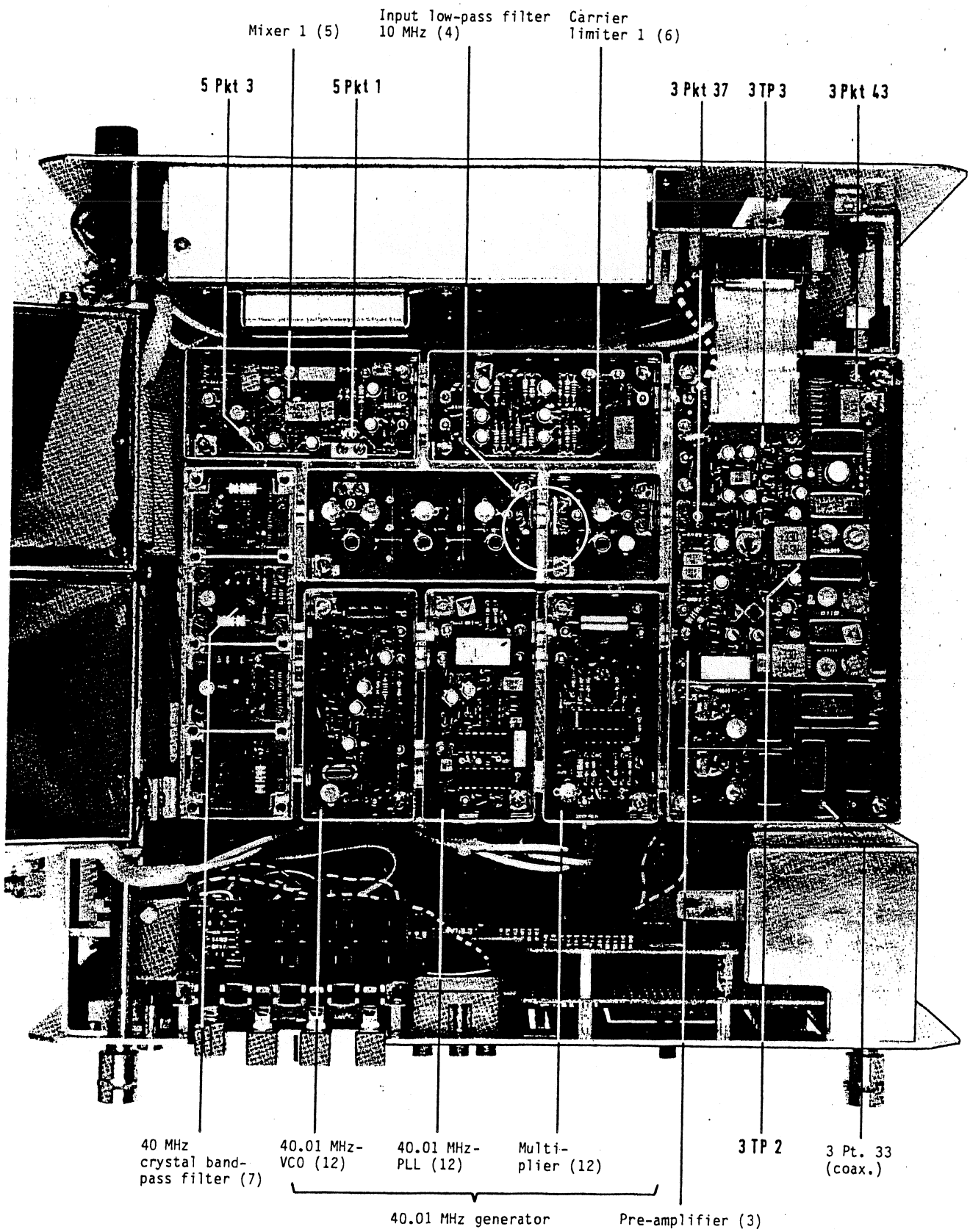

Fig. 7.2-6 SPM-15, RF chassis from below

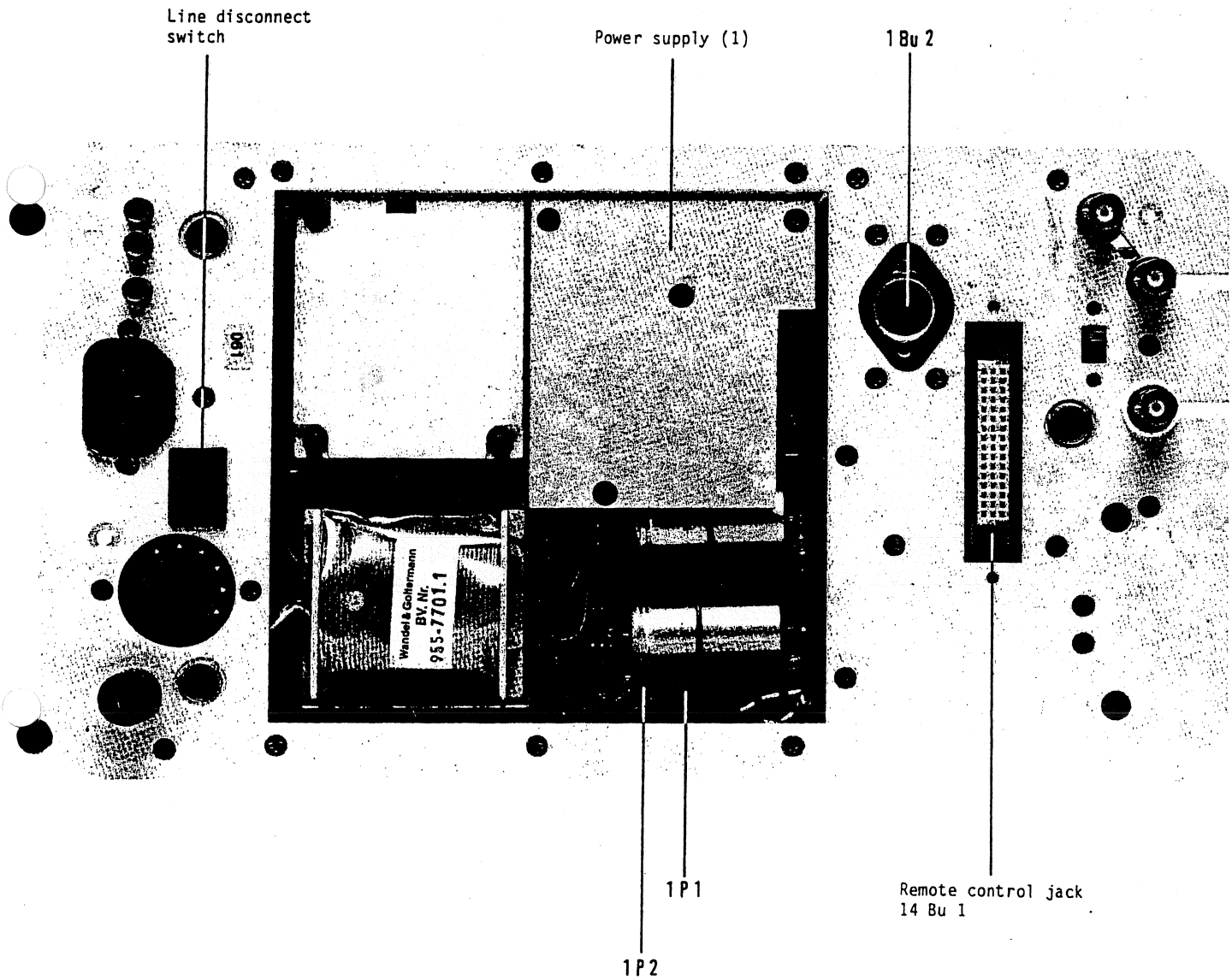

Fig. 7.2-7 SPM-15, rear instrument wall open

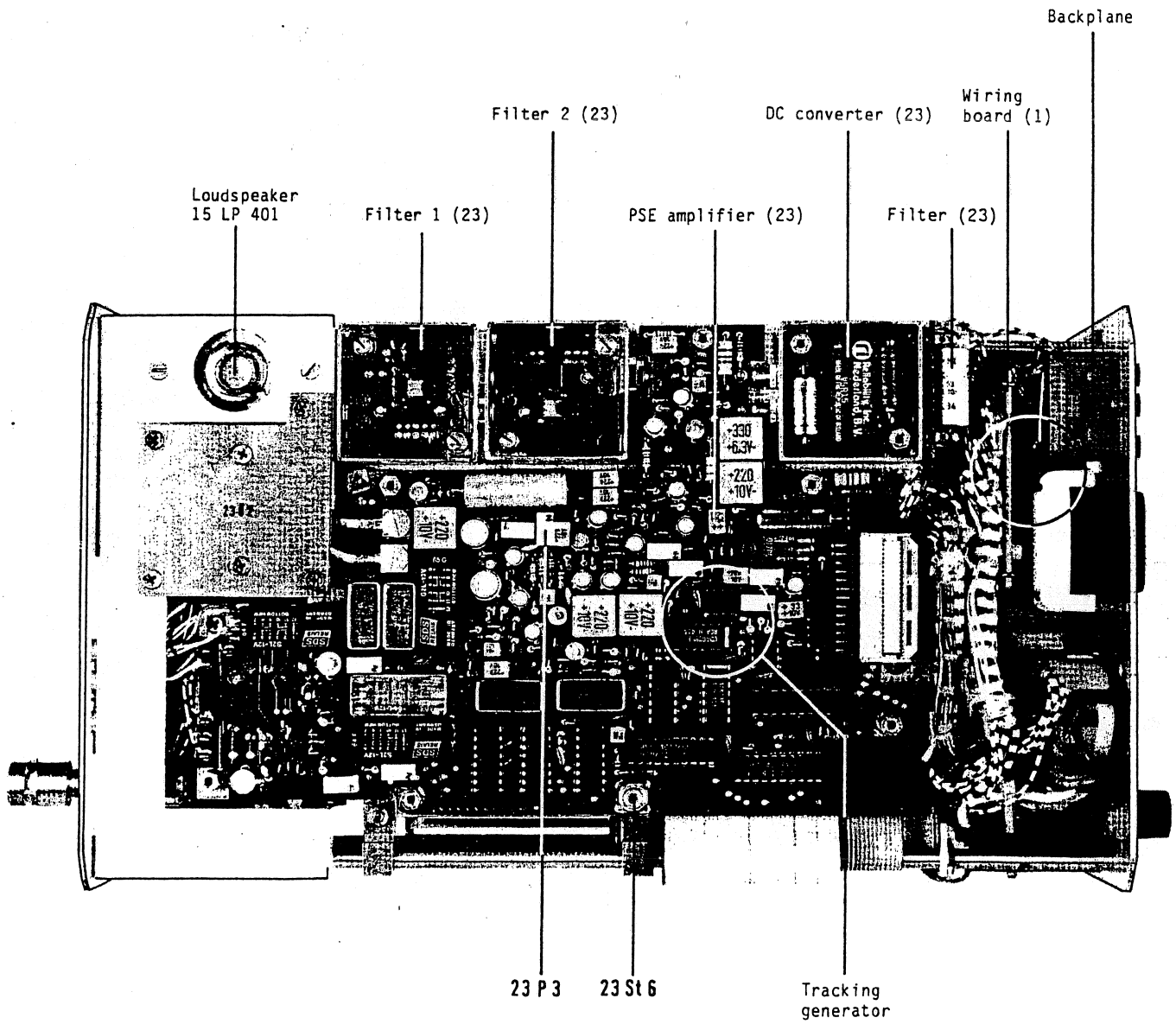

Fig. 7.2-8 SPM-15, side view from right (Series A ... D)

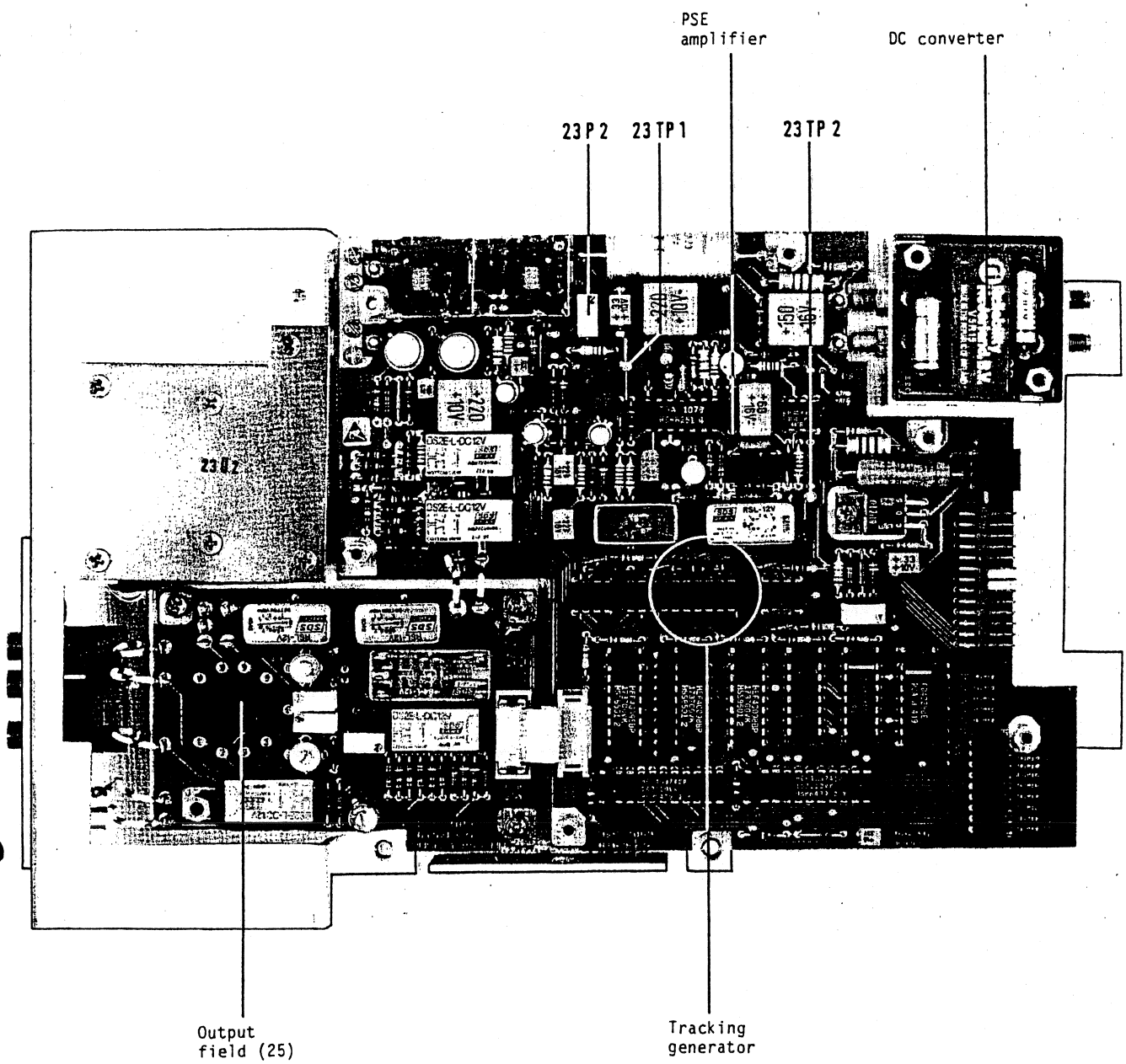

Fig. 7.2-9 SPM-15, side view from right (Series E ...)

7.3 NOTES ON TROUBLESHOOTING

7.3.1 FAULT LOCALIZATION CONCEPT

The information compiled in the following Sections is intended to facilitate the rapid localization of causes of faults.

To this end, Section 7.3.3 describes simple check measurements designed to allow localization of the cause of a fault to a function block within the SPM-15.

Further fault localization in the Power supply, Control section, Measuring section and Tracking generator modules is described in the subsequent Sections. There is a separate Service Instructions section for the Synthesizer module (OD-15).

Monitor (MONEX) functions

These functions are often used for checks and alignments. They are described in more detail in Section 9.5.

7.3.2 RESET

Following a repair or when attaching the BAZ-15, it may happen that the last instrument set-up stored in RAM is lost. The microcomputer cannot detect this when powered up. The instrument is now in an undefined state, and this may inhibit the operator keys. In such cases, it is best to perform a reset as described below:

- Remove the upper housing shell
- Press reset key 21S3 at the front of the CPU controller board.

The reset establishes a defined starting state of the instrument, this causing the standard settings described in Section 3.5.1 of the Operating Instructions to be selected.

Software reset:

In most cases, a reset can also be performed via the operator keyboard, as follows:

1. Switch off the instrument
2. Press the AUTO-CAL key
3. Hold the CAL key down and switch on the instrument
4. Release the key when the standard (default) values appear

7.3.3 LOCALIZATION OF FAULTS IN MODULES

Fig. 7.3-1 shows the modules of the SPM-15 and their interdependences.

Fault localization is carried out from the bottom upwards.

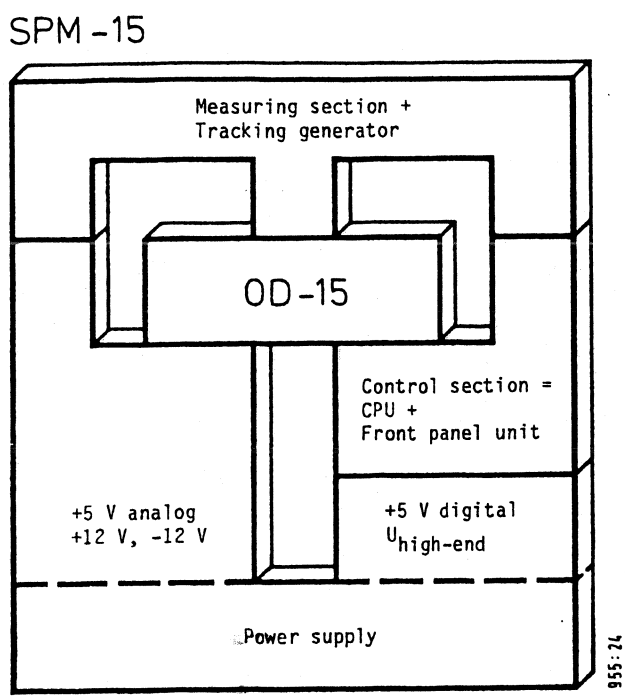

Troubleshooting described in:

Sections 7.5 and 7.6

Separate service manual for OD-15, BN 2011

Section 7.4

Section 7.7

Fig. 7.3-1 Function blocks of the SPM-15

7.3.3.1 Power supply

The output voltages of the power supply are 5 V (split into "5 V analog" and "5 V digital"), +12 V, -12 V and the high-end voltage $U_{high-end}$.

All voltages can be measured on the CPU board (21).

+5 V $\pm$ 20 mV	at 21 Pt. 4 and 7
+12 V $\pm$ 50 mV	at 21 Pt. 1
-12 V $\pm$ 50 mV	at 21 Pt. 2

$U_{high-end}$ = 25 V ... 35 V (for line operation) at 21 Pt. 6 = 21 TP 13

If a voltage is out of tolerance, first check the power supply in accordance with Section 7.7.

If the power supply is functioning correctly, all circuits connected to the voltage in question must be successively eliminated as the possible cause of the fault.

Using Fig. 7.3-2 (wiring of the supply voltages; refer to the end of the Service Instructions for the SPM-15), it is easy to find the points at which assemblies can be specifically disconnected from the power supply.

7.3.3.2 Control section (CPU and front panel unit)

First disconnect the instrument without IEC bus and BAZ-15 from the line voltage and then switch on again.

The frequency display then allows localization of the fault according to the following Table:

<table>
<tr><td colspan="2">0-000 or 0-300 and higher</td><td>0-200, 0-1xx or 0-400</td><td>Arbitrary, meaningless display</td></tr>
<tr><td rowspan="2">Basic instrument setting:
f = 100 kHz
20 dB scale, -0.00
75 Ω, ABS, 3.1 kHz
CRSE, LOCAL, PSE OFF</td><td>Basic setting, but individual bars of the digits or LEDs faulty</td><td>CPU faulty</td><td>CPU or front panel unit faulty</td></tr>
<tr><td>Continue with 7.4.3 (Front panel unit)</td><td>Continue with 7.4.1 (CPU)</td><td>Continue with Section 7.4 (Control section)</td></tr>
<tr><td colspan="2">Check a few keys, level switch and frequency setting</td><td colspan="2" rowspan="3">If faulty, first check all bus connectors</td></tr>
<tr><td>If functioning correctly</td><td>If faulty</td></tr>
<tr><td>Control section OK</td><td>Continue with 7.4.3 (Front panel unit)</td></tr>
</table>

7.3.3.3 OD-15 (synthesizer)

The OD-15 of the SPM-15 has two outputs:

- 10 MHz standard frequency at [33] = 51 Bu 3
- Carrier frequency 40 ... 50 MHz at [34] = 11 Bu 1

The frequency accuracy and compliance with the level tolerances can easily be checked:

[33]: 10 MHz ± 10 Hz; 0 dBm/75 Ω ± 2 dB

[34]: 40 MHz ± 40 Hz; when tuned to 0 Hz

49.999999 MHz ± 50 Hz; when tuned to 9999.999 kHz

40 ... 50 MHz ; -6 dBm/75 Ω ± 2 dB

≙ (75 Ω terminating impedance) 200 mV peak ± 30 mV

This output is fed from the buffer amplifier (11).

If the data lines between the CPU and the OD-15 are faulty, certain frequencies are in fact not set, although they appear correctly on the frequency display. For complete functional testing, the numbers 0, 1, 2, 4, 8 must be checked for each frequency digit.

If the OD-15 is faulty: refer to the separate Service Instructions section for the OD-15.

7.3.3.4 Measuring section and tracking generator

Section 7.5.1 provides general information on troubleshooting in the measuring section.

Section 7.6.1 provides general information on troubleshooting in the tracking generator.

7.3.3.5 Summary of fault and message numbers

Control section:

0----	Self-test running
0-000	Self-test OK
0-10X	RAM fault
0-200	ROM fault
0-400	I/O fault
0-300	Battery/line voltage missing or too low, refer to Operating Instructions, Section 3.5

Analog section:

1-201	Fault in measuring path for ANLG measurement
1-202	Fault in measuring path for DGTL measurement
2-107	Measuring range unsuitable for (ABS-REF)
2-222	Frequency unsuitable for demodulator operation

Remote control:

4-XXX 5-XXX	Programming error in computer operation Refer to Operating Instructions, Section 6.4.6

7.4 TROUBLESHOOTING IN THE CONTROL SECTION

7.4.1 TROUBLESHOOTING ON THE CPU

The SPM-15 automatically performs a self-test on the control section after power-up.

Activation: - Switch off instrument
- Switch on instrument

A continuous self-test can also be carried out.

Activation: - Switch off instrument
- Set 21 S 1.1 to OFF
  Set 21 S 1.2 - S 1.4 to ON
- Switch on instrument

Display while test running: 0--.--
Test OK : 0-0.00

If no fault is detected, the test is repeated continuously if the continuous test has been selected. The display alternates between 0--- und 0-000.

Fault numbers: EPROM fault : 0-2.00
RAM fault : 0-1.0X
I/O fault : 0-4.00

Refer to Section 7.4.1.1 if any of these fault numbers appear in the frequency display. Otherwise, perform troubleshooting in accordance with Section 7.4.1.2.

7.4.1.1 Troubleshooting on the CPU with more accurate definition of the fault

<table>
<tr><td colspan="3">Ø-2ØØ in frequency display?</td></tr>
<tr><td>Yes</td><td colspan="2">No</td></tr>
<tr><td rowspan="3">EPROM signature as per 7.4.1.5</td><td colspan="2">0-1XX in freq. display?</td></tr>
<tr><td>Yes</td><td>No</td></tr>
<tr><td rowspan="2">RAM stimulus as per 7.4.1.6</td><td>Free-running I/O address as per 7.4.1.7</td></tr>
<tr><td>I/O stimulus as per 7.4.1.8</td></tr>
</table>

7.4.1.2 Troubleshooting on the CPU without more accurate definition of the fault

<table>
<tr><td colspan="3">Switch off instrument</td></tr>
<tr><td colspan="3">Disconnect plugs 21 St a, 21 St b, 21 St c and 21 St e from CPU</td></tr>
<tr><td colspan="3">Switch on instrument</td></tr>
<tr><td colspan="3">Measure voltage at 21 IC 21, Pin 40 (microprocessor)</td></tr>
<tr><td colspan="3">5 V ± 100 mV voltage OK?</td></tr>
<tr><td>Yes</td><td colspan="2">No</td></tr>
<tr><td rowspan="3"></td><td colspan="2">Check voltage monitor with the aid of circuit diagram 21</td></tr>
<tr><td colspan="2">Reconnect plug 21 St a to CPU</td></tr>
<tr><td colspan="2">Recommence troubleshooting on CPU at 7.4.1</td></tr>
<tr><td colspan="3">Read Section 7.4.1.3 Signature analysis</td></tr>
</table>

Operate processor in free-running mode as per Section 7.4.1.4

Frame signature OK?

Yes

No

Check switch position of 21 S 2

Check CLOCK, START, STOP and GROUND connections of signature analyzer

Check the following signals on the microprocessor with the oscilloscope

Clock	Pt. 37	
TRAP	Pt. 6	LOW
HOLD	Pt. 39	LOW
RESET IN	Pt. 36	HIGH

Check signatures of address lines AØ ... A15

Signatures OK?

Yes

No

Check address driver and latches (21 IC 18 ... 21 IC 20, 21 IC 23 ... 21 IC 25), e.g. short to +5 V or chassis, mutual short

Reconnect plug 21 St a to CPU

Recommence troubleshooting on CPU at 7.4.1

Carry out RAM stimulus as per 7.4.1.6

Signatures OK?

Yes

No

Check RAM activation

RAM activation OK?

Yes

No

Replace RAM

Reconnect plug 21 St a to CPU

Recommence troubleshooting on CPU at 7.4.1

Check I/O section

Carry out free I/O address run as per 7.4.1.7	
Signatures OK?	
Yes	No
	Check I/O address activation (21 IC 9, 21 IC 3 ... 21 IC 5, 21 IC 1)
Carry out program-controlled I/O stimulus as per 7.4.1.8	
Signatures OK?	
Yes	No
	Check I/O data section (21 IC 10, 21 IC 2, 21 IC 4/1, 21 IC 3/1)
CPU check complete, continue with 7.3	

7.4.1.3 Signature analysis with the hp 5004A or 5005A

The signature analyzer (e.g. hp 5004A) is an instrument allowing unambiguous and simple checking of digital signal strings of any desired length. In order to obtain constant signatures (four digits, quasi-hexadecimal notation), there must be defined and repeatable bit patterns on the lines or points to be tested in relation to a time window = START/STOP frame. The microprocessor does not produce these bit patterns automatically, but must be forced to do so. For instance, switch 21 S 2 is used to connect the data lines D0 ... D7 on the CPU to +5 V, line D7 also being connected to the READ signal via a Schottky diode. The free-running instruction is, therefore, 7FH = MOV A, A, this causing the microprocessor to run through the entire address range from 0000H to FFFFH. Each address line yields an unambiguous signature when this is done.

The most significant address bit A15 can, for example, be used as the time window. A signal fulfilling the time condition is used as the CLOCK signal, e.g. the signal RD for the "8085".

The temporal assignment of the signals CLOCK, DATA, START and STOP must always be correct, since unstable signatures may otherwise occur.

Two important signatures deserve a brief explanation:

- The signature of the 0 V line is always 0000, irrespective of the START/STOP frame.
- The signature of the +5 V line is the so-called "FRAME SIGNATURE". The signature of the CLOCK pulses read in within the START/STOP frame is displayed here.

The frame signature can be used to check whether the START/STOP frame is connected correctly and whether the edges for the START/STOP frame are correct.

In addition, it may also be assumed that the microprocessor is working.
If the signature 0000 occurs, the line is shorted to chassis.
If the frame signature occurs, this indicates a short to the supply voltage.

7.4.1.4 Free processor run

Set 21 S 2.1 ... 21 S 2.9 to OFF
Set 21 S 2.10 to ON

Synchronization connections:	START	STOP	CLOCK	Chassis
	21 TP 8	21 TP 8	21 TP 2	21 TP 10

Synchronization setting:

Frame/H - Signature - Test point HS: 755U

Signatures recorded:	Test point	Signature
	A0	H335
	A1	C113
	A2	7050
	A3	0772
	A4	C4C3
	A5	AA08
	A6	7211
	A7	A3C1
	A8	7707
	A9	577A
	A10	HH86
	A11	89F1
	A12	AC99
	A13	PCF3
	A14	1180
	A15	0000

Synchronization connections:	START	STOP	CLOCK	Chassis
	21 TP 8	21 TP 8	21 TP 2	21 TP 10

Synchronization setting: 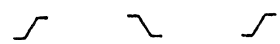

Frame/H - Signature - Test point HS: 755U

Signatures recorded:	Test point	Signature
	A0	H335
	A1	C113
	A2	7050
	A3	0772
	A4	C4C3
	A5	AA08
	A6	7211
	A7	A3C1
	A8	7707
	A9	577A
	A10	HH86
	A11	89F1
	A12	AC99
	A13	PCF3
	A14	1180
	A15	755U

7.4.1.5 EPROM signature

Switch on instrument
Set 21 S 2.1 ... 21 S 2.9 to OFF
Set 21 S 2.10 to ON

Synchronization connections:	START	STOP	CLOCK	Chassis
EPROM 0	21 TP 4	21 TP 4	21 TP 2	21 TP 10
EPROM 1	21 TP 6	21 TP 6	21 TP 2	21 TP 10
EPROM 2	21 TP 7	21 TP 7	21 TP 2	21 TP 10

Synchronization setting: ⌝ ⌞ ⌞

Frame/H - Signature - Test point HS: Only Series A P254
From Series B 1180

Signatures recorded: refer to associated signature lists.

The signature list of the corresponding software is attatched inside the drawer for the shortform Operating Instructions on the SPM-15.

Example:

Bv. Nummer	D0	D1	D2	D3	D4	D5	D6	D7
955-9313.032	4H3A	6153	4982	2H6A	279U	7127	542P	0110
955-9312.130	6206	H7H2	9640	FP5C	U5P6	23A7	7U7F	3C95
955-9311.131	C4H1	UAC0	8985	A2CC	F21A	U3CC	F427	5350
Signaturliste	Sach-Nr. 955-0093.174					Dat.: 12.09.86		

Software series designation

Fig. 7.4-1 Example of a signature list

7.4.1.6 RAM stimulus

Switch off instrument
Set 21 S 2.1 ... 21 S 2.9 to ON
Set 21 S 2.10 to OFF
Set 21 S 1.1 to ON
Set 21 S 1.2 to OFF
Set 21 S 1.3 to ON
Set 21 S 1.4 to ON
Switch on instrument

Display while test running: --1.00

Synchronization connections:	START	STOP	CLOCK	Chassis
	21 TP 3	21 TP 3	21 TP 9	21 TP 10

Synchronization setting: ⌝ ⌞ ⌝

Frame/H - Signature - Test point HS: AHA4

Signatures recorded: Test point	Signature
D0	P6C6
D1	CH7A
D2	2UU2
D3	743P
D4	1OHP
D5	4C12
D6	H99A
D7	8256

7.4.1.7 Free I/O address run

Free-running I/O address operation is carried out with forced I/O operation.

Set 21 S 4 to T position (return to M position at end of test)
Set 21 S 2.1 ... 21 S 2.9 to OFF
Set 21 S 2.10 to ON

Synchronization connections:	START	STOP	CLOCK	Chassis
	21 TP 8	21 TP 8	21 TP 2	21 TP 10
Synchronization setting:	⌝	⌞	⌞	

Frame/H - Signature - Test point HS: 755U

Signatures recorded: Test point	Signature
A0	H335
A1	C113
A2	7050
A3	0772
A4	C4C3
Negated A0	A66A
Negated A1	F44F
Negated A2	050U
Negated A3	722H
Negated A4	F1PF
Negated A5	HU57
Negated A6	074P
Negated A7	H6PP

7.4.1.8 Program-controlled I/O stimulus

Switch off instrument

Set 21 S 2.1 ... 21 S 2.9 to ON
Set 21 S 2.10 to OFF
Set 21 S 1.1 to OFF
Set 21 S 1.2 to OFF
Set 21 S 1.3 to ON
Set 21 S 1.4 to ON

Switch on instrument

Display while test running: --4.00

Synchronization connections:	START	STOP	CLOCK	Chassis
	21 TP 5	21 TP 5	21 TP 1	21 TP 10
Synchronization setting:	⌞	⌝	⌞	

Frame/H - Signature - Test point HS: 0UP7

Signatures recorded: Test point	Signature
D0	055H
D1	098P
D2	0113
D3	0HF0
D4	0669
D5	0ACA
D6	0227
D7	0PU4

7.4.1.9 Program-controlled synthesizer stimulus

Switch off instrument

Set 21 S 2.1 ... 21 S 2.9 to ON
Set 21 S 2.10 to OFF
Set 21 S 1.1 to ON
Set 21 S 1.2 to ON
Set 21 S 1.3 to OFF
Connect 21 IC 38.7 to 21 IC 40.3
Set 21 S 1.4 to ON

Switch on instrument

Display while test running: --5.00

Synchronization connections:	START	STOP	CLOCK	Chassis
	21 IC 38.7	21 IC 38.4	21 IC 4.12	21 TP 10
Synchronization setting:	⎍	⎍	⎎	

Frame/H - Signature - Test point HS: 000U

Signatures recorded:	Test point	Signature
	21 St b Pt. 1	000A
	21 St b Pt. 2	0009
	21 St b Pt. 3	000A
	21 St b Pt. 4	0005
	21 St b Pt. 5	0006
	21 St b Pt. 6	000F
	21 St b Pt. 7	0005
	21 St b Pt. 8	000A
	21 St b Pt. 9	0003
	21 St b Pt. 10	0006
	21 St b Pt. 11	000A
	21 St b Pt. 12	0005
	21 St b Pt. 13	0009
	21 St b Pt. 28	000H
	21 St b Pt. 29	0001
	21 St b Pt. 30	000P
	21 St b Pt. 31	0002
	21 St b Pt. 32	000C
	21 St b Pt. 33	0002
	21 St b Pt. 34	000H
	21 St b Pt. 35	0004
	21 St b Pt. 36	0007
	21 St b Pt. 37	0004
	21 St b Pt. 38	000C
	21 St b Pt. 39	0008
	21 St c Pt. 4	000F
	21 St c Pt. 5	0008
	21 St c Pt. 6	000P
	21 St c Pt. 13	0007
	IC 50.12	0003
	IC 50.15	0005
	IC 50.16	0001

7.4.1.10 Switch settings of 21 S 1 and 21 S 2

Operating mode S 1	S 1.4	S 1.3	S 1.2	S 1.1	MODEL / OPTION
Test:					
CPU test	ON	ON	ON	OFF	-
RAM test	ON	ON	OFF	ON	-
I/O test	ON	ON	OFF	OFF	-
Synthesizer test	ON	OFF	ON	ON	-
IEC bus test	ON	OFF	ON	OFF	-
(Operating):					
European with PSE	ON	ON	ON	ON	/00.02
WECO with PSE, 135 Ω, dBrnC	ON	OFF	OFF	ON	/02
WECO w/out PSE, 135 Ω, dBrnC	ON	OFF	OFF	OFF	-
European with PSE, dBrnC	OFF	ON	ON	ON	/00.02 + /00.23
European with PSE, 135 Ω	OFF	ON	ON	OFF	/00.02 + /00.21
European with PSE, 135 Ω, dBrnC	OFF	ON	OFF	ON	/00.02 /00.21 /00.23
European w/out PSE, dBrnC	OFF	OFF	ON	ON	/00.23
European w/out PSE, 135 Ω	OFF	OFF	ON	OFF	/00.21
European w/out PSE, 135 Ω, dBrnC	OFF	OFF	OFF	ON	/00.21 + /00.23
European w/out PSE	OFF	OFF	OFF	OFF	-

Free-running switch S2	Operating: S 2.1 ... S 2.9 ON S 2.10 OFF
	Free-running: S 2.1 ... S 2.9 OFF S 2.10 ON

7.4.2 RF CONTROLLER

Check the operation of the address lines 84H and 85H with the aid of the MONEX and the program in Section 9.5.6.	
OK?	
Yes	No
	Check 84H and 85H addressing (13 IC 1, 13 IC 4)
Check the data latches with the aid of the program in Section 9.5.6 (13 IC 5, 7)	
OK?	
Yes	No
	Check data latches
Check drivers 13 IC 2, 13 IC 3 and 13 IC 6	

7.4.3 TESTING THE FRONT PANEL FUNCTIONS

The interrupt logic, level switch logic, frequency adjustment, LED activation and display logic are checked by operating the front panel and observing the resultant reactions.

If the fault on the front panel is already more closely defined, proceed immediately with the subsequent Sections. The symptoms of faults in the LED display must be observed during the self-test, as soon as the instrument is powered up.

Localized fault	Section
LED display faulty	7.4.3.1
A segment is missing in all 7-segment displays	7.4.3.1 from Front panel data flow and segment drivers
No LEDs illuminated in one column (e.g. REF, PSE, 25 Hz, 124 Ω)	7.4.3.1 from Front panel data flow and segment drivers
1 digit is not displayed	7.4.3.1 Front panel address flow
LEDs of one row (e.g. 75 Ω/75, 124 Ω/124, 150 Ω/150, 600 Ω/600)	7.4.3.1 Front panel data flow
Keyboard cannot be operated	7.4.3.2, 7.4.3.3
Interrupt cannot be reset	7.4.3.3
Level switch fails to react	7.4.3.4
Frequency cannot be changed	7.4.3.5

Coarse localization of the front panel fault

Leave the instrument switched on and pull out the plug	
Plug in the instrument	
100000 must appear in the frequency display -0.00 must appear in the level display Only the following LEDs may light up 75 Ω, 20 dB, ABS, 3,1 kHz, Coarse, LOCAL, PSE Off	
Is the status as described above?	
Yes	No
	Check LED activation; refer to Section 7.4.3.1
Press "Selec" key	
Key reaction (1.74 kHz reacts)?	
Yes	No
	Examine interrupt logic; refer to Section 7.4.3.2
	Examine keyboard logic; refer to Section 7.4.3.3

Turn level switch to right	
Does level display change to -10.00?	
Yes	No
	Examine level switch logic; refer to Section 7.4.3.4
Turn level switch to left	
Does level display change to 0.00?	
Yes	No
	Examine level switch logic; refer to Section 7.4.3.4
Turn frequency switch to right	
Is frequency display incremented?	
Yes	No
	Examine frequency adjustment; refer to Section 7.4.3.5
Turn frequency switch to left	
Is frequency display decremented?	
Yes	No
	Examine frequency adjustment; refer to Section 7.4.3.5

Connection points for signature analysis

Frame signature: 7U39H

Start: 20IC15, Pin 11 ⎍

Stop: 20IC15, Pin 15 ⎍

Clock: 19 IC 37, Pin 3 ⎍

7.4.3.1 Check LED activation

LED activation can best be checked with the aid of the "MONEX", since it allows the gates to be set and reset individually.

Basic clock and data bus latches

Measure clock at 19 IC 37, Pt. 3	
Is the set value of 1.6 kHz ± 10% reached?	
Yes	No
	Possibly faults in 19 IC 37, supply voltage missing
Measure clock at 19 IC 36	
Is the clock at Pin 6 = 800 Hz, Pin 11 = 400 Hz, Pin 14 = 200 Hz, Pin 2 = 100 Hz ± 10%?	
Yes	No
	Possibly faults in 19 IC 36, 19 IC 27/2, 19 IC 25
Connect 19 IC 25, Pt. 6 to +5 V Use the program in Section 9.5.6 to check the operation of the data lines of address 44H = 19 IC 12	
Can all data lines be switched from L to H and/or from H to L?	
Yes	No
	Possibly faults in: Addressing 19 IC 2, 19 IC 8, 19 IC 11/1, IC 3/1, data lines 19 IC 1, 19 IC 2, buffer 19 IC 12, internal bus 19 IC 18, 19 IC 21, 19 IC 23, 19 IC 20, 19 IC 26
Check address 45H = 19 IC 13	
Can all data lines be switched from L to H?	
Yes	No
	Possibly faults in: Addressing 19 IC 2, 19 IC 8, 19 IC 11/2, data lines 19 IC 13
Check address 46H = 19 IC 9	
Can all data lines be switched from L to H?	
Yes	No
	Possibly faults in: Data lines 19 IC 9, addressing 19 IC 2, 19 IC 8, 19 IC 11/3

RAM controller

Checking the RAM controller necessitates the use of a

Signature analyzer
Logic analyzer or multi-channel oscilloscope

Signatures are always recorded and/or signal profiles observed at defined points; depending on their behaviour, further conclusions can then be drawn as to the nature of the fault.

The signatures recorded apply for the basic setting following initialization after pressing the reset key. The signatures in brackets only apply for software version A, 955-9311.005/955-9312.004.

Address flow, display logic

If unfamiliar with the signature analyzer: read Section 7.4.1.3	
Test point	Related signature
19 IC 36 Pin 6	2AP8
19 IC 36 Pin 11	19A7
19 IC 36 Pin 14	078C
19 IC 36 Pin 2	007U
Signatures OK?	
Yes	No
	Fault in 19 IC 37, 19 IC 36
19 IC 18 Pin 1	0000
19 IC 18 Pin 2	007U
19 IC 18 Pin 3	078C
19 IC 18 Pin 4	19A7
19 IC 18 Pin 5	2AP8
19 IC 17 Pin 2	007U
19 IC 17 Pin 6	078C
19 IC 17 Pin 9	19A7
19 IC 17 Pin 13	2AP8
Signatures OK?	
Yes	No
	Line interruptions
19 IC 17 Pin 3	7U46
19 IC 17 Pin 4	78C2
19 IC 17 Pin 10	669P
19 IC 17 Pin 11	2AP8
19 IC 19 Pin 1	2052
Signatures OK?	
Yes	No
	Fault in 19 IC 17, 19 IC 19/1

Check signal profile of RAM controller

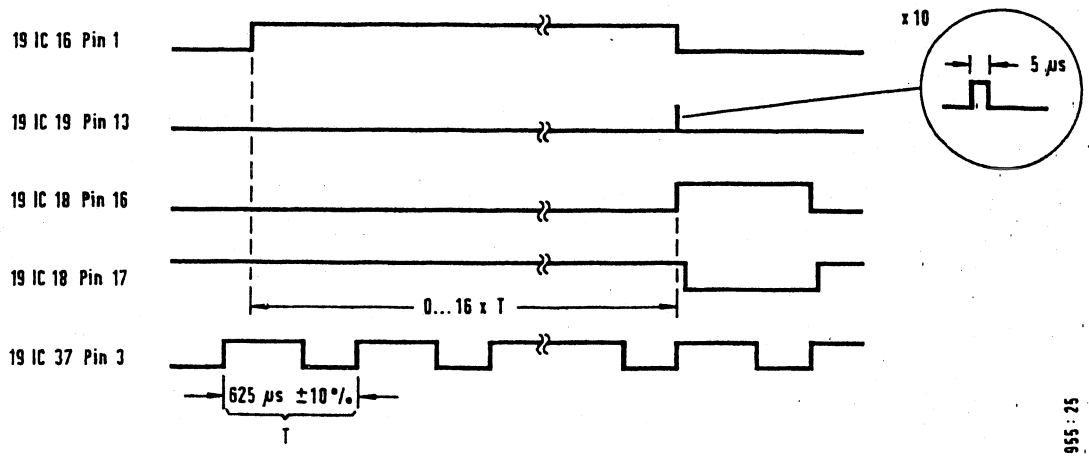

Fig. 7.4-2 Clock profile of RAM controller

Data flow on display logic

Check signatures	
19 IC 18 Pin 6	5857 (5148)
19 IC 18 Pin 7	5167
19 IC 18 Pin 8	7U27
19 IC 18 Pin 10	7U25
19 IC 18 Pin 11	0028
19 IC 18 Pin 12	1009
19 IC 18 Pin 13	0020
19 IC 18 Pin 14	0072

Signatures OK?	
Yes	No
	Fault in RAM 19 IC 18

Check signatures	
19 IC 21 Pin 3	0072
19 IC 21 Pin 5	0020
19 IC 21 Pin 7	1009
19 IC 21 Pin 9	0028

Signatures OK?	
Yes	No
	Line interruptions, 19 IC 21 defective 19 IC 21 Pin 1 not LOW, 19 IC 33 Pin 1 not HIGH

Check signatures	
19 IC 27 Pin 10	1029
19 IC 26 Pin 4	5167
19 IC 26 Pin 10	5167
Signatures OK?	
Yes	No
	Line interruption
	Fault in 19 IC 26/3, 19 IC 27/4, 19 IC 26/4, 19 IC 7/2, 19 IC 6/4, 19 IC 6/3

Address flow, front panel

Check signatures	
20 c 8	007U
20 c 9	078C
20 c 10	19A7
20 c 11	2AP8
Signatures OK?	
Yes	No
	Line interruption, defective connecting cable between [955-B] and [955-C]
Check signatures	
20 IC 15 Pin 2	2AP8
20 IC 15 Pin 3	19A7
20 IC 15 Pin 21	078C
20 IC 15 Pin 22	007U
Signatures OK?	
Yes	No
	Line interruption
Check signatures	
20 IC 15 Pin 4	0081
20 IC 15 Pin 5	0102
20 IC 15 Pin 6	0205

20 IC 15 Pin 7	040A
20 IC 15 Pin 8	0814
20 IC 15 Pin 9	2052
20 IC 15 Pin 10	1029
20 IC 15 Pin 11	40A5
20 IC 15 Pin 13	0002
20 IC 15 Pin 14	0004
20 IC 15 Pin 15	0000
20 IC 15 Pin 16	0001
20 IC 15 Pin 17	0020
20 IC 15 Pin 18	0040

Signatures OK?

Yes	No
	20 IC 15 defective

Record signatures

20 IC 50 Pin 1	7439
20 IC 50 Pin 2	2052
20 IC 50 Pin 3	0000
20 IC 50 Pin 4	40A5
20 IC 50 Pin 5	0002
20 IC 50 Pin 6	0001
20 IC 50 Pin 7	0001
20 IC 65 Pin 1	0020
20 IC 65 Pin 2	0040
20 IC 65 Pin 3	0081
20 IC 65 Pin 4	0102
20 IC 65 Pin 5	0205
20 IC 65 Pin 6	040A
20 IC 65 Pin 7	0814
20 IC 66 Pin 1	0002
20 IC 66 Pin 2	0004
20 IC 66 Pin 3	0008
20 IC 66 Pin 4	0010

Check signatures

19 c 1	40A5
19 c 2	0002
19 c 3	0001

19 c 4	0000
19 c 22	2052
19 c 28	1029

Signatures OK?

Yes	No
	Line interruption, cable from [955-B] to [955-C] defective

Data flow, front panel

Check signatures

20 c 12	585F
20 c 13	0072
20 c 14	0020
20 c 15	1009
20 c 16	0028
20 c 17	7U27
20 c 18	7U27
20 c 19	5167

Signatures OK?

Yes	No
	Line interruption, connecting cable between [955-C] and [955-B] defective

Record signatures

20 IC 60 Pin 2	1009
20 IC 60 Pin 3	0020
20 IC 60 Pin 4	0028
20 IC 60 Pin 5	0072
20 IC 62 Pin 5, 6	5167
20 IC 62 Pin 8, 9	585F
20 IC 63 Pin 2	0072
20 IC 63 Pin 4	0020
20 IC 63 Pin 6	1009
20 IC 63 Pin 10	0028
20 IC 63 Pin 12	7U25
20 IC 63 Pin 14	7U27

Signatures OK?	
Yes	No
	Line interruptions

Record signatures

20 IC 60 Pin 9	6U62
20 IC 60 Pin 10	7U19
20 IC 60 Pin 11	7U19
20 IC 60 Pin 12	6U62
20 IC 60 Pin 13	6U62
20 IC 60 Pin 14	1021
20 IC 60 Pin 15	7U4C

Signatures OK?	
Yes	No
	20 IC 60 defective

Record signatures

20 IC 61/63 Pin 3	6U7F
20 IC 61/63 Pin 5	7U07
20 IC 61/63 Pin 7	7U07
20 IC 61/63 Pin 9	6U66
20 IC 61/63 Pin 11	6U6P (6U6F)
20 IC 61/63 Pin 13	7U47
20 IC 61 Pin 1, 15	001P
20 IC 63 Pin 1, 15	001P
20 IC 62 Pin 3	1029
20 IC 62 Pin 4	5167
20 IC 62 Pin 10	585F

Signatures OK?	
Yes	No
	20 IC 20, 20 IC 63, 20 IC 61, 20 IC 52, 20 IC 62

Signatures OK?

Yes	No
	Line interruption, IC 50, 65 or 66 defective

Segment driver

The defective segment or all defective segments can be checked with the aid of the voltage data listed below.
The DAC built up around IC 64 is used to compensate for the current consumption fluctuations of the input circuitry resulting from multiplex operation. This means that the circuitry represents a constant load on the power supply.

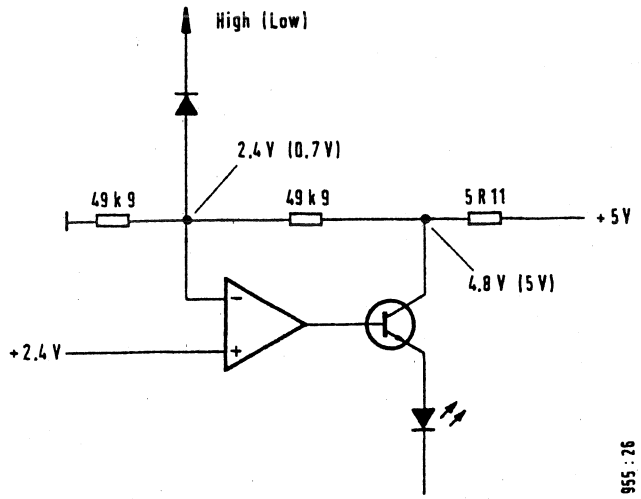

Fig. 7.4-3 Voltages at the segment driver

Current compensation

The defective voltage compensator can be checked with the aid of the voltage data listed below.

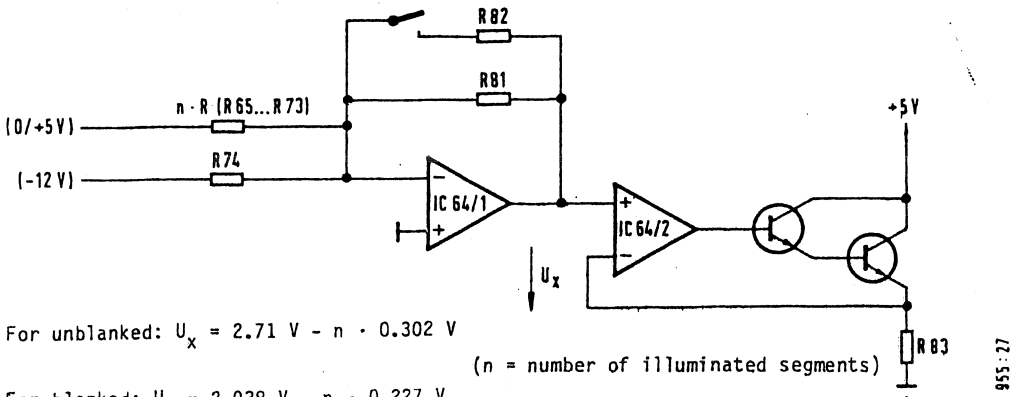

For unblanked: $U_x = 2.71\ V - n \cdot 0.302\ V$

(n = number of illuminated segments)

For blanked: $U_x = 2.038\ V - n \cdot 0.227\ V$

Fig. 7.4-4 Voltages at the current compensator

Writing data into a digit

If the following commands are executed, the 10 dB digit of the level display is no longer displayed correctly. Consequently, it is impossible from this point onwards to state whether the information stored in this segment is correct or not. This is only possible if data are purposely written into address 1H in the RAM on the display logic.

Writing into a digit

1) Output DATA for RAM	Command 0:44.XY	See software description (9.3) for X-Y data
2) Output address for RAM	Command 0:45.ØX	Ø ≤ x ≤ F
3) Reset DAV signal	Command 0:46.1Ø	
4) Set DAV signal	Command 0:46.11	

7.4.3.2 Check interrupt logic

Test all interrupt lines	
Reset frequency interrupt: 0:44.Ø1 -> 20 IC 13 Pin 14 = LOW	
OK?	
Yes	No
	Fault sources: Addressing of Adr. 40H, 19 IC 61, 19 IC 79
Check level interrupt 20 IC 13 Pin 10 = LOW	
OK?	
Yes	No
	Fault sources: 2Ø IC 1Ø2/1, 2Ø IC 1ØØ
Check keyboard interrupt Set keyboard logic to defined status: Reset columns: 0:42.ØØH -> 2Ø IC 23 Pin 1 to LOW and 2Ø IC 13 Pin 12 to LOW	
OK?	
Yes	No
	Fault sources: 2Ø IC 21, 2Ø IC 22, 2Ø IC 23, 2Ø G1 2...2Ø G1 8, 2Ø IC 34, keys, addressing of 42H

Check calibrating clock interrupt	
Reset calibrating clock interrupt 0:47.Ø1 -> 2Ø IC 13 Pin 2 to LOW	
OK?	
Yes	No
	Fault sources: 2Ø IC 1Ø/1, 2Ø IC 5, addressing of Adr. 47H
Check dB/dBm interrupt Reset dB/dBm interrupt: 0:47.Ø1 -> 2Ø IC 13 Pin 4 to LOW	
OK?	
Yes	No
	Fault sources: 2Ø IC 23/2, 2Ø IC 11, 2Ø IC 5, addressing of Adr. 47H
Check level interrupt Check 2Ø IC 13 Pin 6: required state LOW	
OK?	
Yes	No
	Fault sources: 19 IC 76, 19 IC 4/3 19 IC 9, Adr. 46H The required state of the DGTL signal (2Ø IC 9 Pin 5) is LOW
Check common interrupt line 2Ø IC 12 Pin 1: required state LOW Note: If more than 30 seconds have passed since resetting the calibrating clock interrupt, the calibrating clock interrupt is set again.	
OK?	
Yes	No
	Fault sources: 2Ø IC 12

7.4.3.3 Keyboard logic

If it is known which key does not react, only the reaction of the entire circuitry to this one key need be observed during the following procedure.

Reset columns: 0:42.ØØH -> 2ØIC 34 Pin 2, 5, 6, 9, 12, 15, 16, 19 to LOW		
OK?		
Yes	No	
	Fault sources: 2Ø IC 34, addressing of Adr. 42H	
Press all keys in succession Each time a key is pressed, 2Ø IC 23 Pin 1 must change from HIGH to LOW		
OK?		
Yes	No	
	Examine related line (2Ø IC 14 Pin 2, 4, 6, 10) Required value for pressed key from line	
	OK?	
	Yes	No
	Fault source 2Ø IC 23/1	2Ø G1 2 ... 2Ø G1 8, 2Ø IC 23 Pin 1
Check key debouncing		
After pressing each key, 2Ø IC 21 Pin 14 must change to HIGH		
OK?		
Yes	No	
	Fault sources: 2Ø IC 21, 2Ø IC 22	

7.4.3.4 Level switch

Activate level switch: 0:47.08
Emitter T 101, T 102, T 103 to LOW
Note levels of 20 IC 100 Pin 1, 5, 11

Turn level switch to right. The following combinations result:
The reference is always the starting configuration noted above.

IC 100	nth stop	n+1th stop	n+2th stop	n+3th stop	n+4th stop
Pin 1	L	H	H	L	H
Pin 5	H	H	L	H	H
Pin 11	H	L	H	H	L

OK?

Yes

No

Fault sources: 20 G1 100 ... G1 102, 20 T 100 ... 20 T 102, level switch
voltage supply, mechanical equipment

Read in level switch direction: I:46

Note value and turn level switch to right again,
read in again and compare with Table below. Reference: first value

nth stop	n+1th stop	n+2th stop	n+3th stop	n+4th stop
4	1	2	4	1

OK?

Yes

No

Fault sources: 20 IC 100, 20 IC 101, addressing of Adr. 46H

Turn level switch to left. The following combinations result:
The reference is always the starting configuration noted above.

20 IC 100	nth stop	n+1th stop	n+2th stop	n+3th stop	n+4th stop
Pin 1	L	H	H	L	H
Pin 5	H	L	H	H	L
Pin 11	H	H	L	H	H

OK?

Yes

No

Fault sources: 20 G1 100 ... G1 102, 20 T 100 ... 20 T 102, level switch
voltage supply, mechanical equipment

Read in level switch direction: I:46	
Note values and turn level switch to left again, read in again and compare with Table below. Reference: first value nth stop 6 / n+1th stop 3 / n+2th stop 5 / n+3th stop 6 / n+4th stop 3	
OK?	
Yes	No
	Fault sources: 20 IC 100, 20 IC 101, addressing of Adr. 46H

7.4.3.5 Frequency adjustment

Check basic clock at 10 IC 60 Pin 10: required value 9 kHz ± 10%	
OK?	
Yes	No
	Fault source: astable multivibrator 19 IC 60
Turn frequency switch rapidly to right -> Observe pulses at 19 IC 92 Pin 1 Required value 5 V ≤ x ≤ 9.5 V	
Turn frequency switch rapidly to right -> Observe pulses at 19 IC 92 Pin 7 Required value 5 V ≤ x ≤ 9.5 V	
OK?	
Yes	No
	Fault sources: Comparators 19 IC 92/1 and 19 IC 92/2
Check direction detection Turn switch rapidly to right Observe 19 IC 80 Pin 1 Required: Pulses 5 V ≤ x ≤ 9.5 V	
Turn switch rapidly to left Observe 19 IC 80 Pin 1 Required: LOW	
Can pulses be measured at 19 IC 56 Pin 10 in both directions?	
Yes	No
	Fault sources: 19 IC 80, 19 IC 56/4

Check "zero setting", corresponding to a counter reading of 5000 Set counter: 0:40.11 Read out counter reading: I:42 required value 00 I:43 required value 50	
OK?	
Yes	No
	Fault sources: Addressing of Adr. 40H, 42H, 43H 19 IC 61 ... 19 IC 68/1
Enable counter: 0:40.10 Turn switch to right -> Frequency changes to higher values	
Turn switch to left -> Frequency changes to lower values	
OK?	
Yes	No
	Check frequency interrupt; refer to Section 7.4.3.3

7.4.3.6 Input section controller

Check operation of data lines of Adr. 41H	
Load and start program as per Section 9.5.6	
Observe data lines of 19 IC 53	
Do all data lines change from HIGH to LOW and vice versa?	
Yes	No
	Fault sources: Addressing of Adr. 41H, 19 IC 53
Check power driver Write bit to be changed into Adr. 41H Trigger driver with output 0:40.00 -> 19 IC 61 Pin 1 LOW Outputs of 19 IC 51, 19 IC 52 must change in accordance with data entered Switch driver back to high impedance: 0:40.10 -> 19 IC 61 Pin 1 HIGH	
OK?	
Yes	No
	Driver 129 IC 51, 52 defective - Addressing of Adr. 40H, 19 IC 61

7.4.3.7 ADC

Conditions of basic setting (can be achieved by pressing the RESET key on the CPU). No level at the input jack.

Check input voltages 19 IC 10 Pin 1 Required value Chassis 19 IC 10 Pin 2 Required value +2 V ± 1 mV 19 IC 10 Pin 3 Required value ≤ 2.5 V	
OK?	
Yes	No
	Check DC amplifier
Enable ADC: 0:46.10	
Read in ADC data I:40 Required value X9 I:41 Required value 39	
OK?	
Yes	No
	Check data flow on the basis of the following timing diagram

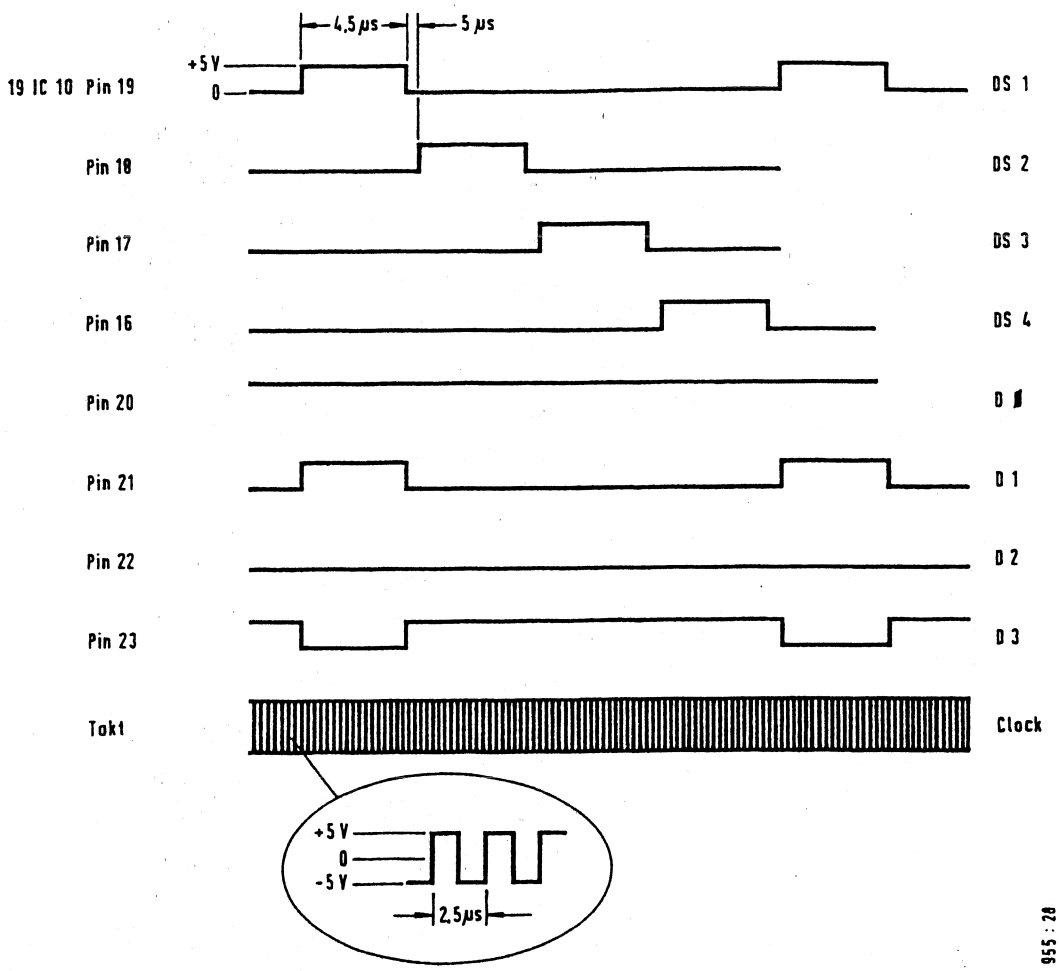

Fig. 7.4-5 Timing diagram: ADC data flow

7.5 TROUBLESHOOTING IN THE MEASURING SECTION

7.5.1 GENERAL INFORMATION

For a wideband measurement, the signal applied is amplified in the pre-amplifier and in the IF wideband amplifier and then passed to the rectifier and jack [35]. The rectified signal is conditioned for the analog/digital converter (digital measurement) and for the display instrument (analog measurement) in the DC evaluation circuit. Fig. 7.5-1 (level diagram for coaxial wideband measurement) shows the assemblies involved in the form of function blocks. In addition, V_{RF}, V_{dBm} und V_{DC} are listed as a function of the measuring range set (dB/dBm).

The signal passes through the following assemblies for a selective measurement:
(Also refer to Fig. 7.5-2, Level plan of the selective measurement path up to the IF output, at the end of the Service Instructions of the SPM-15).

Input section (2)
Pre-amplifier (3)
10 MHz low-pass filter (4)
Mixer 1 (5)
40 MHz crystal band-pass filter (7)
Mixer 2 (8)
10 kHz band-pass filters (9)
10 kHz band-pass filter/25 Hz mech. (22)
IF selective amplifier (15)
IF wideband amplifier (15)
Rectifier (15)
DC evaluation circuit (15)
} IF evaluation circuit (15)

The signal path of an applied level of 0 dB/dBm can be tracked with the aid of the level diagram. Measurements must be made at high impedance at the test points.
In addition, the level diagram also shows the gains and/or attenuations of the individual assemblies. The adjustable gains V_{RF}, V_{dBm} and V_{IF} are listed in their setting range with the START commands (refer to Section 9.5.5), which force a defined setting. This allows checking of all the possible settings of the selective measuring path.

All circuits on the RF chassis operate with a single supply voltage of +12 V. The wiring of this supply voltage, as well as the affected resistors, inductors and feed-through capacitors, is shown in Fig. 7.5-3 (+12 V supply voltage on the RF chassis, at the end of the Service Instructions of the SPM-15).

Monitor (MONEX) functions

An explanation of the monitor (MONEX) mode can be found in Section 9.5.

A list of the most important test programs which also allow through-connection of the calibrating level and manipulation of the calibration controller can be found in Section 9.5.5 (Monitor test programs).

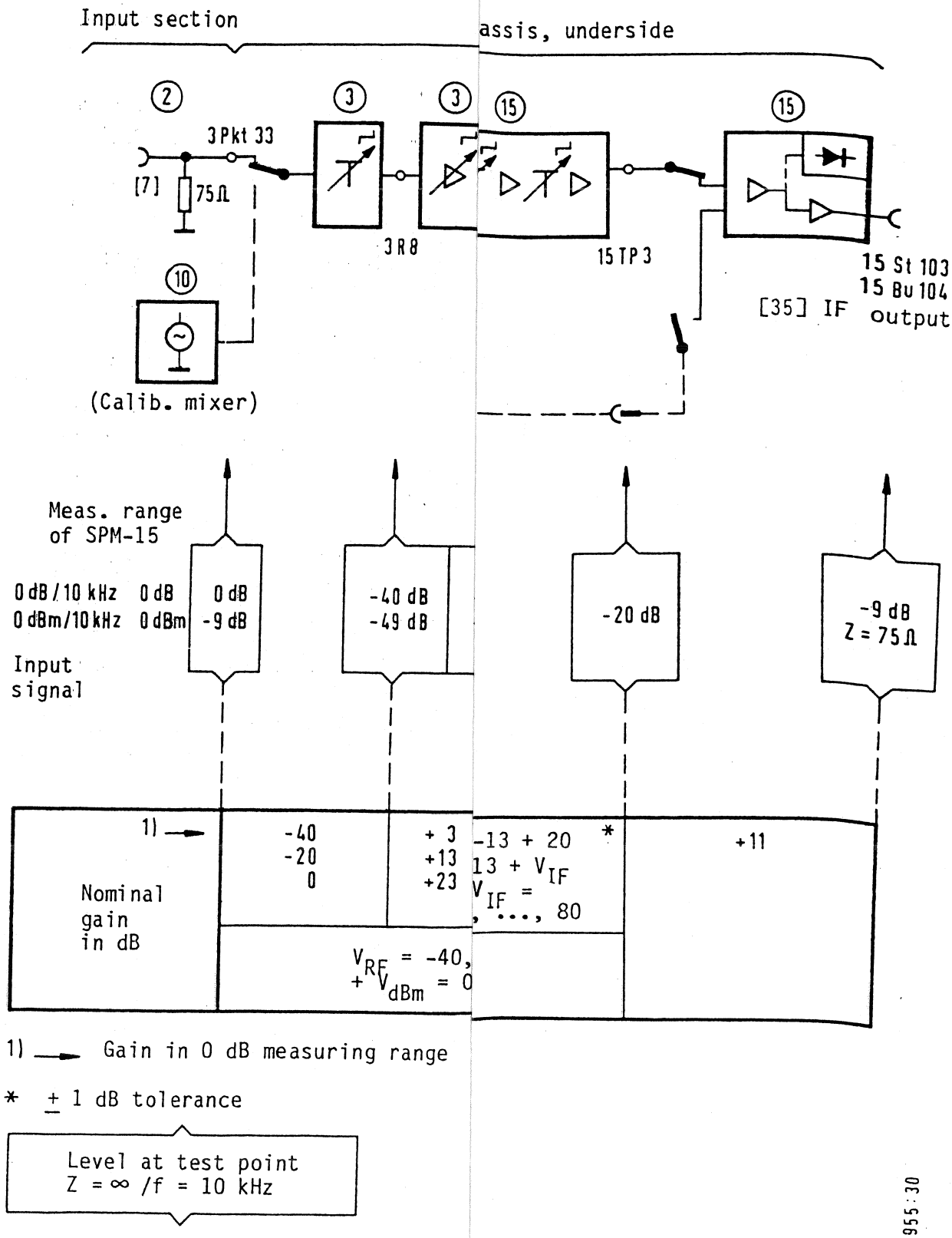

Fig. 7.5-2 Level diagram of the sel

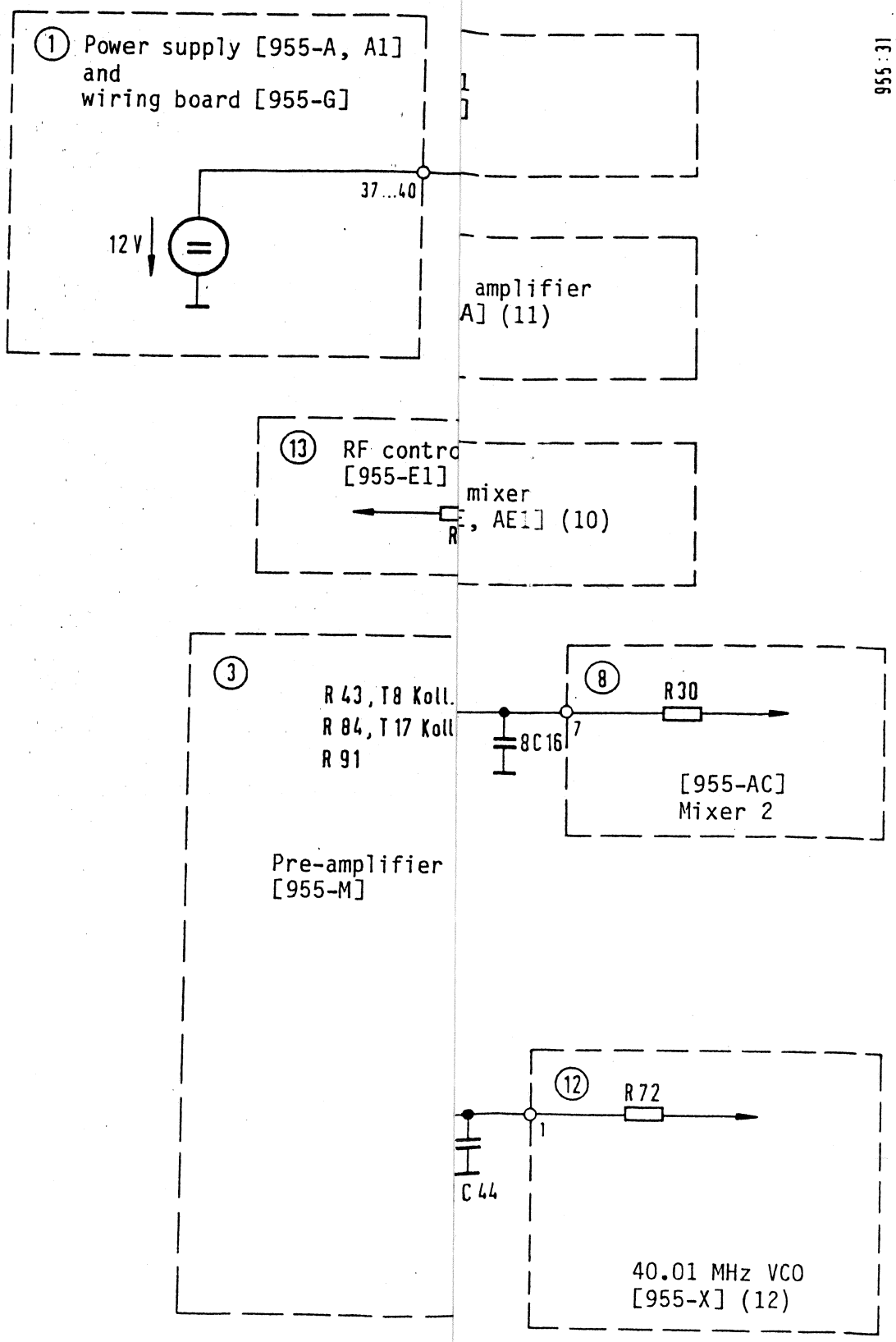

Fig. 7.5-3 +12 V supply voltage o

Coaxial wideband measurement level diagram

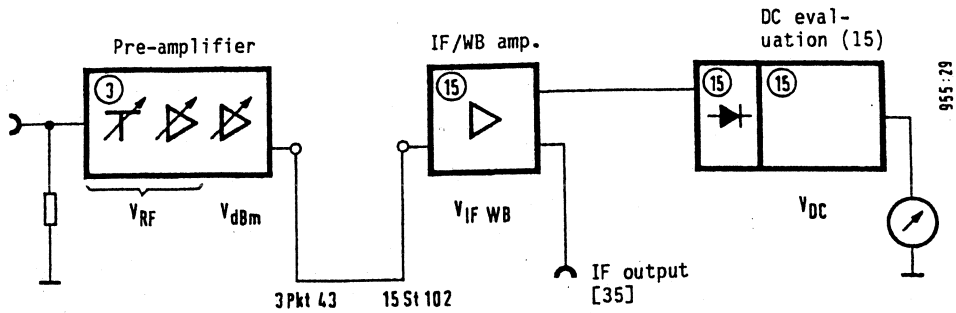

Input level and measuring range	V_{RF}	V_{dBm} in dB	Level at 15 St 102	V_{IF} WB	Level at IF outp. [35]	V_{DC}
+20 dB/dBm	-40 dB	0/9.03	-20 dB	+11 dB	0 dBm/75 Ω	0 dB/0 dB
+10 dB/dBm	-30 dB	0/9.03	-20 dB	+11 dB	0 dBm/75 Ω	0 dB/0 dB
0 dB/dBm	-20 dB	0/9.03	-20 dB	+11 dB	0 dBm/75 Ω	0 dB/0 dB
-10 dB/dBm	-10 dB	0/9.03	-20 dB	+11 dB	0 dBm/75 Ω	0 dB/0 dB
-20 dB/dBm	0 dB	0/9.03	-20 dB	+11 dB	0 dBm/75 Ω	0 dB/0 dB
-30 dB/dBm	+10 dB	0/9.03	-20 dB	+11 dB	0 dBm/75 Ω	0 dB/0 dB
-40 dB/dBm	+10 dB	9.03/9.03	-20.97 dB	+11 dB	-0.97 dBm/75 Ω	+1 dB/+10 dB
-50 dB/-	+10 dB	9.03/-	-20.97 dB	+11 dB	-0.97 dBm/75 Ω	+11 dB/-

Fig. 7.5-1 Level diagram for coaxial wideband measurement

Selective signal path level diagram

see figure 7.5-2 at end of SPM-15 service manual.

HF chassis +12 V power supply

see figure 7.5-3 at end of SPM-15 service manual.

7.5.2 INPUT SECTION AND PRE-AMPLIFIER

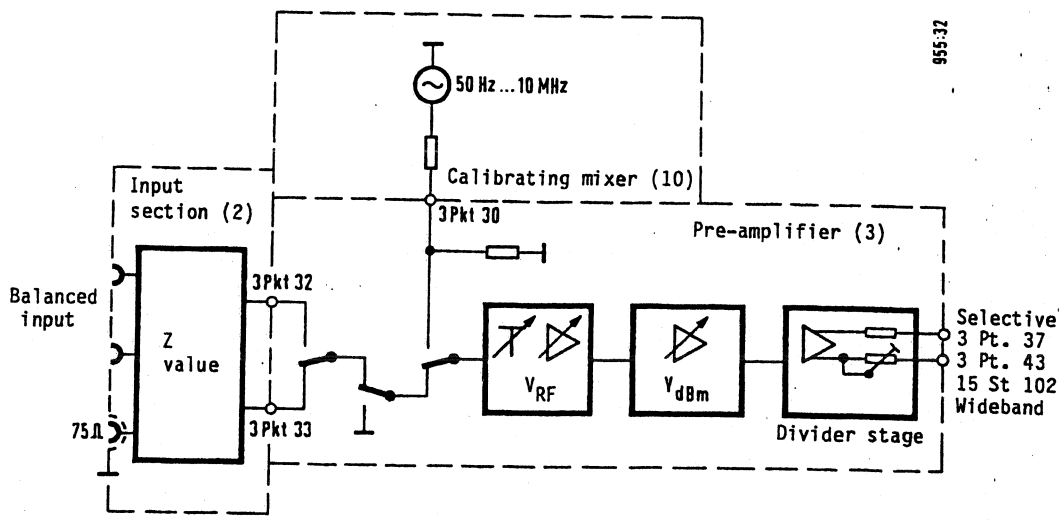

Fig. 7.5-4 Block circuit diagram, input section and pre-amplifier

Troubleshooting in the input section:

Select the Z_0 value for the input jacks via the front panel keys and check the signal paths.

Troubleshooting in the pre-amplifier:

The signal inputs of the pre-amplifier are 3 Pt. 30, 32, 33. The MONEX input S:9108 switches through the calibrating level (V_{RF} = 0 dB, V_{dBm} unchanged). The TK-11 and SPM-19 can be used to track the signal path as far as the signal outputs of the pre-amplifier, 3 Pt. 37, 43. Fig. 7.5-2 (Level diagram of the selective measuring path up to the IF output, at the end of the Service Instructions for the SPM-15) lists the start commands for all settings of V_{RF} and V_{dBm}.

A complete check of the pre-amplifier can be made in accordance with Section 7.8.4.

7.5.3 10 MHZ LOW-PASS FILTER, MIXER 1, 40 MHZ CRYSTAL BAND-PASS FILTER, MIXER 2

These input section assemblies are used for selective measurement only.

With an input signal of 0 dB/0 dBm at the 75 Ω input of the SPM-15, the signal path can be tracked with the SPM-16 and a TK-11. Fig. 7.5-2 (Level diagram of the selective measurement path up to the IF output, at the end of the Service Instructions for the SPM-15) states the test points and the level values to be measured.

Fig. 7.5-3 (12 V supply voltage on the RF chassis, at the end of the Service Instructions for the SPM-15) can be used for tracking the supply voltage on the RF chassis.

The carrier signal (40 ... 50 MHz) of the OD-15 must be available in mixer 1. It is supplied via the buffer stage (11) and the carrier limiter 1 (6).

The 40.01 MHz carrier must be available in mixer 2. The carrier is supplied from the 40.01 MHz generator (12) via carrier limiter 2 (8). Troubleshooting in the 40.01 MHz generator can be performed in accordance with Section 7.8.14.

Section 7.8.5 describes how to check and, if necessary, re-align the 10 MHz input low-pass filter (4).

The pass band of the 40 MHz crystal band-pass filter influences the selectivity curve of the band-pass filter b = 3.1 kHz in the overall instrument. The range 40 MHz ± 1.5 kHz must be symmetrical about 40 MHz, and the attenuation at the limits must not exceed 0.4 dB. The selectivity curve of the 3.1 kHz filter can be checked with little effort in accordance with 7.5.4. If the tolerances stated there are maintained, the pass band of the crystal band-pass filter and the 10 kHz band-pass filter are correct. Re-alignment of the pass band necessitates a balanced measurement at the input of the 10 kHz band-pass filter. Board [955-7026] is then modified and alignment carried out in accordance with 7.8.7.

The attenuation peaks of the 40 MHz crystal band-pass filter are correctly aligned if the instrument displays intrinsic noise levels of less than -135 dB with open measuring input and b = 25 Hz for the frequencies 18.5 kHz, 20 kHz and 21.5 kHz.

7.5.4 10 kHz BAND-PASS FILTERS, IF SELECTIVE AMPLIFIER

These receive section assemblies are used for selective measurement only.

The 10 kHz band-pass filters with bandwidths of b = 3.1 kHz and b = 1.74 kHz (with option /00,23: 1.95 kHz) are located on board [955-AA]. The 10 kHz band-pass filter/b = 25 Hz is on [955-K] or -K1].

Checking the pass-band attenuation compensation:

For b = 1.74 kHz (1.95 kHz), see description in 7.8.9

For b = 25 Hz, see description in 7.8.10

Checking the selectivity curves:

Instruments required:

Level generator	PS-19	W&G
Level meter	SPM-19	W&G
Display unit	SG-3 or SG-4	W&G

Test set-up:

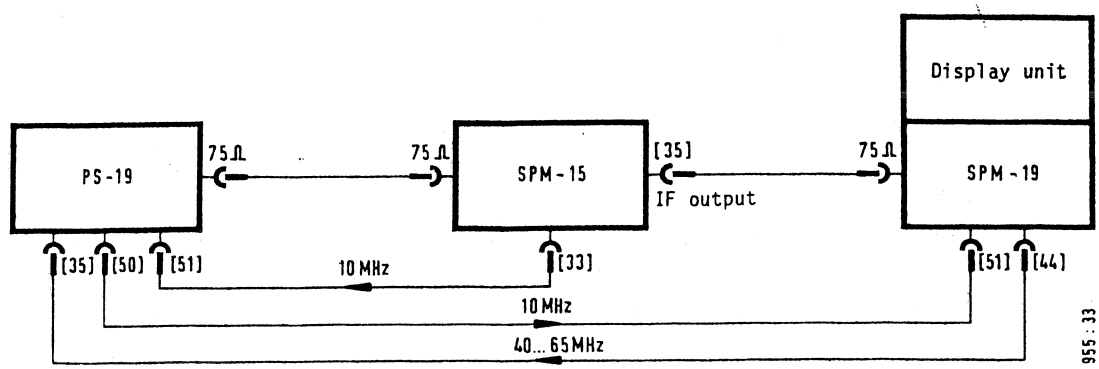

Settings:

PS-19: 0 dB/75 Ω, external frequency control

SPM-19; f_{cent} = 10 kHz

Δf = 10 kHz and 1 kHz

b = 400 Hz and 25 Hz/"Abs-Ref" measurement with 10 kHz/80 dB scale

CAL OFF

SPM-15: f = 10 kHz
Measuring range 0 dB/20 dB scale
CAL OFF

Examine the attenuation profile of the band-pass filters activated on the SPM-15 and check for compliance with the tolerances:

b = 3.1 kHz: 10 kHz $\pm$ 1.5 kHz $\geq$ -3 dB, $\pm$ 2 kHz $\leq$ -60 dB
b = 1.74 kHz: 10 kHz $\pm$ 650 Hz $\geq$ -3 dB, $\pm$ 2 kHz $\leq$ -60 dB
b = 25 Hz: 10 kHz $\pm$ 7 Hz $\geq$ -3 dB, $\pm$ 80 Hz $\leq$ -50 dB

For b = 3.1 kHz and b = 1.74 kHz, the 10 kHz band-pass filter [955-AA] must be repaired and/or aligned by the manufacturer if the tolerances are exceeded.

If the 3.1 kHz filter has a "slanting" pass band, the 40 MHz crystal band-pass filter must also be considered during troubleshooting.

A signal can be fed directly into 22 St 1 to check the IF selective amplifier ((15) Page 1). All gain settings V_{IF} = 0, ..., 80 dB can be checked with the MONEX. The procedure is described in 7.8.11.2. This presupposes correct functioning of the downstream IF wideband amplifier, which couples out the IF signal at jack [35] ((15) Page 2).

7.5.5 IF WIDEBAND AMPLIFIER, RECTIFIER

The IF wideband amplifier ((15) Page 2) has a fixed gain of 11 dB.
In selective measurements, the 10 kHz IF signal is amplified and fed to the rectifier and jack [35], the 50 Hz ... 10 MHz signal supplied by the pre-amplifier being used for wideband measurements.

The 10 kHz IF signal is passed to the amplifier input by 15 T 101, the wideband signal by rel 102.

The DC operating point of 15 IC 105 is set to approx. 5.5 V by the voltage divider R 115, R 116. This voltage must also be measured at IC 105 Pins 1, 8 and 14.
The reference potential of the operational amplifier (centre voltage) is determined by Gl 101, Gl 102 and sets IC 105 Pin 8 to approx. 5.4 V.

The frequency response of the IF amplifier is best checked and/or aligned in the manner described in 7.8.11.3. This ensures that the instrument is correctly aligned for wideband measurements.

The rectifier ((15) Page 2) operates at 10 kHz for selective measurement, the applied signal frequency being rectified for wideband measurement.

A functional description can be found in Section 9.2.15.
The linearity of the rectifier can easily be checked by a 20 dB level jump at the instrument input. To do so, set the 0 dB display in ANALOG mode to wideband and measure the voltage at 15 TP 12. If the input level is reduced by 20 dB, the voltage at 15 TP 12 must drop to 1/10 of the value previously displayed.

Checking the frequency response:
Using the PS-19/Z = 75 Ω, externally controlled by the SPM-19, feed Z = 75 Ω into the test input. Set the UUT to wideband, analog. Measure at jack [35] with SPM-19. The frequency response of the rectifier is OK if the frequency response measured at [35] corresponds to the display on the instrument of the UUT (1 dB scale). (This presupposes correct functioning of the DC evaluation circuit).

7.5.6 DC EVALUATION CIRCUIT [955-J]

Circuit diagram 15, Page 3

7.5.6.1 Tools required - General information

Tools required:
Generator with 0 dB output level and possibility for varying the output level in both mB and 1 dB increments (the PS-15 is highly suitable for this purpose).

MONEX with adapter board for SPM-15

If the instrument is working properly, a level of 0 dB/75 Ω is applied to the UUT and the UUT then set to a defined state with the aid of the standard set-up. Section 7.5.6.2 must then always be worked through next.
If the fault is known and included in the list below, the search can be continued at the Section stated; otherwise, work through all Sections, starting with Section 7.5.6.2.
The DC amplifier must be re-aligned after completing the repair.
If the digital section is not working properly, start with Section 7.4 Control section.

Fault:	Continue with:
Level present at 15 TP 10, but not displayed	7.5.6.2 - 7.5.6.10
1 dB scale cannot be switched on	7.5.6.9
1 dB increments displayed incorrectly in scale range	7.5.6.7
20 dB scale cannot be switched on	7.5.6.8
Analog displays functioning correctly, but DGTL not working properly	7.5.6.6, 7.5.6.7, 7.5.6.10
Instrument does not switch off for DGTL	7.5.6.11
Noise is displayed correctly in analog mode, but cannot be measured in DGTL mode	7.5.6.5 - 7.5.6.7, 7.5.6.10

7.5.6.2 First step on DC evaluation circuit

Measure -12 V at Pt. R298/C210. Required value -12 V ± 100 mV	
Measure +12 V at Pt. R287/C206. Required value +12 V ± 100 mV	
Measure +5 V at Pt. R296/C208. Required value +5 V ± 50 mV	
Measure -0,6 V at Pt. R293/cathode G1208. Required value -0.6 V ± 100 mV	
Voltages OK?	
Yes	No
	Check power supply
Change input levels at TP 12 until 5.7 V ± 2 mV at TP 12	

Setting possible?		
Yes	No	
	Measure voltages from bridge a-b. Required value 4.5 V - 5.5 V	
	Voltage OK?	
	Yes	No
	Check amplifier IC 201	Recommence troubleshooting in pre-amplifier

7.5.6.3 Check calibration controller

Check calibration controller Voltage at TP 12 5.7 V ± 2 mV	
Use command S:9394 to set calibration controller (IC 207) to centre setting	
Measure voltage at TP 13. Required value -3.97 V ± 5 mV	
Use command S:9395 to set calibration controller to minimum setting	
Measure voltage at TP 13. Required value -3.395 V ± 10 mV	
Use command 0:25.FF to set calibration controller to maximum setting	
Measure voltage at TP 13. Required value -4.537 V ± 10 mV	
Voltages OK?	
Yes	No
	Check addressing of Adr. 25H (IC 9, IC 204/2) Check calibration controller (IC 210, IC 207)

7.5.6.4 Check 0/16 dB amplifier

Check 0/16 dB amplifier Voltage at TP 12 5.7 V ± 2 mV -> P_{in} = 0 dB	
Voltages OK?	
Yes	No
	Check addressing of Adr. 27H (IC 9, IC 204/4) Check intermediate latch (IC 227) Check amplifier (IC 202, T 201, T 202)

Reduce input level by 14 dB	
Output command 0:27.08 - Measure voltage at TP 14. Required value 4.99 V ± 30 mV	
Voltages OK?	
Yes	No
	Check addressing of Adr. 27H (IC 9, IC 204/4) Check intermediate latch (IC 227) Check amplifier (IC 202, T 201, T 202)

7.5.6.5 Check 0.1/1 dB amplifier

Check 0.1 dB controller — Voltage at TP 12 = 5.7 V ± 2 mV -> P_{in} = 0 dB	
Reduce input level by 11 dB	
Commands 0:23.0F 0:24.FF 0:25.80 0:27.00 -> Calibration controller at centre, 0/16 dB amplifier at 0 dB, controller at 11 dB	
Voltages at TP 15 OK? (Required value 3.97 V ± 30 mV)	
Yes	No
	Check addressing of Adr. 23H, 24H (IC 9, IC 10/4, IC 204/1) Check amplifier (IC 213, IC 212, IC 211)
Increase input level by 11 dB -> Input level = 0 dB -> Voltage at TP 12 = 5.7 V ± 2 mV	
Commands 0:23.03 0:24.95 0:25.80 0:27.00 -> Calibration controller at centre, 0/16 dB amplifier at 0 dB, controller at -2 dB	
Voltages at TP 15 OK? (Required value 3.15 V ± 7 mV)	
Yes	No
	Check amplifier (IC 213, IC 212, IC 211)

Commands 0:23.05 0:24.AC 0:25.80 0:27.00 -> Calibration controller at centre, 0/16 dB amplifier at 0 dB, controller at +2 dB
Voltages at TP 15 OK? (Required value 5.00 V ± 10 mV)

Yes	No
	Check amplifier (IC 213, IC 212, IC 211)

7.5.6.6 Check reference voltages

Check reference voltages	
Measure 2 V reference voltage at TP 18. Required value +2.000 V ± 1 mV	
Voltage OK?	
Yes	No
	Check reference voltage at G1 202. Required value 6.4 V ± 320 mV
	Check reference amplifier (IC 232)
Measure -2.5 V reference voltage at Pin 6/IC 231. Required value -2.5 V ± 3 mV	
Voltage OK?	
Yes	No
	Check reference voltage amplifier (IC 231)

7.5.6.7 Check logarithmizer and shift amplifier

Check logarithmizer and shift amplifier Voltage at TP 12 = 5.7 V ± 2 mV
Output commands 0:23.03 0:24.95 0:25.80 0:27.00 -> 0.1 dB controller at -2 dB
Note U_x at TP 16

Output commands 0:23.05
0:24.AC
-> 0.1 dB controller at + 2 dB

Voltages at TP 16 OK? Required value U_x = -2 V ± 5 mV

Yes	No

Re-align voltage with the aid of P 206

Is this possible?

Yes	No
	Check reference generator IC 229, IC 226/2
	Check logarithmizing amplifier IC 225, IC 226/1

Output commands 0:23.04
0:24.82

Voltages at TP 17 OK? (Required value 0 V ± 10 mV)

Yes	No

Re-align voltage with the aid of P 205

Is this possible?

Yes	No
	Check shift and reference voltage amplifier (IC 230, IC 231)

7.5.6.8 Check 20 dB scale

Check 20 dB scale	
Apply 0 dB input level (5.7 V)	
Output commands 0:23.04 0:24.82 0:25.80 0:27.04 -> Calibration controller at centre, 0.1 dB controller at 0 dB, unexpanded scale on	
Voltage at Pin 2 IC 233 = 3.97 V ± 7 mV?	
Yes	No
	Check switch IC 233/2 Check addressing of Adr. 27H (IC 9, IC 204/4) Check intermediate latch IC 227
Voltage at Pin 10 IC 233 = 3.97 V ± 10 mV?	
Yes	No
	Switch IC 233/3 - Required state ON Switch IC 233/4 - Required state OFF Check addressing of Adr. 27H (IC 9, IC 204/4) Check intermediate latch IC 227

7.5.6.9 1 dB scale

Check 1 dB scale
Input level 0.00 dB (5.7 V)
Output commands 0:23.04 0:24.82 0:25.80
Output command 0:27.00 -> 1 dB scale on, 10 dB scale off
Measure voltage at Pin 4/IC 233 - Required value 2.5 V ± 20 mV

Voltage OK?	
Yes	No
	Check switch IC 233/1 - Required status ON Check switch IC 233/3 - Required status ON Check switch IC 233/4 - Required status OFF
	Check addressing and intermediate latch (IC 9, IC 204/4, IC 227) Check logarithmizer and shift amplifier

7.5.6.10 Check 4-bit ADC

Check 4-bit ADC		
Perform a RESET to force the system to assume the basic settings The following levels must be applied consecutively: -20.1, -10.1, -1.05, 0.00, +1.05 dB. The following bit configurations must appear when reading address 26H: Level ADR 26H -20.1 00H -10.1 01H -1.1 03H +0.0 07H +1.1 0FH		
Bit configurations OK?		
Yes	No	
	Measure reference voltage at Pin 4 IC 208 - Required value 2 V ± 1 mV	
	Voltage OK?	
	Yes	No
		Cf. above, Check reference voltage
	Apply level of +1 dB - Measure voltage at Pin 5 IC 208 Required value 2 V ± 5 mV	
	Voltage OK?	
	Yes	No
		Check complete DC amplifier
	Check comparator IC 208	

7.5.6.11 Check instrument shut-off

Check instrument shut-off	
Input level 0 dB -> Voltage at TP 12 = 5.7 V ± 2 mV	
Output commands 0:23.04 0:24.82 0:25.80 0:27.07 -> Calibration controller at centre, 0/16 dB amplifier at 0 dB, instrument off	
Instrument pointer at left-hand stop?	
Yes	No
	Check switches IC 233/3 - Required status OFF IC 233/4 - Required status ON Check addressing of ADR 27H (IC 9, IC 204/4) Check intermediate latch (IC 227)

7.5.7 DEMODULATOR

The demodulator is shown in (15) Page 4.

The detailed functional description in Section 9.2.15 and the alignment instructions in Section 7.8.11.6 can be used for troubleshooting.

7.5.8 CALIBRATING MIXER

In instruments of Series A ... D: [955-AE]
In instruments of Series E ...: [955-AE1]
This distinction between Series is unnecessary for instruments without tracking generator.

The calibrating mixer has two calibration sources:
The wideband calibration source supplies a 10 kHz square-wave signal with a fixed level of -40 dB. The selective calibration source supplies a signal in the frequency range from 50 Hz to 10 MHz. This signal is additionally made available for the tracking generator at 10 St 1 via a decoupling stage. The calibrating level can be attenuated very accurately by up to 6.9 dB in instruments of Series A ... D and by up to 10.5 dB in instruments of Series E .... The MONEX input S:9500 sets A_{dB} = 0 (-> -40 dB calibrating level).

Refer to Section 9.2.10 for a more detailed circuitry description.

When troubleshooting, it should first be ensured that the carrier (40 ... 50 MHz) is present at 10 Pt. 1 with approx. -21 dB and the signal (40 MHz) at 10 Pt. 5 with approx.. -5 dB (measured at high impedance).

The MONEX inputs S:9108 (selective calibrating level) and S:9109 (wideband calibrating level) can be used to switch both calibration sources into the measuring path of the receiver. If the instrument is in "dBm" mode, V_{dBm} must additionally be set to 0 - S:9390. If operating correctly, both calibration sources produce a 0 dB display on the 1 dB scale. Any re-alignment of the absolute level of the selective calibration source (after finding an unacceptable high measuring error at f = 10 kHz and deviation from the 0 dB/1 dB scale with calibrating level switched through) must be carried out in accordance with 7.8.15.2.

Unacceptable high selective measuring errors which are frequency-dependent necessitate realignment of the calibrating level frequency response in accordance with 7.8.15.1

7.6 TROUBLESHOOTING IN THE TRACKING GENERATOR (PSE)

7.6.1 GENERAL INFORMATION

Fig. 7.6-1 shows a highly simplified block circuit diagram of the assemblies making up the tracking generator.
It can be seen that, for test purposes (particularly for frequency response measurements), the internal synthesizer OD-15 can be disconnected and the carrier fed in at 6 Bu 1 using a sweepable OD-19 (synthesizer of the SPM/PS-19).
Fine level adjustment (0.1 dB increments) takes place in the calibrating mixer and is controlled by a digital/analog converter on the amplifier board of the tracking generator. Coarse level adjustment (5 dB increments on instruments of Series A ... D and 10 dB increments on instruments of Series E ...) is performed by resistance dividers in the PSE amplifier.
The attenuation in the calibrating mixer for fine adjustment is stated as A_{dB}.
Refer to Section 9 for a more detailed circuitry description.

All settings can be established in a defined form and then checked using the MONEX. The function of the start programs can be found in Section 9.5.5 (Monitor test programs).

Before going into detail on possible causes of faults in the subsequent Sections, there follows a list of the most important fault sources of a general nature:

- The two switches 10 S 1 and 10 S 2 in the calibrating mixer must be open for operating the tracking generator.
- Check the voltages +12 V and -12 V at plug "b" for the digital section of the PSE amplifier.
- Check the +15 V supply voltage of the analog section (can be de-energized with 23 T 15 or 23 T 6).
- Check the connections between the calibrating mixer and the PSE amplifier and between the output field and output jacks.
- The dividers are only controlled correctly if the PSE is switched on.

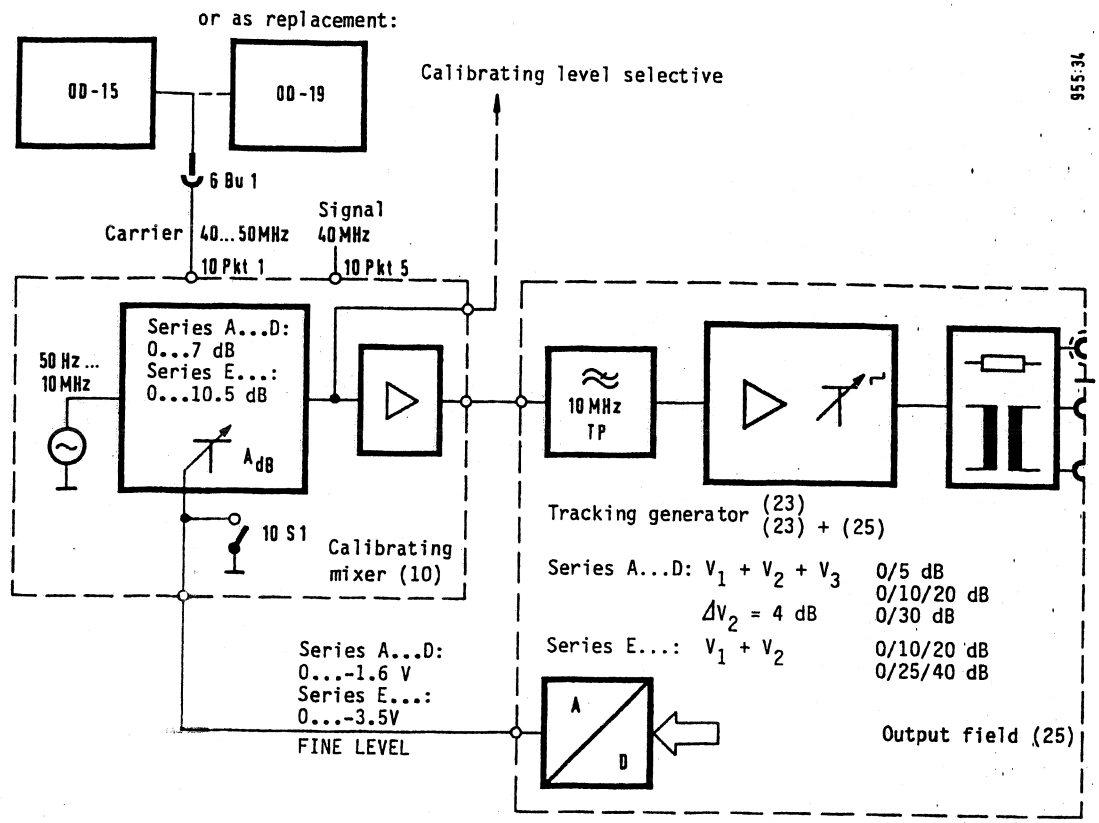

Fig. 7.6-1 Block circuit diagram of the PSE

7.6.2 FINE LEVEL ADJUSTMENT

Instruments of Series A...D:

To check the fine level adjustment, set the tracking generator to Z = 75 Ω and check the send level setting between +10 dB and -4.0 dB.
(On instruments with the "dBrnC" option, the send level can be set in "dB" by means of the MONEX input S:9902).

Send level	Equivalent setting with MONEX	Attenuation of calib. mixer level A_{dB}	23 IC 5 Pin 6 = U_{DAC}
+1.0 dB	S:9505	0.5 dB	-0.16 V
	↓	↓	↓
0 dB	S:9515	1.5 dB	-0.46 V
	↓	↓	↓
-4.0 dB	S:9555	5.5 dB	-1.36 V
	↓	↓	↓
	S:9556	5.6 dB	
	S:9557	5.7 dB	
	↓	↓	
	S:9569	6.9 dB	-1.60 V

Possible fault sources are the digital/analog converter (23 IC 4, 5, 6 and 9) and the attenuation of the 40 MHz signal in the calibrating mixer (10 IC 7).
The reference voltage (23 P 8) must be re-aligned in accordance with 7.8.16.2.

Instruments of Series E...:

To check the fine level adjustment, set the tracking generator to Z = 75 Ω and check the send level setting between -5.0 dB and -14.9 dB.
(On instruments with the "dBrnC" option, the send level can be set in "dB" by means of the MONEX input S;9902).

Send level	Equivalent setting with MONEX	Attenuation of the calib. mixer level A_{dB}	23 IC 15 Pin 6 = U_{DAC}
	S:9600	0 dB	0 V
	S:9601	0.1 dB	-60 mV
-5.0 dB	S:9605	0.5 dB	-0.28 V
-5.1 dB	S:9606	0.6 dB	-0.33 V
	↓	↓	↓
-10.0 dB	S:9655	5.5 dB	-2.31 V
-10.1 dB	S:9656	5.6 dB	-2.34 V
	↓	↓	↓
-14.5 dB	S:96A0	10.0 dB	-3.37 V
-14.6 dB	S:96A1	10.1 dB	-3.38 V
	↓	↓	↓
-14.9 dB	S:96A4	10.4 dB	-3.44 V

Possible faults sources are the digital/analog converter (23 IC 14, 15, 16 and 19) and the attenuation of the 40 MHz signal in the calibrating mixer (10 IC 7).
Re-alignment of the reference voltage (23 P 3) must be carried out in accordance with 7.8.16.2.

7.6.3 DIVIDER CONTROLLER

Instruments of Series A ... D:

To check the dividers, start with a send level of 0 dB and then set level values of -5 dB, -10 dB, -20 dB, -30 dB. This successively switches on the 5 dB, 10 dB, 20 dB, 30 dB dividers.

The amplifier ΔV_2 = 4 dB, which can be switched on additionally, is only required for $R_i \approx 0$ and level values > 7,0 dB. The alignment of 23 P 2 is OK if the level jump from 7.0 dB to 7.1 dB at $R_i \approx 0$ to R_a = 600 Ω is 10 mB ± 1 mB.

Accurate divider measurement and alignment of 23 P 1 and 23 P 2 are described in 7.8.16.2.

7.8 ALIGNMENT OPERATIONS AND TEST MEASUREMENTS

7.8.1 SUMMARY: LIST OF ALL ALIGNMENT ELEMENTS, ALIGNMENT OPERATIONS AND TEST MEASUREMENTS AFTER REPLACING ASSEMBLIES

A list of the measuring equipment required can be found in Section 6.2.

List of all alignment elements

Alignment element	Alignment	Section
1 P 1	Tripping threshold, line undervoltage	7.8.2
1 P 2	Tripping threshold, battery undervoltage	7.8.2
2 C 2	Return loss 75 Ω input (WECO: 2 C 14)	7.8.3.1
2 C 3	Balance 600 Ω input (WECO: 2 C 1)	7.8.3.2
2 C 5	Balance 124 Ω, 150 Ω input (WECO: 2 C 3)	7.8.3.2
2 C 11	Frequency response 124 Ω, 150 Ω input (WECO: 2 C 12)	7.8.3.3
3 C 4	Frequency response 20 dB divider (also 3 P 1)	7.8.4.3
3 C 8	Frequency response 40 dB divider (also 3 P 8)	7.8.4.3
3 C 23	Frequency response 0 dB amplifier 1 (also 3 P 2)	7.8.4.3
3 C 25	Frequency response +10 dB amplifier 1 (also 3 P 3)	7.8.4.3
3 C 28	Frequency response +20 dB amplifier 1 (also 3 P 4)	7.8.4.3
3 P 1	Frequency response 20 dB divider (also 3 C 4)	7.8.4.3
3 P 2	Frequency response 0 dB amplifier 1 (also 3 C 23)	7.8.4.3
3 P 3	Frequency response +10 dB amplifier 1 (also 3 C 25)	7.8.4.3
3 P 4	Frequency response +20 dB amplifker 1 (also 3 C 28)	7.8.4.3
3 P 5	DC operating point of the pre-amplifier	7.8.4.1
3 P 6	Wideband level at the pre-amplifier output	7.8.4.4
3 P 8	Frequency response 40 dB divider (also 3 C 8)	7.8.4.3
4 C 1	10 MHz TP input capacitance	7.8.5
4 C 3	10 MHz TP peak at 48.8 MHz (also 4 L 1)	7.8.5
4 C 6	10 MHz TP peak at 21.9 MHz (also 4 L 2)	7.8.5
4 C 10	10 MHz TP peak at 20.1 MHz (also 4 L 3)	7.8.5
4 C 14	10 MHz TP peak at 27.7 MHz (also 4 L 4)	7.8.5
4 C 17	10 MHz TP output capacitance	7.8.5
4 L 1	10 MHz TP peak at 48.8 MHz (also 4 C 3)	7.8.5
4 L 2	10 MHz TP peak at 21.9 MHz (also 4 C 6)	7.8.5
4 L 3	10 MHz TP peak at 20.1 MHz (also 4 C 10)	7.8.5
4 L 4	10 MHz TP peak at 27.7 MHz (also 4 C 14)	7.8.5
5 C 9	40 MHz resonant circuit in mixer 1	7.8.6
5 C 20	Residual carrier in mixer 1	7.8.6
5 C 21	Residual carrier in mixer 1	7.8.6

Fig. 7.8-1 List of alignment elements

Alignment element	Alignment	Section
7 C 6	40 MHz crystal band-pass filter: peak at 40.0185 MHz	7.8.7
7 C 7	40 MHz crystal band-pass filter: peak at 40.0215 MHz	7.8.7
7 L 2	40 MHz crystal band-pass filter:	7.8.7
7 L 5	40 MHz crystal band-pass filter:	7.8.7
7 L 6	40 MHz crystal band-pass filter: Resid. atten. at 40 MHz	7.8.7
7 0 1	40 MHz crystal band-pass filter: and attenuation profile	7.8.7
7 0 2	40 MHz crystal band-pass filter:	7.8.7
8 P 1	Residual carrier mixer 2	7.8.8
9 L 1	10 kHz band-pass filter	
9 L 2	10 kHz band-pass filter	
9 L 3	10 kHz band-pass filter	
9 L 4	10 kHz band-pass filter	
9 L 5	10 kHz band-pass filter	
9 L 6	10 kHz band-pass filter — Attenuation profile of the 10 kHz band-pass filter	
9 L 7	10 kHz band-pass filter — b = 3.1 kHz (aligned as assembly by manufacturer)	
9 L 8	10 kHz band-pass filter	
9 L 9	10 kHz band-pass filter	
9 L 12	10 kHz band-pass filter	
9 L 13	10 kHz band-pass filter	
9 0 1	10 kHz band-pass filter	
9 P 1	Residual attenuation alignment for b = 1.74 kHz (1.95 kHz)	7.8.9
10 C 51	Calibrating level frequency response	7.8.15.1
10 C 52		
10 L 3	40 MHz resonant circuit for signal conditioning	7.8.15.1
10 L 4		
10 P 1	(Selective) calib. level and signal for PSE absolute	7.8.15.2
10 P 2	Wideband calib. level (10 kHz square-wave) absolute	7.8.15.3
11 C 6	Frequency response of carrier (40...50 MHz) for calib.	7.8.13
11 C 8	mixer and backplane [34]	
12 C 4	10 MHz resonant circuit on multiplier	7.8.14
12 L 2	40 MHz resonant circuit on multiplier	7.8.14
12 L 3		
12 C 64	Resonant circuit 13.3367 MHz = 40.01 MHz/3	7.8.14
12 L 5	Resonant circuit 40.01 MHz	7.8.14
12 L 6		
15 C 110	Frequency response of IF wideband amplifier	7.8.11.3
15 C 126	Frequency response of rectifier	7.8.11.4
15 P 1	Gain correction of IF (selective) amplifier	7.8.11.1

Fig. 7.8-1 List of alignment elements (contd.)

Alignment element	Alignment	Section
	Tracking generator, Series E...	
23 C 18	Frequency response of PSE amplifier	7.8.16.3
23 C 21	Frequency response of 20 dB divider	7.8.16.4
23 L 1 23 L 2	Pass-band ripple of 10 MHz low-pass filter	7.8.16.3
23 P 2	Absolute level (also 10 P 1)	7.8.16.7
23 P 3	Reference voltage for the digital/analog converter	7.8.16.2
23 C 1	Return loss 75 Ω output	7.8.16.1
23 C 3	Balance 124 Ω, 150 Ω (not fitted)	7.8.16.5
23 C 5	Balance 600 Ω	7.8.16.5
23 P 1	Frequency response 124 Ω	7.8.16.6
23 P 2	Frequency response 600 Ω (not fitted) (n.a. for WECO version)	7.8.16.6
23 P 3	Frequency response 150 Ω (normal version); 600 Ω (WECQ vers.)	7.8.16.6

Fig. 7.8-1 List of alignment elements (contd.)

Alignment operations and test measurements after replacing assemblies

Assembly	Series	Designation	Shown in circuit diagram	Alignment and test acc. to Section
955- A	A	Power supply	1	7.8.2
A1	B...	Power supply	1	7.8.2
B	A...	Input circuitry	20	
C	A...	Display logic	19	
D	A...	Level display	20	
E	A	RF controller	13	
E1	B...	RF controller	13	
F	A	CPU board	21	
F1	(A) B...	CPU board	21	
G	A...	Wiring board	1	
H	A...	Level switch	20	
J	A...	IF evaluation circuit	15	7.8.11
K		10 kHz BP filter/25 Hz mech.	22	7.8.10
K1		10 kHz BP filter/25 Hz mech.	22	7.8.10
L	E...	Input section 1-US (955/02 only)	2	7.8.3
M	A...	Pre-amplifier	3	7.8.4
N	A...	10 MHz low-pass filter 1	4	7.8.5

Fig. 7.8-2 Alignment operations after replacing assemblies

Assembly	Series	Designation	Shown in circuit diagram	Alignment and test acc. to Section
955- 0	A...	10 MHz low-pass filter 2	4	7.8.5
R	A...	Mixer 1	5	7.8.6
S	A...	Carrier limiter 1	6	
T	A...	40 MHz crystal band-pass filter 1	7	7.8.7
U	A...	40 MHz crystal band-pass filter 2	7	7.8.7
V	A...	40 MHz crystal band-pass filter 3	7	7.8.7
W	A...	40 MHz crystal band-pass filter 4	7	7.8.7
X	A...	40.01 MHz VCO	12	7.8.14
Y	A...	40.01 MHz PLL	12	7.8.14
Z	A...	Multiplier	12	7.8.14
AA	A...	Buffer amplifier	11	7.8.13
AB	A...	10 kHz band-pass filter	9	7.8.9
AC	A...	Mixer 2	8	7.8.8
AD	A...	Carrier limiter 2	8	
AE	A...D	Calibrating mixer	10	7.8.15
AE1	E...	Calibrating mixer	10	7.8.15
AF	A, B	Input section 1	2	7.8.3
AF	C...	Input section 1 (board outp. 4...)	2	7.8.3
AG	A, B	Input section 2	2	7.8.3
AG	C...	Input section 2 (board outp. 2...)	2	7.8.3
AJ	A...	Switch wiring	1	
AL	A...	Input filter	2	
AM	A, B	Interface	14	
AM1	C...	Interface	14	
		Display meter	19	7.8.12
AH	A...	DC converter	23	
AK	A...D	PSE amplifier	23	7.8.16
AN	A...D	Filter 1	23	7.8.16
AO	A...D	Filter 2	23	7.8.16
AP	A...	PSE filter	23	
AT	E...	PSE amplifier	23	7.8.16
AU	E...	Output field, normal version	25	7.8.16
AV	E...	Output field, WECO Vers. (only in 955/02)	25	7.8.16

Fig. 7.8-2 Alignment operations after replacing assemblies (contd.)

7.8.2 POWER SUPPLY: TRIPPING THRESHOLDS FOR UNDERVOLTAGE (1 P 1, 1 P 2)

Instruments required:

Current measuring adaptor	PG1-955	W&G
Digital multimeter	any	
Variable-ratio transformer	any	
Power supply 8 V ... 20 V/4 A	any	

Functional check:

Operate the instrument in line mode with rated voltage. Use the current measuring adaptor to measure voltages and currents:

+12 V $\pm$ 100 mV; $\leq$ 430 mA

-12 V $\pm$ 100 mV; $\leq$ 45 mA

+5 V dig. $\pm$ 50 mV; $\leq$ 400 mA

+5 V analog $\pm$ 50 mV; $\leq$ 150 mA (without PSE), $\leq$ 520 mA (PSE "on")

Alignment of the line tripping threshold (1 P 1):

Switch [4] to "unblanked"; PSE "on", IEC bus or dummy load plugged in. Gradually increase the voltage on the variable-ratio transformer and align the tripping threshold of the 5 V controller with 1 P 1 to 186 V $\pm$ 1 V for voltage selector on 220 V

83 V $\pm$ 1 V for voltage selector on 110 V .

Alignment of the battery tripping threshold (1 P 2)

Instrument settings as above.

Power supply to the SPM-15 via battery jack [32] with power supply (8 ... 20) V. Align the tripping threshold of the 5 V controller in "battery" mode to 12 V $\pm$ 0.2 V.

7.8.3 INPUT SECTION (2)

7.8.3.1 Return loss 75 Ω (2 C 2, for WECO instruments: 2 C 14)

Instruments required:

Level meter	SPM-19	W&G
Level generator	PS-19	W&G
Display unit	SG-3 or SG-4	W&G
Return loss measuring attachment	RFZ-5/BN 394	W&G

Test set-up:

Connect PS-19, SPM-19/Z_o = 75 Ω to RFZ-5

Settings:

PS-19: +1 dB/75 Ω; ext. frequency control

SPM-19: f_{start} = 10 kHz, f_{stop} = 10 MHz
b = 3.1 kHz/80 dB scale, Z = 75 Ω

SPM-15: f any, measuring range 0 dBm, 20 dB scale

Measurement:

Determine reference level for open RFZ-5,

Return loss at 10 kHz $\geq$ 52 dB

Return loss 10 kHz ... 10 MHz $\geq$ 40 dB Align with 2 C 2 (or 2 C 14)

Also refer to the RFZ-12/BN 810 Operating Instructions for further details on measurement

7.8.3.2 Signal balance ratio 600 Ω, 124 Ω (2 C 3, 2 C 5, for WECO instruments: 2 C 1, 2 C 3)

Instruments required:

Level meter	SPM-19	W&G
Level generator	PS-19	W&G
Signal balance ratio measuring attachment	SDZ-12/BN 811	W&G

Test set-up:

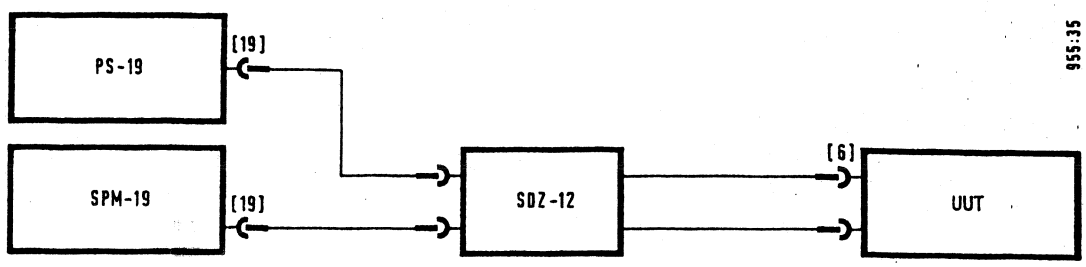

SPM-19: DGTL; Z_o = ∞ , f = 500 kHz, 5 MHz
PS-19: 0 dB/Z_o = 75 Ω; f = 500 kHz, 5 MHz
SPM-15: Z_o = 600 Ω, Z = 124 Ω; f = 500 kHz, 5 MHz
Measuring range -50 dBm/20 dB scale
Refer to the SDZ-12/BN 811 Operating Instructions for details on the test set-up

Measurements:
Z = 600 Ω, at 500 kHz; align 2 C 3 (WECO: 2 C 1) to min. level display
Z = 124 Ω, at 5 MHz; align 2 C 5 (WECO: 2 C 3) to min. level display

a_B (in dB) = Send level (SPM-19) - Receive level (UUT)

7.8.3.3 Frequency responses 124 Ω, 150 Ω, (135 Ω), 600 Ω (2 C 11, WECO: 2 C 12)

Instruments required:

Level generator	PS-19	W&G
EPM-1 with TKS-10, TKSA-124, 150, 600		W&G

Test set-up:
Connect the output of the PS-19 directly to the balanced test input of the SPM-15.

(a) Frequency responses 124 Ω, 150 Ω (135 Ω for 955/00.21)

Settings:
PS-19: 0 dBm/124 Ω, 150 Ω (BAL I)
PS-19 and SPM-15: f = 0.1 MHz, f_{step} = 1.98 MHz
SPM-15: b = 3.1 kHz/0 dBm/1 dB scale
Z_o = 124 Ω, 150 Ω

Measurements:
Measure the level of the PS-19 directly with the EPM-1, TKS-10 and TKSA-"Z_o" and note the level values at f = 0.1/2.08/4.06/6.04/8.02/10 MHz. Feed the UUT from the PS-19, determine the measuring error of the SPM-15 after calibration.
For Z = 124 Ω, align frequency response to ± 10 mB with 2 C 11 (WECO: 2 C 12)
For Z = 150 Ω, check frequency response for ± 10 mB tolerance.

(b) Frequency response 600 Ω (WECO version: additionally 135 Ω) (check only)

Settings:
PS-19: 0 dBm/600 Ω, (150 Ω) BAL II
PS-19 and SPM-15: f = 10 kHz,
SPM-15: b = 3.1 kHz/0 dBm/1 dB scale
Z_o = 600 Ω, (135 Ω)

Measurements:
Measure the level of the PS-19 directly with the EPM-1, TKS-10 and TKSA-600 (150) and note the level values at f = 10/210/410/610 kHz.
Feed the UUT from the PS-19, determine the measuring error of the SPM-15 after calibration.
Permissible tolerances: Z_o = 600 Ω, f = 10 kHz: ± 10 mB;
PS-19: Z_o = 150 Ω, SPM-15: Z_o = 135 Ω; f = 210, 410, 610 kHz: ± 25 mB
f = 10 kHz: -0.5 dB ± 10 mB;
f = 210, 410, 610 kHz: -0.5 dB ± 25 mB

7.8.4 PRE-AMPLIFIER (3)

7.8.4.1 DC operating point (3 P 5)

Instruments required:
Digital voltmeter — any

UUT setting:
Close switch 3 S 1, 3 S 2

Alignment:
Use 3 P 5 to set to voltage at 3 TP 3 to 4.5 V ± 10 mV
Check: U (3 TP 1) = 4.8 ... 5.3 V, U (3 TP 2) = 3.9 ... 4.3 V

Fine alignment may be carried out to optimize the distortion products:
Using the generator, feed 0 dBm/75 Ω, f any < 5 MHz, a_{k2} > 80 dB into the test input of the UUT and measure at 2f; align to minimum level display with 3 P 5 (b = 25 Hz/measuring range -50 dBm/20 dB scale).

7.8.4.2 Absolute accuracy of dividers, amplifiers (check only)

Instruments required:

Level generator	PS-19/BN 870	W&G
Level meter	SPM-19/BN 829	W&G
MONEX	MONEX	W&G
Cable and adaptor board for MONEX	PG 19-955	W&G

Test set-up:
Feed the test input of the UUT with PS-19/Z_o = 75 Ω and measure at the IF output [35] of the UUT with SPM-19/Z_o = 75 Ω.

Settings:
PS-19: f = 10 kHz, level as per Table
SPM-19: b = 3.1 kHz/measuring range -29 dB/1 dB scale
f = 10 kHz, CAL OFF
SPM-15: Wideband, f any, CAL OFF

Measurement:

PS-19	MONEX	V_{RF}	V_{dBm}	SPM-19
-40 dB	S:9210, S:9390	0 dB	0 dB	Read reference value
-20 dB	S:9212	-20 dB	0 dB	} Reference value ± 10 mB
0 dB	S:9214	-40 dB	0 dB	
-50 dB	S:9201	+10 dB	0 dB	
-60 dB	S:9202	+20 dB	0 dB	
-40 dB	S:9210	0 dB	0 dB	CAL ON, "Abs-Ref" measurement
-40 dB	S:9391	0 dB	9.03 dB	"Ref" +9.03 dB ± 10 mB
-40 dB	S:9392	0 dB	6.85 dB	"Ref" + 6.85 dB ± 10 mB
-40 dB	S:9393	0 dB	6.02 (6.48) dB	"Ref" + 6.02 (6.48) dB ± 10 mB

7.8.4.3 Frequency responses of dividers, amplifiers

Instruments required:

Level generator	PS-19/BN 870	W&G
Level meter	SPM-19/BN 829	W&G
MONEX	MONEX	W&G
Display unit	SG-4/BN 957	W&G
Cable and adaptor board for MONEX	PG 19-955	W&G

Test set-up:
Feed the test input of the UUT with PS-19/Z = 75 Ω and measure at the IF output [35] of the UUT with SPM-19/Z = 75 Ω.

Settings:
PS-19: ext. frequency control from SPM-19, level as per Table
SPM-19: b = 3.1 kHz/measuring range -29 dB/1 dB scale
f_{start} = 10 kHz, f_{stop} = 10 MHz, CAL OFF
SPM-15: Wideband, f any, CAL OFF

Measurements:
Record and store intrinsic frequency response of PS-19 (-29 dB) - SPM-19 (reference frequency response)

Measurement:

PS-19	MONEX	V_{RF}	V_{dBm}	Alignment elements	SPM-19/SG-4
-40 dB	S:9210, S:9390	0 dB	0 dB	3 P 2, 3 C 23	Ref. frq. resp. ± 0.1 dB
-20 dB	S:9212	-20 dB	0 dB	3 P 1, 3 C 4	
0 dB	S:9214	-40 dB	0 dB	3 P 8, 3 C 8	
-50 dB	S:9201	+10 dB	0 dB	3 P 3, 3 C 25	
-60 dB	S:9202	+20 dB	0 dB	3 P 4, 3 C 28	Ref. frq. resp. ± 0.2 dB
-40 dB	S:9210	0 dB	0 dB	-	-
-40 dB	S:9391	0 dB	9.03 dB	poss. 3 R 60 ‖ 10 pF	"ABS-REF" meas. 10 kHz
-40 dB	S:9392	0 dB	6.85 dB	poss. 3 R 62 ‖ 6.8 pF	Ref. frq. resp. ± 0.15 dB
-40 dB	S:9393	0 dB	6.02 (6.48) dB	-	

Note on frequency response alignment: first set potentiometer to centre position

7.8.4.4 Absolute level of the wideband output (3 P 6)

Instruments required:

Level generator	PS-19/BN 870	W&G
MONEX	MONEX	W&G
Cable and adaptor board for MONEX	PG 19-955	W&G

Measurement: (at f = 10 kHz)
Feed PS-19/0 dBm, 75 Ω into SPM-15 (wideband, 0 dBm, 1 dB scale).
MONEX S:9394 (calibrating controller at "centre")
Use 3 P 6 to align the UUT display to 0 dBm.

Then align the wideband calibrating level (refer to Section 7.8.15.3)
After repairing or replacing the pre-amplifier, check the gain of the selective path (7.8.11.1) and the selective calibrating level (7.8.15.2)!

7.8.5 INPUT LOW-PASS FILTER 10 MHz (4)

Instruments required:

Level generator	PS-19/BN 870	W&G
Level meter	SPM-19/BN 829	W&G
Display unit	SG-3/SG-4	W&G
MONEX	MONEX	W&G
Cable and adaptor board for MONEX	PG 19-955	W&G
40 MHz generator or carrier output	PS/SPM-19/SPM-15	W&G

Test set-up:

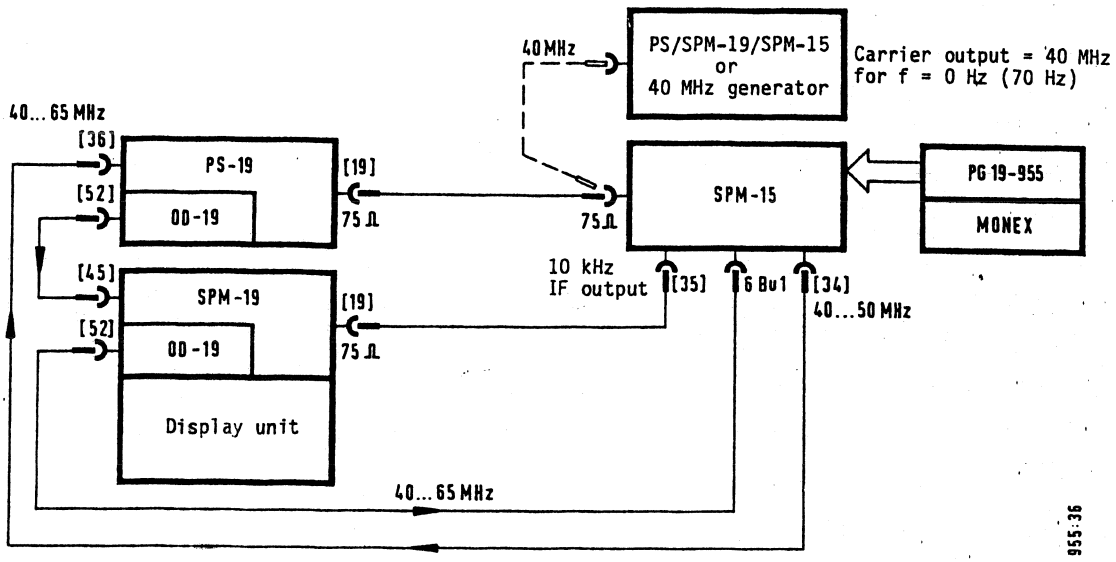

Settings:

PS-19: f = 10 kHz (receive frequency of the SPM-19)
-40 dB/75 Ω

SPM-19: f_{start} = 10 kHz
f_{stop} = 10 MHz
} Control of the PS-19 and the SPM-15
b = 3.1 kHz/measuring range 0 dBm/80 dB and 1 dB scale
Z = 75 Ω, CAL OFF

SPM-15: Z = 75 Ω, b = 3.1 kHz, CAL OFF

MONEX: S:9200 (V_{PF} = 0 dB)
S:9320 (V_{RF} = 20 dB)

(a) Alignment of stop peaks (4 C 3, 4 C 6, 4 C 10, 4 C 14)
Caution: Coils 4 L 1, L 2, L 3, L 4 are pre-aligned. Do not adjust!

f (SPM-19)	Align to minimum level display on SPM-19
20.1 MHz 21.9 MHz 27 MHz	with 4 C 10 with 4 C 6 with 4 C 14 } alternately
Disconnect PS-19, feed in 40 MHz	with 4 C 3

(b) Alignment of pass-band (4 C 1, 4 C 17)
Use 4 C 1 and 4 C 17 to align to minimum ripple 10 kHz ... 10 MHz:
Tolerance ± 0.1 dB (± 0.05 dB)

After repairing or replacing the input low-pass filter, check the gain of the selective path (7.8.11.1) and the selective calibrating level (7.8.15.2)!

7.8.6 MIXER 1 (5)

(a) 40 MHz resonant circuit (5 C 9)

Instruments required:

Level generator	PS-19/BN 870	W&G

Settings:

PS-19: f = 10 kHz, 0 dBm/75 Ω

SPM-15: b = 3.1 kHz/0 dBm

f = 10 kHz

Alignment:

Align 5 C 9 to maximum IF level (max. level display).

(b) Residual carrier (5 C 20, 21)

Settings on the SPM-15:

No input signal; b = 3.1 kHz (measuring range 0 dB/20 dB scale)

Alignment:

Fit twisted insulated single core Cu wires in the positions 5 C 20 or 5 C 21 (try out) and cut off to the length yielding the minimum residual carrier (always bend the wire ends apart to avoid shorting).

After replacing or repairing mixer 1, check the gain of the selective path (7.8.11.1) and the selective calibrating level (7.8.15.2)!

7.8.7 CRYSTAL BAND-PASS FILTER 40 MHz (7)

Instruments required:

Level meter	SPM-19	W&G
Level generator	PS-19	W&G
Display unit	SG-3 or SG-4	W&G

Test set-up:

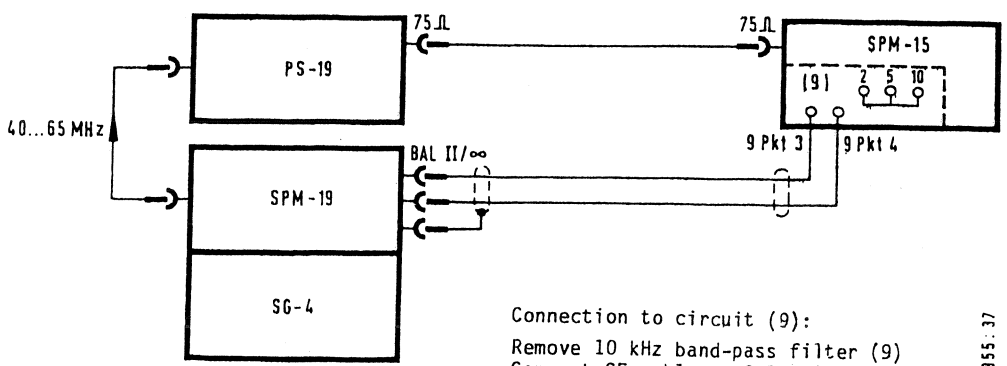

Connection to circuit (9):

Remove 10 kHz band-pass filter (9)
Connect CF cable to 9 Pt. 3,
9 Pt. 4

Connect 9 Pt. 2
and 5 to Pt. 10

955.37

(a) Alignment of the stop peaks (7 C 6, 7 C 7)

Settings:

SPM-15: Use PS-19 to feed into 75 Ω input
b = 3.1 kHz/measuring range 0 dBm/20 dB scale/CAL OFF

SPM-19: BAL II/∞
b = 400 Hz/Auto Set/80 dB scale
f = 10 kHz

PS-19: +10 dBm/ext. frequency control

Measurement:

SPM-15 at f = 28.5 kHz; alignment: 7 C 6 to min. level display on SPM-19
SPM-15 at f = 31.5 kHz; alignment: 7 C 7 to min. level display on SPM-19

(b) Alignment of pass band (7 L 2, 7 0 1, 7 0 2, 7 L 5)

Settings:

SPM-15: Use PS-19 to feed into 75 Ω input
f = 10 kHz
b = 3.1 kHz/measuring range 0 dBm/20 dB scale/CAL OFF

PS-19: 0 dBm/75 Ω, ext. frequency control

SPM-19: BAL II/∞
b = 400 Hz/Auto Set/1 dB and 20 dB scale
f_{start} = 5 kHz, f_{stop} = 15 kHz

Note:

The 5 kHz ... 15 kHz input signal is converted to 40.005 MHz ... 39.995 MHz in mixer 1. This signal passes through the pass band of the 40 MHz crystal band-pass filter and is again converted to the 5 kHz ... 15 kHz frequency range in mixer 2.

Alignment:

* Solder in output value for 7 L 6 = 15 µH
* Alternately align 7 L 2, 7 0 1, 7 0 2, 7 L 5 in such a way that the maximum output level is reached at the centre frequency (10 kHz).
* Continue to align carefully to extend the pass band in such a way that the following tolerances are maintained:

10 kHz	0 dB reference level
10 kHz ± 1.5 kHz	0 dB ... -0.4 dB, profile symmetrical to 10 kHz
7 kHz	-1.8 dB ... -3 dB
14.5 kHz	0 dB ... -3 dB

If the desired attenuation profile cannot be set: change 7 L 6 and repeat alignment.

After repairing or replacing the 40 MHz crystal band-pass filter, check the selective path (7.7.11.1) and the selective calibration level (7.7.15.2)!
Also check the selectivity of the overall instrument in the 3.1 kHz band-pass filter (Section 8.5)!

7.8.8 MIXER 2 (8)

Alignment of the residual carrier (8 P 1)

Instruments required:
Oscilloscope (≥ 100 MHz) with test probe, any
SPM-15: f any > 0 Hz
Connect test probe to 8 IC 2 Pin 6, 13 or 8 IC 2 Pin 7, 14, align RF voltage component to minimum with 8 P 1.

After repairing or replacing mixer 2, check the gain of the selective path (7.8.11.1) and the selective calibrating level (7.8.15.2).

7.8.9 BAND-PASS FILTERS 10 kHz/b = 3.1 kHz AND b = 1.74 kHz (9)

The pass-band curves of the band-pass filters are best adjusted by the manufacturer.
A check can be made in accordance with Section 7.5.4.

Pass-band attenuation alignment for b = 1.74 kHz (1.95 kHz) (9 P 1)

Instruments required:

Level generator	PS-19/BN 870	W&G
MONEX	MONEX	W&G
Cable and adaptor board for MONEX	PG 19-955	W&G

Test set-up:
Connect the PS-19/Z = 75 Ω to the test input of the SPM-15.

Settings:
PS-19: f = 100 kHz, 0 dBm/75 Ω
SPM-15: f = 100 kHz
Measuring range 0 dBm/1 dB scale
CAL OFF

Alignment:

SPM-15: b = 3.1 kHz MONEX: S:9394	Read reference value on instrument
SPM-15: b = 1.74 (1.95) kHz MONEX: S:9394	Align to reference value with 9 P 1

(The calibration controller is at the centre setting for both measurements)

After repairing or replacing the 10 kHz band-pass filter, check the gain of the selective path (7.8.11.1) and the selective calibration level (7.8.15.2)!

7.8.10 BAND-PASS FILTER 10 kHz/b = 25 Hz MECH. (22)

Alignment of 22 L 1 and pass-band attenuation alignment (22 P 1)

Instruments required:

Level generator	PS-19/BN 870	W&G
MONEX	MONEX	W&G
Cable and adaptor board for MONEX	PG 19-955	W&G

Test set-up:
Connect the PS-19/Z = 75 Ω to the test input of the SPM-15.

Settings:
PS-19: f = 100 kHz, 0 dBm/75 Ω
SPM-15: f = 100 kHz
Measuring range 0 dBm/1 dB scale
CAL OFF
SPM-15: Set to b = 25 Hz and align 22 L 1 to max. level display.
SPM-15: b = 3,1 kHz MONEX: S:9394 Read reference value on instrument
SPM-15: b = 25 Hz MONEX: S:9394 Align to reference value with 22 P 1
(The calibration controller is set to centre position for both measurements)

7.8.11 IF EVALUATION CIRCUIT (15)

7.8.11.1 Gain correction of the selective path (15 P 1)

Instruments required:

Level generator	PS-19/BN 870	W&G
MONEX	MONEX	W&G
Cable and adaptor board for MONEX	PG 19-955	W&G

Test set-up:
Connect the PS-19/Z_0 = 75 Ω to the Z_0 = 75 Ω test input of the SPM-15.

Settings:
PS-19: 0 dB/75 Ω, f = 12 kHz
SPM-15: f = 12 kHz
b = 3.1 kHz/measuring range 0 dB/1 dB scale
CAL OFF

Measurements:
MONEX: S:9394 -> Calibration controller at centre position, use 15 P 1 to align the display of the SPM-15 to 0 dB.
Alignment of the selective calibration level is described in 7.8.15.2.

7.8.11.2 IF selective amplifier (V_{IF} = 0 ... 80 dB) (check)

Instruments required:

Level generator	PS-19/BN 870	W&G
MONEX	MONEX	W&G
Cable and adaptor board for MONEX	PG 19-955	W&G
Attenuator pad 10 dB/Z = 75 Ω		

Test set-up:
Use the PS-19/Z_0 = 75 Ω to feed the 25 Hz filter 22 St. 1 via the 10 dB attenuator pad.

Settings:

SPM-15: b = 3.1 kHz/0 dBm/1 dB scale/CAL OFF

PS-19: Set send level (approx. -21 dB) in such a way that a value of roughly 0 dBm is displayed on the instrument

MONEX: A display of exactly 0 dBm can be achieved with S:9398 or S:9399 (calibration controller +, - 1 mB)

The IF gain and the send level of the PS-19 are switched through in 10 dB increments in accordance with the Table.

Measurement:

PS-19	MONEX	V_{IF}	SPM-15 display
approx. -21 dB	(S:9320)	20 dB	Reference value
-11 dB	S:9310	10 dB	}
-1 dB	S:9300	0 dB	}
-21 dB	S:9320	20 dB	} Reference value ± 5 mB
-31 dB	S:9330	30 dB	}
-41 dB	S:9340	40 dB	}
-51 dB	S:9350	50 dB	}
↓	↓	↓	
-81 dB	S:9380	80 dB	Reference value ± 0.1 dB

7.8.11.3 IF wideband amplifier (15 C 110), IF output [35]

Instruments required:

Level generator	PS-19/BN 870	W&G
Level meter	SPM-19/BN 829	W&G

Test set-up:

Use the PS-19 to feed into the 75 Ω input of the SPM-15. SPM-19 at IF output [35].

Settings:

PS-19: -20 dB/75 Ω
ext. frequency control of SPM-19

SPM-15: Wideband/-20 dB/1 dB scale
(If instrument with "dBrnC" option: -20 dBm, MONEX: S:9390)

SPM-19: b = 3.1 kHz/-9 dB/1 dB scale
f_{start} = 10 kHz/f_{stop} = 10 MHz
CAL OFF

Use 15 C 110 to align the frequency response at the IF output [3] to the lowest possible level change between send frequencies of 10 kHz and 10 MHz. Check the frequency response on the meter of the SPM-15. If necessary, also align the frequency of the rectifier in accordance with 7.8.11.4.

7.8.11.4 Rectifier (15 C 126, 15 P 101, 15 P 102, 15 P 103)

Instruments required:

Level generator	PS-19/BN 870	W&G
Digital voltmeter	any	

75 Ω attenuation set with 10 dB increments, accuracy ± 1 mB

(a) Offset 15 IC 110 (15 P 102)

Test set-up:

Break connection 9 Bu 2 - 22 St 1

Settings:

SPM-15: Measuring range 0 dB/dBm, b = 3.1 kHz

Alignment:

Set 15 P 101 to centre position, short test points 15 TP 8, TP9, connect digital voltmeter between 15 TP 10 and chassis, align 15 P 102 in such a way that the voltage value drifts slowly downwards.

(b) Rectifier offset (15 P 103)

Test set-up:

Break connection 9 Bu 2 - 22 St 1

Settings:

SPM-15: Measuring range 0 dB/dBm, b = 3.1 kHz

Alignment:

Close bridge 15 a-b

Use 15 P 103 to align voltage at 15 TP 12 to -5 ... -10 mV

(c) Rectifier linearity (15 P 101 and 15 P 201)

Test set-up:

PS-19 75 Ω attenuation set 15 St 102 of UUT

Settings:

PS-19: -20 dB/75 Ω, f = 10 kHz

SPM-15: Wideband

Measurements:

Alternately repeat the following alignments until the voltage tolerances for both input levels are maintained:

Attenuation set level = 0 dB: use 15 P 201 to align to 5.700 V ± 2 mV at 15 TP 12

Attenuation set level = -20 dB: use 15 P 101 to align to 0.570 V ± 2 mV at 15 TP 12

(d) Rectifier frequency response (15 C 126)

This presupposes an IF wideband amplifier correctly aligned in accordance with 7.8.11.3

Test set-up:

Re-make the connection 9 Bu 2 to 22 St 1.

Use the PS-19 to feed into the 75 Ω input of the SPM-15, measure voltage at 15 TP 12.

Settings:

PS-19: -20 dB/75 Ω; f = 10 kHz, f_{step} = 1 MHz

SPM-15: Wideband/-20 dB/1 dB scale

(For instruments with "dBrnC" option: -20 dBm, MONEX: S:9390)

Measurement:

f = 10 kHz: Voltage at 15 TP 12 and instrument display -> Reference values

f = 10 kHz ... 10.01 MHz: Observe voltage at 15 TP 12 and instrument display and align to minimum tolerance band with 15 C 126.

After re-alignment of the rectifier, align 15 P 1 (7.8.11.1)!

7.8.11.5 DC evaluation circuit (15 P 2xx)

Instruments required:

Level generator	PS-19/BN 870	W&G
Digital voltmeter	any	
MONEX	MONEX	W&G
Cable and adaptor board for MONEX	PG 19-955	W&G

75 Ω attenuation set with 1/10 dB increments, accuracy ± 1 mB

Test set-up:

PS-19 75 Ω attenuation set 15 St 102 of UUT

Settings:

PS-19: -20 dB/75 Ω, f = 10 kHz

SPM-15: Wideband/0 dB/20 dB scale

Measurements:

Gain alignment I5 IC 201 (15 P 201):

Alignment in accordance with "7.8.11.4(c) Rectifier linearity"

MONEX	Setting	Atten. set	Voltage at ...
	Calibration controller alignment		
0:25.80	Cal. controller "centre"	0 dB	15 TP 13 with 15 P 202 to -3.970 V ± 5 mV
0:25.00	Cal. controller Minimum	0 dB	15 TP 13 to -3.395 V ± 10 mV
0:25.FF	Cal. controller Maximum	0 dB	15 TP 13 to -4.537 V ± 10 mV
	Check of the 0/16 dB amplifier		
0:25.80	Cal. controller "centre"		
0:27.00	0 dB gain	0 dB	15 TP 14 to -3.970 V ± 5 mV
0:27.08	16 dB gain	-14 dB	15 TP 14 to -4.990 V ± 30 mV
	Alignment of (0 ... 11) dB cal. controller		
0:25.80	Cal. controller "centre"		
0:27.00	0/16 dB gain = 0 dB		
0:23.0F 0:24.FF	} Controller = 11 dB	-11 dB	15 TP 15 with 15 P 203 to U = 3.548 x U (15 TP 14)
Alignment of logarithmizer reference voltage: Align voltage at 15 TP 18 to +2.000 V ± 1 mV with 15 P 210			

	Logarithmizer alignment		
0:25.80	Cal. controller "centre"		
0:27.00	0/16 dB ampl. to 0 dB		
0:23.05 0:24.AC	Controller = +2 dB	-20 dB	Pre-align 15 TP 16 with 15 P 206 to -6.14 V ... -6.15 V
0:23.03 0:24.95	Controller = -2 dB	-20 dB	Note 15 TP 16 = U_x
0:23.05 0:24.AC	Controller = +2 dB	-20 dB	15 TP 16 with 15 P 206 to (U_x - 2 V) ± 5 mV
	Shift voltage for 0 dB/1 dB scale		
0:23.04 0:24.82	Controller = 0 dB	-20 dB	15 TP 17 with 15 P 205 to 0 V ± 10 mV
	0 dB/20 dB scale alignment (cf. mech. zero point 7.8.12)		
0:27.04	20 dB scale	-20 dB	with 15 P 211 to 0 dB/20 dB scale

After re-aligning the DC evaluation circuit, align 15 P 1 (7.8.11.1)!

7.8.11.6 Demodulator (15 C 424, 428, 15 P 401, 402)

Instruments required:

Level generator	PS-19/BN 870	W&G
Level meter	SPM-19/BN 829	W&G
Frequency counter	any	

Test set-up:

PS-19/Z_o = 75 Ω 75 Ω input of SPM-15
Demod. output 15 Bu 401, [14] SPM-19/Z_o = 600 Ω
Remote control of SPM-15 via jack 6 Bu 1 by carrier of PS-19

Settings:

PS-19: f = 10 kHz, 0 dB (or 0 dBm)/75 Ω
SPM-15: 0 dB (or 0 dBm)/20 dB scale
upper (◿) and lower (◺) sideband
SPM-19: Z_o = 600 Ω
f = 1.85 kHz
b = 400 Hz/measuring range 0 dB

(a) Alignment of the crystal oscillators (15 C 424, 15 C 428)

Use a frequency counter at 15 TP 20 to measure the frequency and align to
f = 12.1344 MHz at ◺ (lower sideband) with 15 C 424
f = 8.3456 MHz at ◿ (upper sideband) with 15 C 428

(b) Switch between upper and lower sideband and align the absolute level of the demodulator output to 0 dB ± 0.5 dB with 15 P 401.

(c) Residual carrier alignment (15 P 402)

Disconnect PS-19 from 75 Ω input; SPM-19: 80 dB scale
f = 8.15 kHz

Switch on "◿" upper sideband, use 15 P 402 to align to minimum level display on the SPM-19 (< -65 dB).

7.8.12 DISPLAY METER: MECHANICAL ZERO POINT (19)

SPM-15 settings:
b = 3.1 kHz/+20 dB or dBm/20 dB scale
f ≥ 10 kHz

Test input of UUT open, instrument in normal operating position

Using the mechanical zero point alignment element of the meter (plastic screw on the front panel), align the pointer to the scale mark above "- ∞ ".

7.8.13 BUFFER AMPLIFIER (11 C 6, 11 C 8), CARRIER OUTPUT [34]

Instruments required:

Oscilloscope with test probe ≥ 100 MHz	any
75 Ω terminating impedance	any

Settings:
SPM-15: Terminate carrier output [34] with 75 Ω
f = 0 kHz, f_{step} = 2500 kHz

Connect the test probe to the external 75 Ω impedance and align the amplitude response of the carrier signal with 11 C 6, 11 C 8. f = 0/2.5/5/7.5/9.999 999 MHz -> 200 mV peak ± 30 mV (The measurement can also be performed with a level meter (40 MHz ... 50 MHz, Z = 75 Ω): -6 dBm ± 1,5 dB)

7.8.14 40.01 MHz GENERATOR (12)

Instruments required:

Oscilloscope with test probe ≥ 100 MHz	any
Digitial multimeter	any

(a) Multiplier alignment (12 C 4, 12 L 2, L3)

Use 12 C 4 to align the 10 MHz signal at 12 TP 1 to maximum (approx. 3.5 V_{pp}); use 12 L 2, 12 L 3 to align the 40 MHz signal at 12 Pt. 12/12 Pt. 15 to maximum (approx. 1 V_{pp})

(b) 40.01 MHz VCO alignment (12 C 64, 12 L 5, 12 L 6)

Use 12 L 5, L 6 to align the 40.01 MHz signal at 12 Pt. 5 to maximum (approx. 0.5 V_{pp})
Use 12 C 64 to set the DC voltage at 12 TP 3 to 5.2 V.

(c) Checking the signal profile of the 40.01 MHz PLL

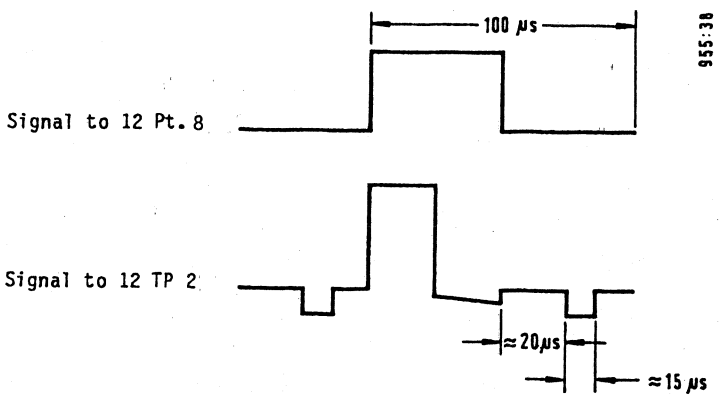

7.8.15 CALIBRATING MIXER (10)

7.8.15.1 Calibration level frequency response (10 C 51, 10 C 52)

Instruments required:

Level generator	PS-19/BN 870	W&G
Level meter	SPM-19/BN 829	W&G
Display unit	SG-4	W&G
75 Ω T branch		
Attenuator set 30 dB/Z = 75 Ω		
EPM-1 with TK-10	EPM-1	W&G
MONEX	MONEX	W&G
Cable and adaptor board for MONEX	PG 19-955	W&G

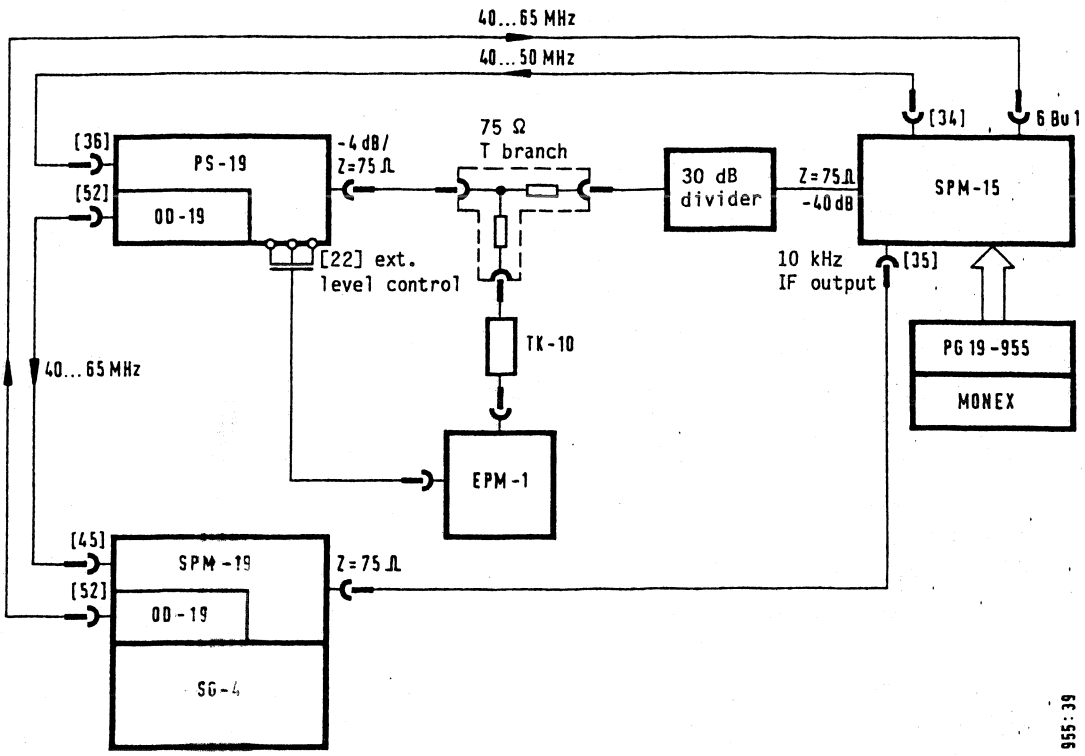

The actual calibration level frequency response, which states the measuring error of the instrument after a calibration operation, is obtained by forming the difference between the "Measurement" and "Calibration" frequency responses.

Settings:

PS-19: -4 dB/75 Ω
f = 10 kHz (receive frequency of the SPM-19)

SPM-19: f = 10 kHz (send frequency of the PS-19)
b = 3.1 kHz/-40 dB/1 dB scale
CAL ON

EPM-1: -1 dBm ± 0.2 dB

First measure with the SPM-19 directly at the output of the 30 dB attenuator pad. Adjust the control voltage of the EPM-1 in such a way that the SPM-19 measures -40 dB.

Establish the test set-up as shown in the sketch.

SPM-19: f_{start} = 12 kHz, f_{stop} = 10 MHz
(Sweep limits of the PS-19 and SPM-15)
b = 3.1 kHz/-9 dB/1 dB scale
CAL OFF

SPM-15: Z = 75 Ω, CAL OFF
b = 3.1 kHz/measuring range any

Measurement sequence:
MONEX: S:9108, calibration path switched through with V_{RF} = 0 dB, V_{IF} = +20 dB

If a new calibrating mixer board [955-AE,AE1] has been fitted, alternately align 10 L 3 and 10 L 4 to maximum level display on the SPM-19.

MONEX: S:9105, calibration switch in "Measurement" position, V_{RF} and V_{IF} unchanged
Use "Abs-Ref" measurement on the SPM-19 to position the measuring point at 12 kHz on a reference line of the SG-4.
Start the sweep in "Sweep time" = 300 sec (" ⌒ "); increase sweep rate after settling
Store as "Measurement" curve in store "B"!

MONEX: S:9108, switch through calibration path
For a newly fitted board, plug in the starting value for 10 C 12 = 39 pF.

The display mode can now be selected on the SG-4:
"A&B" displays both frequency responses
"A-B" displays the "Calibration-Measurement" differential frequency response

At f = 12 kHz, set the measuring point of the "Calibration" curve to the selected reference line with 10 P 1
SPM-19: "Sweep time" = 10 sec., "Sweep ⌒⌒ "

Check whether the two curves deviate by not more than 3 mB -> Differential frequency response 0 dB $\pm$ 3 mB

Align the frequency response with 10 C 51, 10 C 52. If the required tolerance is not achieved -> 10 C 12 = (33...47) pF. Occasionally check the test point at 12 kHz and re-align 10 P 1, if necessary.

Subsequently solder 10 C 12 firmly in position.

7.8.15.2 Absolute selective calibration level (10 P 1)

Do not carry out this alignment until the gain correction of the selective path (7.8.11.1) has been checked and/or aligned.

Instruments required:

Level generator	PS-19/BN 870	W&G
MONEX	MONEX	W&G
Cable and adaptor board for MONEX	PG 19-955	W&G
EPM-1 with TK-10	EPM-1	W&G

Settings:
PS-19: f = 12 kHz, 0 dBm/75 Ω
Measure the send level of the PS-19 with a calibrated EPM-1, use the PS-19 to feed the Z_o = 75 Ω test input of the SPM-15.
SPM-15: f = 12 kHz
b = 3.1 kHz/0 dBm/1 dB scale
CAL OFF

Coarse alignment:
MONEX: S:9390, V_{dBm} = 0 dB
S:9107, Switch through calibration level (V_{RF} = -40 dB, V_{IF} = +60 dB)
Use 10 P 1 for coarse alignment to 0 dB display

Fine alignment:
Exit monitor mode; settings as above.
Use the CAL key (press twice) to trigger calibration and check the UUT display for (send level of the PS-19) ± 1 mB.
If necessary, slightly re-align 10 P 1 and re-check the display after calibration.

Important note: Adjustment of 10 P 1 changes the absolute level of the tracking generator!

7.8.15.3 Absolute wideband calibration level (10 P 2)

Instruments required:

Level generator	PS-19/BN 870	W&G
EPM-1 with TK-10	EPM-1	W&G

Settings:
PS-19: f = 12 kHz
0 dBm/75 Ω
Measure the send level of the PS-19 with the calibrated EPM-1, then use the PS-19 to feed into the test input of the SPM-15
SPM-15: f any
"Wideband"/0 dBm/1 dB scale

Measurement:
Use the CAL key (press twice) to trigger calibration and check the UUT display.
Adjust 10 P 2 until the send level of the PS-19 is displayed to within ± 2 mB after calibration.

Note:
If the calibrating mixer board is replaced in an instrument with tracking generator, it is also necessary to re-align the fine level adjustment of the tracking generator (7.8.16.2)!

7.8.16 TRACKING GENERATOR, Series A ... D: (23), Series E ...: (23) and (25)

7.8.16.1 Return loss 75 Ω (Series A ... D: 23 C 33) (Series E ...: 25 C 1)

Instruments required:

Level generator	PS-19/BN 870	W&G
Level meter	SPM-19/BN 829	W&G
Display unit	SG-3 or SG-4	W&G
Return loss measuring attachment	RFZ-12/BN 810	W&G

Test set-up:
Connect PS-19/Z = 75 Ω, SPM-19/Z = ∞ to RFZ-12 (refer to RFZ-12 description).

Settings:
PS-19: 1 dB/75 Ω; ext. frequency control
SPM-19: f_{start} = 10 kHz, f_{stop} = 10 MHz
b = 3.1 kHz/80 dB scale; Z_o = ∞
Determine reference level for open RFZ-12
SPM-15: f = 0 kHz
Output Z_o = 75 Ω
Send level in dBm as per Table

Series	Send level	Return loss at 10 kHz	Return loss at 10 MHz
A...D	-15 dBm	> 53 dB	Use 23 C 33 to align to identical values
A...D	-20 dBm	> 53 dB	
E...	-15 dBm	> 53 dB	Use 25 C 1 to align to identical values
E...	-20 dB	> 53 dB	
E...	-45 dBm	> 53 dB	-

7.8.16.2 Accuracy of fine level adjustment and dividers
(Series A...D: 23 P 1, P 2, P 8; Series E...: 23 P 3)

Instruments required:
75 Ω attenuation set with (0.1)/1/10 dB increments, accuracy ± 1 mB

Level meter	SPM-19/BN 829	W&G
MONEX	MONEX	W&G
Cable and adaptor board for MONEX	PG 19-955	W&G

Test set-up:
Connect the output of the tracking generator to the Z_o = 75 Ω input of the SPM-19 via the attenuation set.

Settings:
SPM-15: f = 10 ... 100 kHz
PSE: Z_o = 75 Ω, send level in "dB" as per Table
SPM-19: f as for SPM-15
b = 3.1 kHz/1 dB scale
CAL OFF

Measurements for instruments of Series A ... D:

Send level	Attenuation of attenuation set	SPM-19 and alignment on the SPM-15
-9.5 dB -13.5 dB -9.5/-13.5	30.5 dB 26.5 dB 30.5/26.5 dB	SPM-19 measured value = reference value Align to reference value with 23 P 8 Repeat operation until level difference minimum
-14.0 dB -19.0 dB	26.0 dB 21.0 dB	SPM-19 measured value = reference value Align to reference value with 23 P 1 (5 dB divider)
-4.0 dB -14.0 dB -24.0 dB -34.0 dB	36.0 dB 26.0 dB 16.0 dB 6.0 dB	Reference value Error of 10 dB divider: ± 4 mB of 20 dB divider: ± 5 mB of 30 dB divider: ± 7 mB

Alignment ΔV_2 = +4 dB (23 P 2):
Connect PSE-15 to 600 Ω input of the SPM-19 via CF cable
PSE-15: $Z_o \approx 0$, send level = +7.0 dB
Use 23 P 2 to align level difference between +7.0 dB and +7.1 dB to 10 mB ± 1 mB.

Measurements for instruments of Series E ...:

The monitor functions allow the send level to be set in "dB" on instruments with the "dBrnC" option. In this case, the send levels should also be set in monitor mode.

Send level	Attenuation of attenuation set	SPM-19 and alignment on the SPM-15
-5.5 dB -14.5 dB -5.5/-14.5	49.0 dB 40.0 dB 49.0/40.0 dB	SPM-19 measured value = reference value Align to reference value with 23 P 3 Repeat operation until level difference minimum
-4.5 dB -14.5 dB -24.5 dB -29.5 dB -4.5 dB and MON. S:9584 -54.5 dB	50.0 dB 40.0 dB 30.0 dB 25.0 dB 10.0 dB 0.0 dB	Reference value Error of 10 dB divider: ± 4 mB of 20 dB divider: ± 4 mB of 25 dB divider: ± 6 mB*) of 40 dB divider: ± 6 mB*) Cumulative error 40 dB and 10 dB dividers

*) If 25 dB or 40 dB divider beyond tolerance: change 23 R 51 or 23 R 56, respectively.

7.8.16.3 Frequency response of 10 MHz low-pass filter and PSE amplifier without dividers

(Series A ... D: 23 L 201, L 302, C 5, C 26; Series E ...: 23 L 1, L 2, C 18)

Instruments required:

Level generator	PS-19/BN 870	W&G
Level meter	SPM-19/BN 829	W&G
Display unit	SG-4	W&G
EPM-1 with TK-10	EPM-1	W&G
75 Ω branch		W&G
5 dB attenuator pat/Z = 75 Ω	any	

(a) Natural frequency response of the SPM-19 in the -9 dB measuring range with test cable

Test set-up:

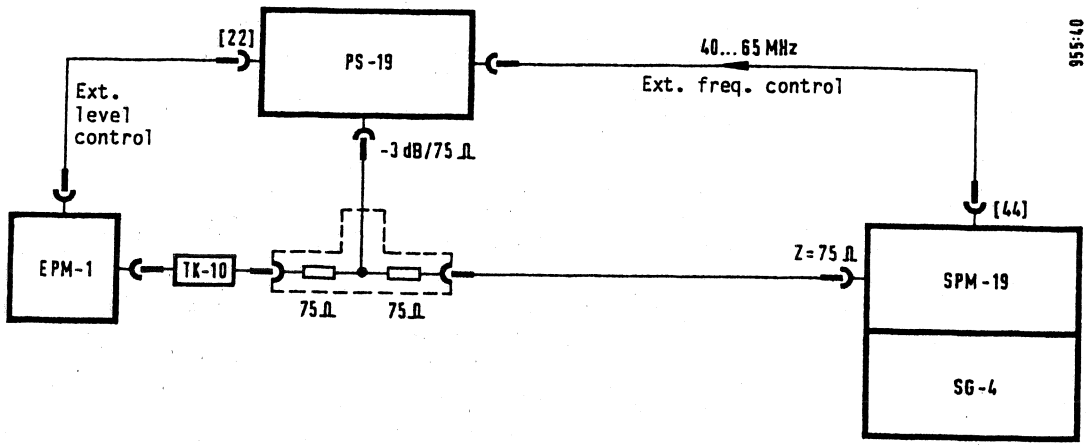

Settings:

PS-19: -3 dB/75 Ω; ext. frequency control

SPM-19: f_{start} = 10 kHz; f_{stop} = 13 MHz
b = 3.1 kHz/-9 dB/1 dB scale
CAL OFF

EPM-1: 0 dBm ± 0.2 dB
At f = 10 kHz use ref. potentiometer to set to -9.0 dB on the SPM-19

Record natural frequency response of SPM-19 with test cable and store in SG-4 store "B".

(b) Frequency response of tracking generator

Test set-up:

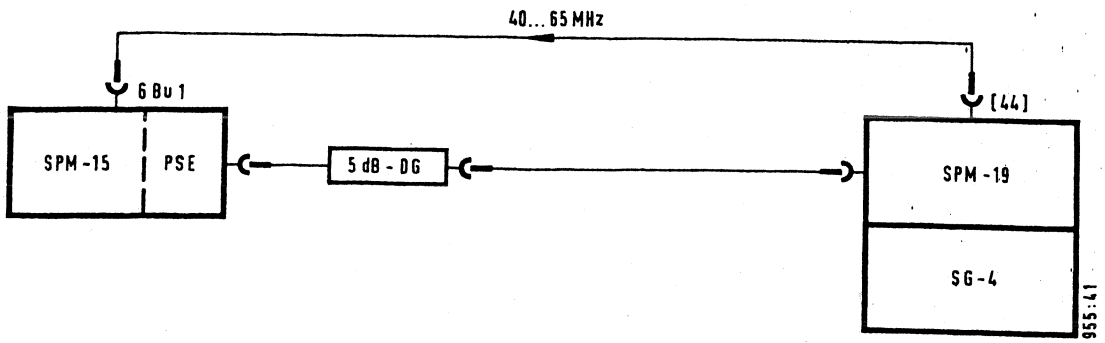

Settings:
SPM-19: No adjustments!
SPM-15: Send level = -4 dB

Alignment for instruments of Series A ... D:

First measure at 23 R 80 with digital voltmeter and set 23 P 4 to max. voltage display (minimum distortion).

SPM-19: f = 10 kHz; use 23 P 10 or 23 P 3 to align to -9.0 dB display on SPM-19.

Switch SG-4 to "A-B" display and sweep.

Use alignment elements 23 L 201, L 302, C 5 and C 26 to align the 10 kHz ... 10 MHz frequency response to a tolerance of 0 dB $\pm$ 10 mB.

Alignment for instruments of Series E ...:

For instruments with "dBrnC" option: send level = +5 dBm

SPM-19: f= 10 kHz; use 23 P 2 to align to -9.0 dB display on SPM-19.

Switch SG-4 to "A-B" display and sweep.

Use alignment elements 23 L 1, L 2, C 18 to align the 10 kHz ... 10 MHz frequency response to a tolerance of 0 dB $\pm$ 5 mB.

7.8.16.4 Frequency responses for all divider settings

(Series A...D: 23 C 22; Series E...: 23 C 21)

Instruments required:

Level meter	SPM-19/BN 829	W&G
Display unit	SG-4	W&G
5 dB attenuator pad/Z_0 = 75 Ω		
10 dB attenuator pad/Z_0 = 75 Ω		
20 dB attenuator pad/Z_0 = 75 Ω		
30 dB attenuator pad/Z_0 = 75 Ω		

Test set-up:

As under 7.8.16.3 (b), but attenuator pad value as per Tables below.

Settings:
SPM-15: Send level as per Table
SPM-19: f_{start} = 10 kHz, f_{stop} = 10 MHz
b = 3.1 kHz/AUTO SET/1 dB scale
CAL OFF

Alignment and test for instruments of Series A...D:

Send level	Attenuator pads	
0 dB	10 dB + 20 dB	Store reference frequency response in "B", "A&B"
-5 dB	5 dB + 20 dB	Reference frequency response ± 5 mB (reduction by 23 C 82 = 10...33 pF)
-20 dB	10 dB	Align with 23 C 22 to minimum deviation from reference frequency response (± 5 mB)
-10 dB	20 dB	Reference frequency response ± 5 mB
-30 dB	-	Reference frequency response ± 5 mB

Alignment and test for instruments of Series E...:

Send level "dB"	"dBm"	Attenuator pads	
0 dB	+5 dBm	20 dB + 30 dB	Store ref. frequency response in "B", "A&B"
-20 dB	-15 dB	30 dB	Align with 23 C 22 to minimum deviation from reference frequency response (± 5 mB)
-10 dB	-5 dBm	10 dB + 30 dB	Reference frequency response ± 5 mB
-25 dB	-20 dBm	5 dB + 20 dB	Reference frequency response ± 7 mB
-50 dB	-45 dBm		Reference frequency response ± 7 mB

7.8.16.5 Signal balance ratio 124 Ω, 150 Ω, (132 Ω), 600 Ω

(Series A...D: 23 C 40, C 50; Series E...: 25 C 3, C 5)

Instruments required:

Level meter	SPM-19/BN 829	W&G
Signal balance ratio measuring attachment	SDZ-12/BN 811	W&G
MONEX	MONEX	W&G
Cable and adaptor board for MONEX	PG 19-955	W&G

Test set-up:

PSE-15/bal. output	SDZ-12	SPM-19/Z_o = ∞

SPM-15: remote control via jack 6 Bu 1 by carrier output of SPM-19

Settings:
SPM-19: b = 3.1 kHz/0 dB/80 dB scale
Z_o = ∞

Instruments of Series A...D:

Z = 124 Ω: at f = 5 MHz, align 23 C 40 to minimum level display on SPM-19
Z = 600 Ω: at f = 500 kHz, align 23 C 50 to minimum level display on SPM-19
(a signal balance ratio of > 40 dB is required over the entire frequency range)

Instruments of Series E... (normal version):

Z = 124 Ω: at f = 5 MHz, check display of SPM-19 < -45 dB
Z = 600 Ω: at f = 500 kHz, align 25 C 5 to minimum level display of SPM-19

Instruments of Series E... (WECO version):

The following additional connectors are required for the SDZ-12:

WE 379 A	(Z = 124 Ω)	BN 810/00.03	W&G
PJ 1	(Z = 135 Ω)	BN 810/00.04	W&G
WE 310	(Z = 600 Ω)	BN 810/00.05	W&G

Z = 124 Ω, send level 0 dB ≙ +6.9 dBm, at f = 5 MHz, alignment with 25 C 3
Z = 600 Ω, send level 0 dB ≙ 0 dBm, at f = 500 kHz, alignment with 25 C 5
Z = 135 Ω, send level 0 dB ≙ +6.5 dBm, at f = 500 kHz, check
Level display of the SPM-19 for all measurements < -45 dB

7.8.16.6 Frequency responses 124 Ω, 150 Ω, (135 Ω), 600 Ω, $R_i \approx 0$

(Series A...D: 23 P 5, P 6, P 7; Series E...: 25 P 1, P 2, P 3)

Instruments required:

Level meter	SPM-19/BN 829	W&G
Milliwatt power meter	EPM-1	W&G
with TKS-10, TKSA-124, -150, -600		W&G
X-Y plotter	any	

Test set-up:

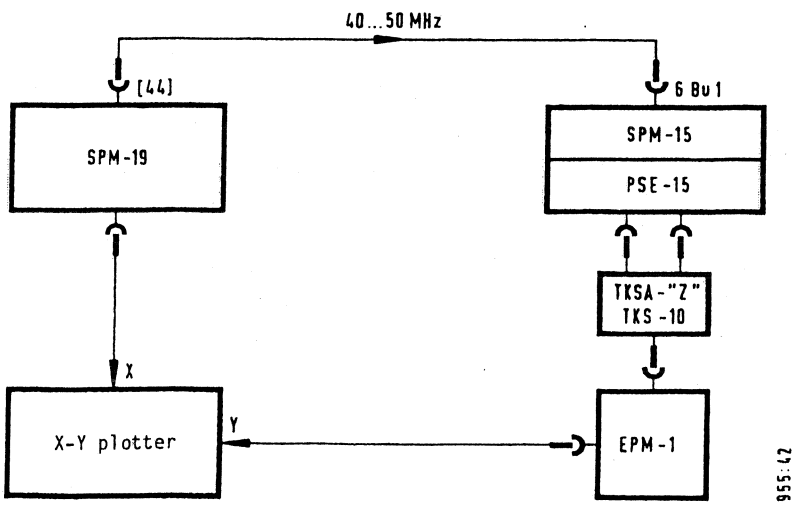

Settings:
SPM-19: f_{start} = 10 kHz, f_{stop} = 10 MHz or 620 kHz
EPM-1: No calibration required
SPM-15: Send level = 0 dBm

Measurements:
Switch on Z_o value at PSE-15 and use TKSA-"Z_o" for measurement.

Z_o = 124 Ω:
At f = 100 kHz, adjust the calibrating potentiometer to set the EPM-1 display to 0 dBm.
Align the 10 kHz ... 10 MHz frequency response to minimum deviation from the reference value at 100 kHz using 23 P 6 (Series A...D) or 25 P 1 (Series E...); tolerance: ± 12 mB.
(For WECO instruments: use TKSA-124 with connector WE 379 A (W&G).)

Z_o = 150 Ω:
Align to minimum deviation from the reference value at 100 kHz using 23 P 5 (Series A...D) or 25 P 3 (Series E...); tolerance at 10 kHz ... 10 MHz: ± 12 mB.

Z_o = 135 Ω in option 955/00.21 (135 Ω instead of 150 Ω):
Use TKSA-124 for measurement.
Align the 10 kHz ... 10 MHz frequency response with 25 P 3; tolerance: ± 12 mB; check alignment with TKSA-150.

Z_o = 135 Ω in WECO instruments (955/02):

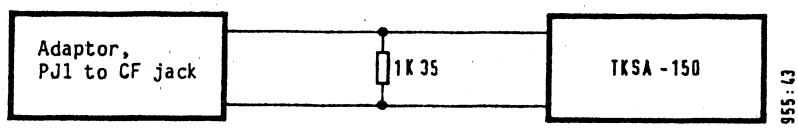

f = 10 kHz; set EPM-1 display to 0 dBm:
Adjust send level of PSE = +0,5 dBm and calibrating potentiometer on EPM-1. Select an appropriate 25 C 20 between 10 ... 100 pF to align the 10 kHz ... 620 kHz frequency response to a tolerance of +10 mB/-20 mB. Then solder 25 C 20 into position.

Z = 600 Ω:
For f = 10 kHz, set a display of 0 dBm on the EPM-1; check the f = 10 kHz ... 620 kHz frequency response for a tolerance of ± 15 mB. The frequency response can be reduced by an R/C parallel to the balanced output of the transformer. WECO instruments can be aligned with 25 P 3.

$R_i \approx$ 0/TKSA-600:
Align the frequency response by fitting 23 C 49 (Series A...D) or 25 C 6 (Series E...) with 10 pF ... 100 pF to a tolerance of ± 15 mB. Solder in the alignment value used.

7.8.16.7 Absolute level 0 dBm/75 Ω

(Series A...D: 23 P 3, P 10; Series E...: 23 P 2)

Instruments required:

Milliwatt power meter with TK-10	EPM-1	W&G

Settings:

SPM-15: f = 12 kHz
Send level = 0 dBm/75 Ω
EPM-1: Calibrate to 0 dBm

Measurement:

Measure the send level of the UUT with the EPM-1 and align to 0 dBm with 23 P 10 and 23 P 3 (Series A...D) or with 23 P 2 (Series E...).

8 SPECIFICATION CHECK

8.1 INTRODUCTION

The following is a description of methods allowing verification of the technical data of the instrument. Commercially available measuring equipment has been proposed wherever possible. The tests can only be performed on a fully functional instrument.

Unless otherwise noted, the tests and any adjustments necessary should be made within the specified nominal temperature range and after the specified warm-up time.

The purpose of verifying the technical data is to establish whether the display or output of measured variable lies within the specified error limits. The results can only be reliably accurate if the intrinsic error of the test set-up used is negligible. Wherever commercially available measuring equipment would result in significant errors in the test set-up, a second method is given using company-internal measuring equipment. These methods are headed "Internal Test".

When evaluating compliance with the specified error limits, the error of the test set-up used is added to the that of the point to be tested (IEC Publication 359).

The following example illustrates this principle for symmetrical error limits:
If the error of the test set-up used is $\pm$ m, and if $\pm$ e is stated as the specified error limit for the unit under test, then

a value exceeding the limits $\pm$ (e + m)
means that the specified error limits
will certainly be exceeded;

a value below the limits $\pm$ (e - m)
means that the specified error limits
will certainly be complied with.

Where necessary, the values for e and m are given for each test procedure. The value m depends on the measuring instrument used and must, therefore, be re-determined in cases of deviation from the test instructions.

When carrying out a systematic check of the technical data, we recommend that you adhere to the given sequence of measurements.
The unit under test should only be adjusted if it is found that the limit $\pm$ (e + m) is exceeded.

Notes on instruments settings

Unless otherwise stated for individual measurements, the following settings always apply:

SPM-15 (unit under test - UUT):

Input	[5] : Z = 75 Ω
Mode	DGTL : Digital
AUTO CAL	[1] : On
Frequency setting	[10] : Coarse
Display	[31] : dB

PSE-15 (unit under test - UUT):

Output	[11] : Z = 75 Ω

SPM-15 with PSE-15 (measuring equipment):
(or SPM-19/PSS-19)

Input	[5] : Z = 75 Ω
Mode	DGTL : Digital
AUTO CAL	[1] : On
Frequency setting	[10] : Coarse
Display	[31] : dB
Output	[11] : Z = 75 Ω

EPM-1:

Measuring range	: 0 dBm ± 0.2 dB

8.2 TUNING FREQUENCY ACCURACY

Measuring instruments required:

Level generator	SPM-15 with PSE-15	W&G
Frequency counter	PM 6673/03	Philips

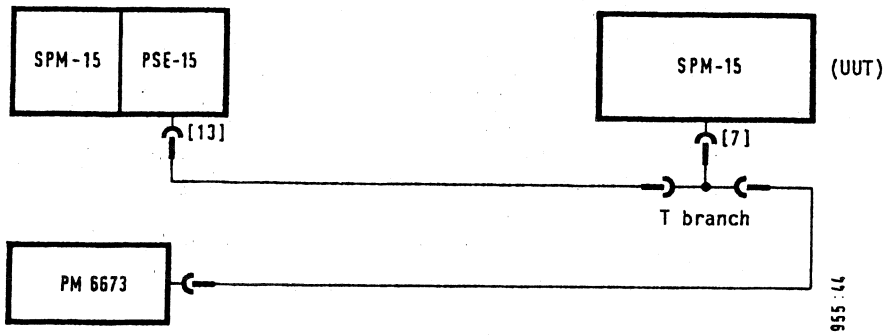

Fig. 8-1 Test set-up (tuning frequency accuracy)

Instrument settings:
SPM-15 (UUT):

Measurement mode	[9] : Selective/25 Hz
Frequency	[10] : 9.9 MHz
Mode	ANLG : 1 dB scale
Frequency setting	[10] : Fine

PSE-15:

Frequency	[10] : 9.9 MHz
Frequency setting	[10] : Fine
Send level	[9], [8] : 0 dB

PM 6673:

Frequency range	: 80 MHz
Resolution	: 1 Hz

Set the send frequency of the PSE-15 to 9.9 MHz on the frequency counter. Then tune the SPM-15 to give a maximum level display. Compare the difference between the frequency displays on the frequency counter and the SPM-15 (UUT) with the specified error limit.

Specified error limit (e): $3 \times 10^{-6} \cong 29.7$ Hz

Error of the test set-up (m): $\pm$ 6 Hz

The error of the test set-up includes the ageing of the frequency counter-over 6 months.

8.3 NOISE FLOOR

With the test input open-circuit, set the SPM-15 in accordance with the data in the table. The noise floor level of the SPM-15 should not exceed the error limits specified in the tables.

Frequency / Bandwidth	50 Hz	200 Hz	3 kHz	10 MHz
Wideband	-75 dB/-65 dB			
1.74 kHz/3.1 kHz	—			-125 dB/-115 dBm
25 Hz	-100 dB/-90 dBm	-115 dB/-105 dBm	-135 dB/-125 dBm	

Fig. 8-2 Table for checking the noise floor for Z_o = 75 Ω

Frequency / Bandwidth	6 kHz	10 MHz
Wideband	-65 dB/-60 dBm	
1.74 kHz/3.1 kHz	-115 dB/-110 dBm	
25 Hz	-125 dB/-120 dBm	

Fig. 8-3 Table for checking the noise floor for Z_o = 124/150 Ω

Frequency / Bandwidth	50 Hz	200 Hz	3 kHz	620 kHz
Wideband	-65 dB/dBm			
1.74 kHz/3.1 kHz	—			-110 dB/dBm
25 Hz	-90 dB/dBm	-105 dB/dBm	-125 dB/dBm	

Fig. 8-4 Table for checking the noise floor for Z_o = 600 Ω

8.4 LEVEL ACCURACY, SPM-15

8.4.1 ABSOLUTE ACCURACY, COAXIAL INPUT

Perform this measurement at an ambient temperature of 23 °C ± 3 K.

Measuring instruments required:

Level generator	SPM-15 with PSE-15	W&G
Milliwatt power meter	EPM-1	W&G
Test probe 75 Ω	TK-10	W&G

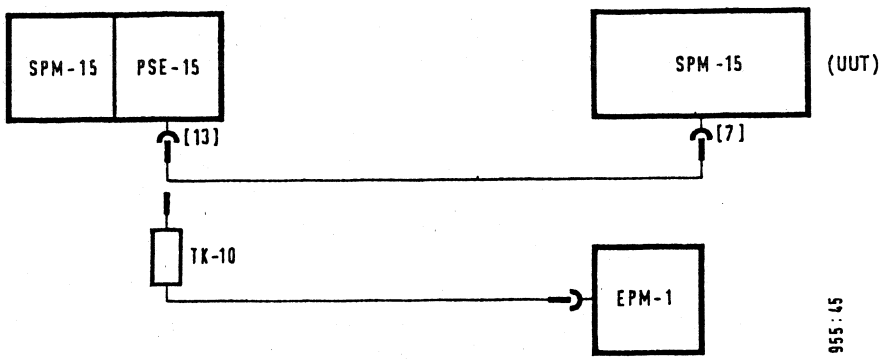

Fig. 8-5 Test set-up (absolute accuracy, coaxial)

Instrument settings:

SPM-15 (UUT):

Measurement mode	[9] : Selective/1.74 kHz
Frequency	[10] : 10 kHz
Display	[31] : dBm

PSE-15:

Frequency	[10] : 10 kHz
Send level	[9], [8] : 0 dBm

EPM-1:

Calibration level	: 0 dBm/R_i = 0

Before the measurement, first calibrate the EPM-1 and then connect it to the PSE-15 [13].

Check the send level of the PSE-15 with the EPM-1. Connect the SPM-15 [7] (UUT) to the PSE-15 [13] and trigger the calibration operation on the unit under test by pressing the "AUTO CAL" key [1] twice. Read the receive level on the SPM-15 and calculate the difference between the readings of the SPM-15 and the EPM-1.

Specified error limit (e): ± 6 mB
Error of the test set-up (m): ± 2 mB

Repeat the measurement with a bandwidth of 25 Hz.

Specified error limit (e): ± 11 mB
Error of the test set-up (m): ± 2 mB

8.4.2 ABSOLUTE ACCURACY, BALANCED INPUT

Perform the measurement at an ambient temperature of 23 °C ± 3 K.

Measuring instruments required:

Level generator	SPM-15 with PSE-15	W&G
Milliwatt power meter	EPM-1	W&G
Basic balanced test probe	TKS-10	W&G
Test probe adaptor	TKSA-124	W&G
Test probe adaptor	TKSA-150	W&G
Test probe adaptor	TKSA-600	W&G
Calibration adaptor	TKSE-124	W&G
Calibration adaptor	TKSE-150	W&G
Calibration adaptor	TKSE-600	W&G

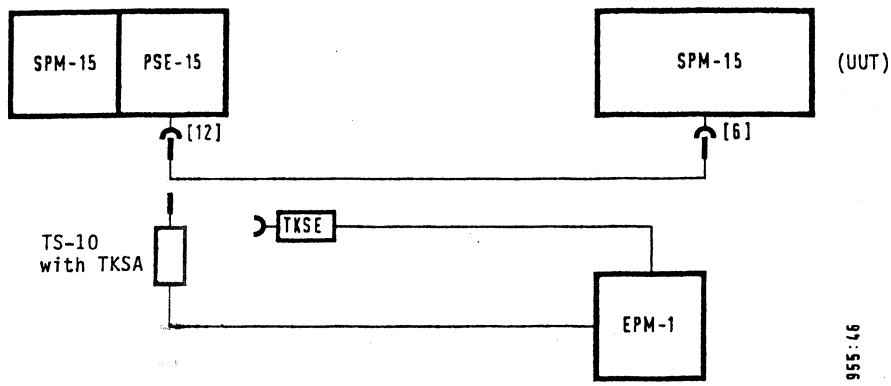

Fig. 8-6 Test set-up (absolute accuracy, balanced)

Instrument settings:

SPM-15 (UUT):

Input	[5] : Refer to table for Z value
Measurement mode	[9] : Selective/1.74 kHz
Display	[31] : dBm
Frequency	[10] : Refer to table

PSE-15:

Output	[11] : Refer to table for Z value
Frequency	[10] : Refer to table
Send level	[9], [8] : 0 dBm

EPM-1:

Calibration level	: Refer to table

Before the measurement, first calibrate the EPM-1 with the test probe adaptor via the calibration adaptor and then connect to the PSE-15 [12].
Check the send level of the PSE-15 with the EPM-1 and connect the SPM-15 [6] (UUT) to the PSE-15 [12]. Use the "AUTO CAL" key [1] on the unit under test to trigger the calibration process and read the receive level. Calculate the difference between the readings on the SPM-15 and the EPM -1.

Z value	Test probe adaptor	Calibration adaptor	EPM-1	Frequency	Specified error limit (e)	Error of test set-up (m)
124 Ω	TKSA-124	TKSE-124	0 dB/R_i = 0	100 kHz	± 10 mB	± 2 mB
150 Ω	TKSA-150	TKSE-150				
600 Ω	TKSA-600	TKSE-600	0 dB/R_i = 75 Ω	10 kHz		

Fig. 8-7 Table for verifying the absolute accuracy (balanced)

Repeat the measurement with a bandwidth of 25 Hz

Specified error limit (e): ± 15 mB
Error of test set-up (m): ± 2 mB

8.4.3 DIVIDER ERROR

Measuring instruments required:

Level generator	SPM-15 with PSE-15	W&G
Attenuation set 75 Ω	D 2053	Siemens

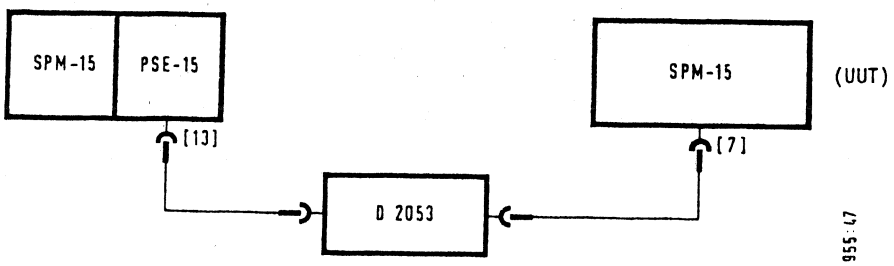

Fig. 8-8 Test set-up (divider test)

Instrument settings:

SPM-15 (UUT):

Measurement mode	[9] : Selective/3.1 kHz
Frequency	[10] : 10 kHz

PSE-15:

Frequency	[10] : 10 kHz
Send level	[9], [8] : 1 dB

D 2053:

Attenuation (residual attenuation)	: 1 dB

Set the attenuation set, generator and SPM-15 (UUT) in accordance with the following table and read the level display L on the SPM-15.
Deduct the value L_1 from the SPM-15 displays (UUT) L_2 to L_6 and the value $\Delta L = L_7 - L_6 + L_1$ from L_8 to L_{13} and compare with the set values.

PSE-15 L [dB]	D 2053 a [dB]	SPM-15 L [dB] Set value	SPM-15 L [dB] Display	Specified error limit (e)	Error of test set-up (m)
1	1	0	L_1	1st reference value	
↓	11	-10	L_2		
	21	-20	L_3		
	31	-30	L_4	1 ± 0.1 dB	± 0.2 dB
	51	-50	L_6		
-49	1	-50	L_7	2nd reference value	
↓	11	-60	L_8		
	21	-70	L_9	± 0.1 dB	
	31	-80	L_{10}		± 3 mB
	41	-90	L_{11}		
	51	-100	L_{12}	± 0.15 dB	
	61	-110	L_{13}	± 0.3 dB	± 5 mB

Fig. 8-9 Table for verifying the divider error

Technical note: The external attenuation has been limited to 50 (60) dB in order to avoid any measuring errors due to possible earth circuits.

8.4.4 FREQUENCY RESPONSE, COAXIAL INPUT

Measuring instruments required:

Level generator	SPM-15 with PSE-15	W&G
Milliwatt power meter	EPM-1	W&G
Test probe, 75 Ω	TK-10	W&G

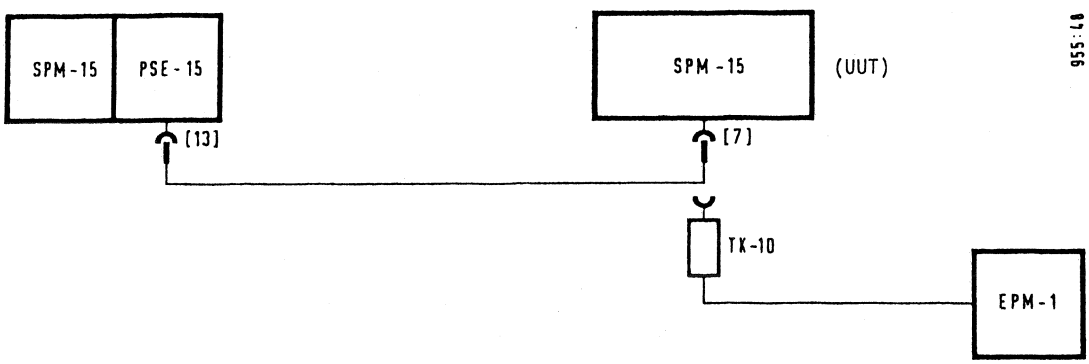

Fig. 8-10 Test set-up (frequency response, coaxial)

Selective measurement:

Instrument settings:

SPM-15 (UUT):

Measurement mode	[9] : Selective/25 Hz
Mode	ANLG : 1 dB scale
Display	[31] : dBm

PSE-15:

Send level	[9], [8] : 0 dBm

Recording the natural frequency response:

Connect the EPM-1 to the PSE-15 via the cable to be used for measuring the frequency response. Set the PSE-15 to a reference frequency of f = 10 kHz. Use the "Calibration" potentiometer to set the display on the EPM-1 to 0 dBm. Determine and note the natural frequency response of the PSE-15 at the frequencies stated in the table.

Measurement:

Connect the SPM-15 (UUT) to the PSE-15, using the same cable as for recording the intrinsic frequency response. Set a reference frequency of f = 10 kHz on the SPM-15 und PSE-15. Trigger the calibration operation with the "AUTO CAL" key [1] on the unit under test and store the level measured as the reference value using the "ABS -> REF" key [2]. Set "ABS-REF" measurement [2]. Tune the level display on the unit under test to maximum at the frequencies stated in the table. Calculate the difference between the values displayed and the values noted and compare with the specified error limit.

Frequency	Specified error limit (e)	Error of test set-up (m)
50 Hz	± 0.3 dB	± 2 mB
200 Hz 2; 100 kHz 1; 5; 10 MHz	± 0.08 dB	

Fig. 8-11 Table for verifying the frequency response error (coaxial/selective)

Wideband measurement

Changed settings:

SPM-15 (UUT):

Measurement mode	[9] : WIDEBAND

Repeat the measurement as described under "Selective measurement".

Frequency	Specified error limit (e)	Error of test set-up (m)
50; 200 Hz 2; 100 kHz 1; 5; 10 MHz	± 0.35 dB	± 2 mB

Fig. 8-12 Table for verifying the frequency response error (coaxial/wideband)

8.4.5 FREQUENCY RESPONSE, BALANCED INPUT

Measuring instruments required:

Level generator	SPM-15 with PSE-15	W&G
Milliwatt power meter	EPM-1	W&G
Basic balanced test probe	TKS-10	W&G
Test probe adaptor	TKSA-124	W&G
Test probe adaptor	TKSA-150	W&G
Test probe adaptor	TKSA-600	W&G
"T" branch	S 833	W&G

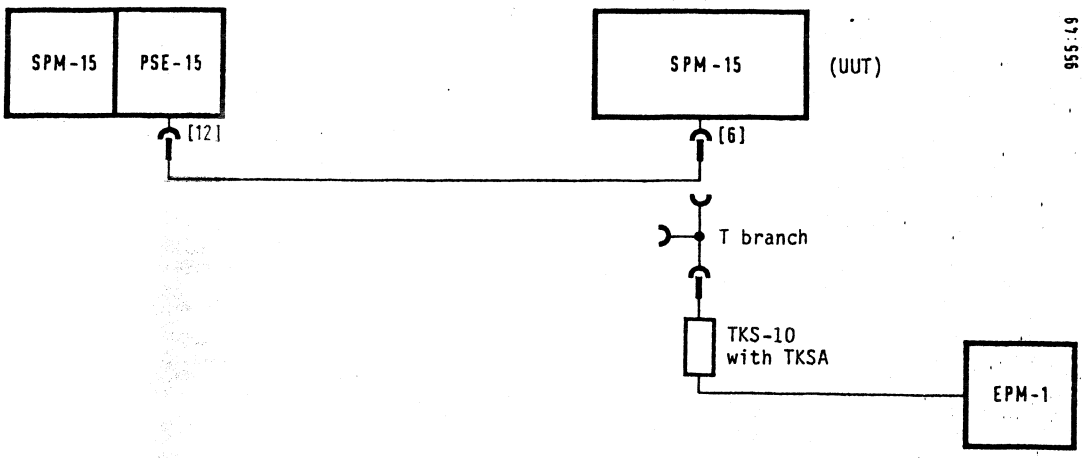

Fig. 8-13 Test set-up (frequency response, balanced)

Instrument settings:

SPM-15 (UUT):

Input	[5] : Refer to table for Z value
Measurement mode	[9] : Selective/25 Hz
Mode	ANLG : 1 dB scale
Display	[31] : dBm

PSE-15:

Output	[11] : Refer to table for Z value
Send level	[9], [8] : 0 dBm

Recording the natural frequency response:

Operate the TKS-10 with the corresponding test probe adaptor (table).
Connect the EPM-1 to the PSE-15 via the cable to be used for measuring the frequency response and the "T" branch. Proceed as described in Section 8.4.4; refer to table for reference frequency.

Measurement:

Proceed as described in Section 8.4.4; refer to table for reference frequency.

Frequency	Z_0 value	Test probe adapter	Reference frequency	Specified error limit (e)	Error of test set-up (m)
6 kHz	124 Ω 150 Ω	TKSA-124 TKSA-150	100 kHz	± 0.4 dB	+2/-3 mB
60 kHz 2 MHz	124 Ω 150 Ω	TKSA-124 TKSA-150		± 0.15 dB	
5, 10 MHz	124 Ω 150 Ω*	TKSA-124 TKSA-150			+2/-4 mB
50 Hz	600 Ω	TKSA-600	10 kHz	± 0.8 dB	+2/-3 mB
200 Hz				± 0.25 dB	
2 kHz				± 0.15 dB	
100 kHz 620 kHz				± 0.25 dB	

* The characteristic data of the EPM-1 are no longer guaranteed in this frequency range. The error of the test set-up may increase marginally.

Fig. 8-14 Table for verifying the frequency response error (balanced)

8.5 SELECTIVITY

Measuring instruments required:

Level generator SPM-15 with PSE-15 W&G

Instrument settings:

SPM-15 (UUT):

Measurement mode	[9] : Refer to table for bandwidth
Frequency	[10] : 100 kHz
Frequency setting	[10] : Fine

PSE-15:

Frequency	[10] : 100 kHz
Send level	[9], [8] : 0 dB

Connect the SPM-15 [7] (UUT) to the PSE-15 [13]. Set the frequency separation from the centre of the filter on the unit under test in accordance with the table and compare the level display with the specified error limit.

Bandwidth			Specified	Error of test set-up (m)
25 Hz	1.74 kHz	3.1 kHz	error limit (e)	
± 7 Hz	± 650 Hz	± 1.5 kHz	≤ 3 dB	negligible
± 80 Hz	–	–	≥ 50 dB	
± 250 Hz	± 2 kHz	± 2 kHz	≥ 60 dB	

Fig. 8-15 Table for verifying the selectivity

8.6 HARMONIC DISTORTION PRODUCTS

Measuring instruments required:

Level generator	SPM-15 with PSE-15	W&G
with		
Low-pass filter, Z = 75 Ω	300 Hz ≤ fg ≤ 1 MHz	
	Attenuation at 2fg und 3fg ≥ 50 dB	
	Intrinsic harmonic ratio ≥ 90 dB	

or equivalent low-distortion generator

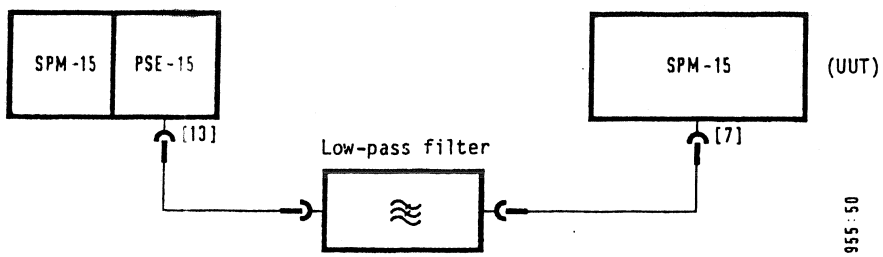

Fig. 8-16 Test set-up (harmonic distortion products)

Instrument settings:

SPM-15 (UUT):

Measurement mode	[9] : Selective/25 Hz

PSE-15:

Send level	[9], [8] : 0 dB

Set the basic frequency on the unit under test and on the PSE-15. Store the level on the unit under test as the reference value using the "ABS -> REF" key [2]. Set "ABS-REF" measurement [2]. Compare the intrinsic harmonic ratios a_{k2} and a_{k3} of the unit under test with the specified error limits at 2x and 3x the basic frequency.

Basic frequency	Specified error limit (e)	Error of test set-up (m)
300 Hz $\leq$ f < 3 kHz	$\geq$ 70 dB	$\pm$ 1 dB
3 kHz $\leq$ f $\leq$ 1 MHz	$\geq$ 80 dB	+3.5/-2.5 dB

Fig. 8-17 Table for verifying the harmonic distortion products

8.7 NOISE POWER RATIO

Measuring instruments required:

White noise generator	RS-25	W&G
Band limiting filter	RSB-12/8160	W&G
Bandstop filter	RSS-3886	W&G

Instrument settings:

SPM-15 (UUT):

Measurement mode	[9] : Selective/1.74 kHz
Display	[31] : dBm
Frequency	[10] : 3886 kHz
AUTO CAL	[1] : Off

RS-25:

Band limiting filter	[6] : On
Bandstop filter	: Off
Send level	[5] : -11 dBm

Connect the SPM-15 [7] to the RS-25 [1]. With the bandstop filter switched off, store the level on the SPM-15 as the reference value using the "ABS -> REF" key [2]. Set "ABS-REF" measurement [2]. Switch on the bandstop filter and compare the level on the SPM-15 with the specified error limit.

Specified error limit (e): $\geq$ 54 dB

Error of test set-up (m): $\pm$ 0.1 dB

8.8 MEASURING INPUTS

8.8.1 RETURN LOSS, COAXIAL INPUT

Measuring instruments required:

Level meter and	SPM-15 with PSE-15	W&G
Level generator		
Return loss measuring attachment	RFZ-5	W&G

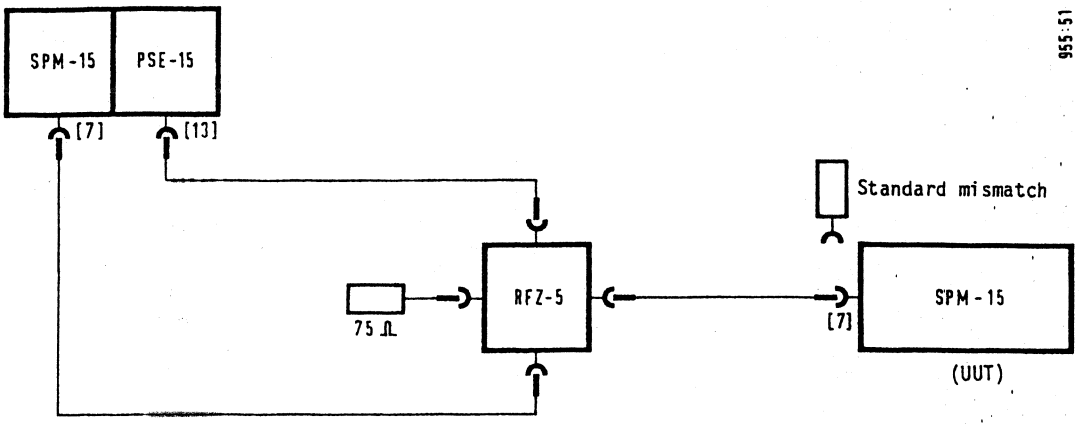

Fig. 8-18 Test set-up (Return loss, coaxial)

Instrument settings:

SPM-15 (UUT):

AUTO CAL	[1] : Off

SPM-15:

Measurement mode	[9] : Selective/25 Hz
Mode	ANLG : 20 dB scale

PSE-15:

Send level	[9], [8] : 0 dB

Align the intrinsic return loss in accordance with Section 3.3 of the RFZ-5 Description and Operating Instructions for a test frequency of 10 MHz.
Switch the SPM-15 to "digital" mode. Operate the RFZ with a standard mismatch (r = 0.1). Carry out a reference measurement at the test frequency. Store the level obtained as the reference value using the "ABS -> REF" key [2]. Set "ABS-REF" measurement [2]. Remove the standard mismatch and connect the RFZ-5 to the unit under test.

Return loss: $a_r = 20\ dB - a_{SPM-15}$

Repeat the measurement at a test frequency of 10 kHz.

Specified error limit (e):	$\geq$ 36 dB
Error of test set-up (m):	+2.2/-1.7 dB

8.8.2 RETURN LOSS, BALANCED INPUT

Measuring instruments required:

Level meter and	SPM-15 with PSE-15	W&G
Level generator		
Return loss measuring attachment	RFZ-12	W&G

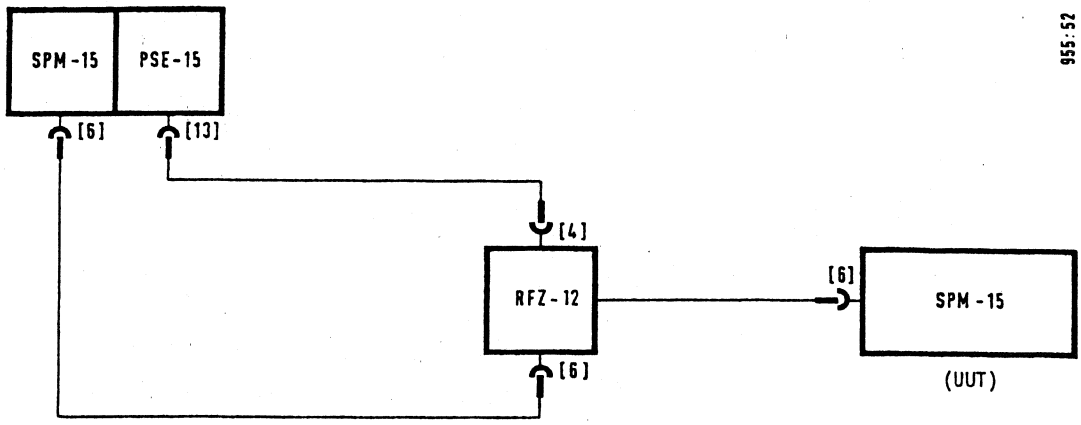

Fig. 8-19 Test set-up (return loss, balanced)

Instrument settings:

SPM-15 (UUT):

Input	[5] : Refer to table for Z_0 value
AUTO CAL	[1] : Off

SPM-15:

Input	[6] : $Z_0 = \infty$
Measurement mode	[9] : Selective/25 Hz

PSE-15:

Send level	[9], [8] : 0 dB

RFZ-12:

Z_0 value	[3] : Refer to table
Mode	[7] : Balanced

With the input on the RFZ-12 open ($|r| = 1$), carry out a reference measurement at f = 10 kHz and store the level as the reference value using the "ABS -> REF" key [2]. Repeat the reference measurement for every new Z_0 value set. Connect the RFZ-12 to the SPM-15 (unit under test). Tune the SPM-15 (measuring instrument) to the test frequency and perform an "ABS-REF" measurement.

Z_o value	Test frequency	Specified error limit (e)	Error of test set-up (m)
124 Ω	100 kHz	≥ 40 dB	+1.9/-1.6 dB
150 Ω			
600 Ω	10 kHz	≥ 50 dB	+4.5/-2.9 dB

Fig. 8-20 Table for verifying the return loss (balanced)

8.8.3 SIGNAL BALANCE RATIO

Measuring instruments required:

Level meter and Level generator	SPM-15 with PSE-15	W&G
Signal balance ratio measuring attachment	SDZ-12	W&G

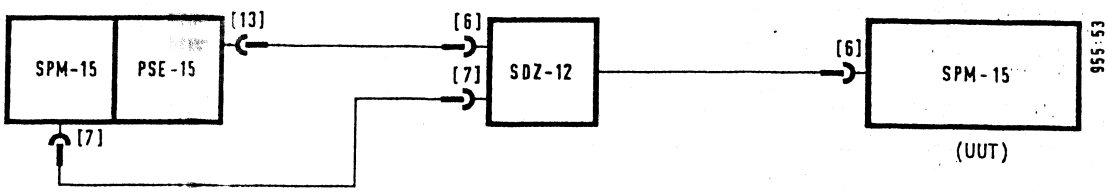

Fig. 8-21 Test set-up (signal balance ratio)

Instrument settings:

SPM-15 (UUT):

Input	[5] : Refer to table for Z_o value
Measurement mode	[9] : Selective/1.74 kHz
Frequency	[10] : Refer to table

PSE-15:

Send level	[9], [8] : 0 dB

SPM-15:

Input	[5] : $Z_o = \infty$
Measurement mode	[9] : Selective/25 Hz
Frequency	[10] : Refer to table

SDZ-12:

Z_o value	[4] : Refer to table
Unit under test	[2] : Receiver

The signal balance ratio is calculated as the difference between the level displays on the SPM-15 (measuring instrument) and the SPM-15 (unit under test).

Z_0 value	Frequency	Specified error limit (e)	Error of test set-up (m)
124 Ω	1 MHz	≥ 40 dB	+1.9/-1.6 dB
124 Ω*	4.5 MHz	≥ 25 dB (≥ 32 dB)	± 0.6 dB
600 Ω	620 kHz	≥ 40 dB	+6/-3.5 dB

Fig. 8-22 Table for verifying the signal balance ratio

* This characteristic value can only be verified up to 4.5 MHz with the test set-up specified. To ensure compliance with this characteristic value even at 10 MHz, the signal balance ratio should not be less than 32 dB at 4.5 MHz.

8.9 LEVEL ACCURACY, PSE-15

8.9.1 ABSOLUTE ACCURACY, COAXIAL OUTPUT

Carry out the measurement at an ambient temperature of 23 °C ± 3 K.

Measuring instruments required:

Milliwatt power meter	EPM-1	W&G
Test probe, 75 Ω	TK-10	W&G

Instrument settings:

PSE-15:

Frequency	[10] : 12 kHz
Send level	[9], [8] : 0 dBm

EPM-1:

Calibration level	: 0 dBm, R_i = 75 Ω

Operate the EPM-1 with the TK-10 and calibrate before measurement. Subsequently connect the EPM-1 to the PSE-15 [13] and read the display on the EPM-1.

Specified error limit (e): ± 8 mB

Error of test set-up (m): ± 1 mB

8.9.2 ABSOLUTE ACCURACY, BALANCED OUTPUT

Carry out the measurement at an ambient temperature of +23 °C ± 3 K.

Measuring instruments required:

Milliwatt power meter	EPM-1	W&G
Basic balanced test probe	TKS-10	W&G
Test probe adaptor	TKSA-124	W&G
Test probe adaptor	TKSA-150	W&G
Test probe adaptor	TKSA-600	W&G
Calibration adaptor	TKSE-124	W&G
Calibration adaptor	TKSE-150	W&G
Calibration adaptor	TKSE-600	W&G

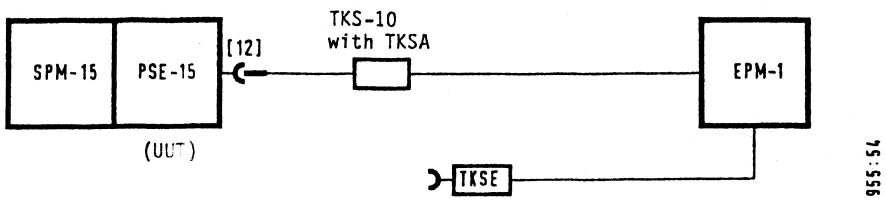

Fig. 8-23 Test set-up (absolute accuracy, balanced)

Instrument settings:

PSE-15 (UUT):

Output	[11] : Refer to table for Z_o value
Frequency	[10] : 12 kHz
Send level	[9], [8] : 0 dBm

EPM-1:

Calibration level	: Refer to table

Before the measurement, calibrate the EPM-1 with the test probe adaptor via the calibration adaptor. Connect the PSE-15 [12] to the EPM-1 and compare the display on the EPM-1 with the specified error limit.

Z_o value	Test probe adaptor	Calibration adaptor	EPM-1	Specified error limit (e)	Error of test set-up (m)
124 Ω	TKSA-124	TKSE-124	0 dB, Z_o = 0	± 16 mB	± 1 mB
150 Ω	TKSA-150	TKSE-150	0 dB, Z_o = 0		
600 Ω	TKSA-600	TKSE-600	0 dB, Z_o = 75 Ω		

Fig. 8-24 Table for verifying the absolute accuracy (balanced)

8.9.3 DIVIDER ERROR

Measuring instruments required:

Level meter	SPM-15	W&G
Attenuation set	D 2053	Siemens

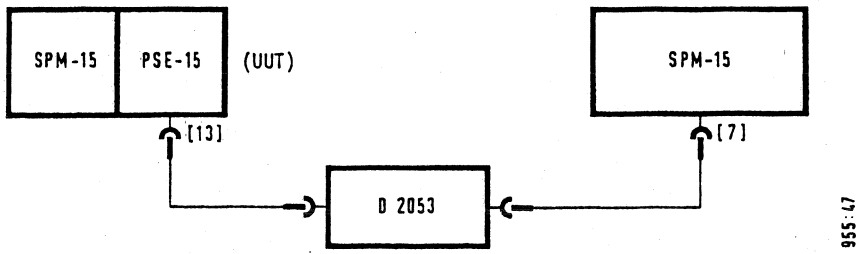

Fig. 8-25 Test set-up (divider test)

Instrument settings:

PSE-15 (UUT):

Send level	[9], [8] : 0 dB
Frequency	[10] : 10 kHz

SPM-15:

Measurement mode	[9] : Selective/25 Hz
Frequency	[10] : 10 kHz

D 2053:

Attenuation	: 60 dB

Store the level on the SPM-15 as the reference value using the "ABS -> REF" key [2]. Set "ABS-REF" measurement [2]. Reduce the send level of the PSE-15 and the attenuation of the D 2053 in steps of 5 dB each. Compare the display on the SPM-15 with the specified error limit at each setting.

Specified error limit (e):	± 10 mB
Error of test set-up (m):	± 2 mB

8.9.4 FREQUENCY RESPONSE, COAXIAL OUTPUT

Measuring instruments required:

Milliwatt power meter	EPM-1	W&G
Test probe	TK-10	W&G

Instrument settings:

PSE-15 (UUT):

Send level	[9], [8] : 0 dBm
Frequency	[10] : 10 kHz
AUTO CAL	[1] : Off

EPM-1:

Measuring range : 0 dBm ± 1 dB

Connect the PSE-15 [13] to the EPM-1. Use the "Calibration" potentiometer to set the display on the EPM-1 to 0 dBm at the reference frequency of f = 10 kHz. Continuously sweep through the frequency range of the PSE-15, comparing the display on the EPM-1 with the table data.

Frequency range	Specified error limit (e)	Error of test set-up (m)
50 ... 200 Hz	0.42 dB	negligible
200 Hz ... 10 MHz	0.12 dB	

Fig. 8-26 Table for verifying the frequency response error (coaxial)

8.9.5 FREQUENCY RESPONSE, BALANCED OUTPUT

Measuring instruments required:

Milliwatt power meter	EPM-1	W&G
Basic balanced test probe	TKS-10	W&G
Test probe adaptor	TKSA-124	W&G
Test probe adaptor	TKSA-150	W&G
Test probe adaptor	TKSA-600	W&G

Instrument settings:

PSE-15 (UUT):

Output [11] : Refer to table for Z_o value

Send level [9], [8] : 0 dBm

EPM-1:

Measuring range : 0 dBm ± 1 dB

Connect the EPM-1 to the PSE-15 [12] via the corresponding test probe adaptor. Use the "Calibration" potentiometer to set the EPM-1 display to 0 dBm at the reference frequency. Continuously sweep through the frequency range of the PSE-15, reading the display on the EPM-1 and comparing it with the table data.

Z_o value	Reference frequency	Frequency range	Test probe adaptor	Specified error limit (e)	Error of test set-up (m)
124 Ω	100 kHz	6 kHz ... 10 MHz	TKSA-124	0.22 dB	negligible
150 Ω			TKSA-150		
600 Ω	10 kHz	50 ... 200 Hz	TKSA-600	0.52 dB	
		200 Hz ... 620 kHz		0.22 dB	

Fig. 8-27 Table for verifying the frequency response error (balanced)

8.10 SPECTRAL PURITY

Measuring instruments required:

Level meter	SPM-15	W&G

Instrument settings:

PSE-15 (UUT):

Send level	[9], [8] : 0 dB

SPM-15:

Measurement mode	[9] : Selective/25 Hz
Mode	ANLG : 20 dB scale

Connect the PSE-15 [13] to the external SPM-15 [7].
At the basic frequency, set the send level of the PSE-15 in such a way that 0 dB is present at the SPM-15.
Tune the SPM-15 according to the table and compare the display with the table data. The sensitivity increase on the SPM-15 should not exceed 50 dB.

Basic frequency	SPM-15	Specified error limit (e)	Error of test set-up (m)
300 Hz	600 Hz 900 Hz	≥ 40 dB	± 0.3 dB
3 MHz	6 MHz 9 MHz		± 0.2 dB
48 kHz	28 kHz 38 kHz 58 kHz 68 kHz	≥ 50 dB	± 0.15 dB

Fig. 8-28 Table for verifying the spectral purity

8.11 GENERATOR OUTPUTS

8.11.1 RETURN LOSS, COAXIAL OUTPUT

Measuring instruments required:

Level meter and Level generator	SPM-15 with PSE-15	W&G
Return loss measuring attachment	RFZ-12	W&G

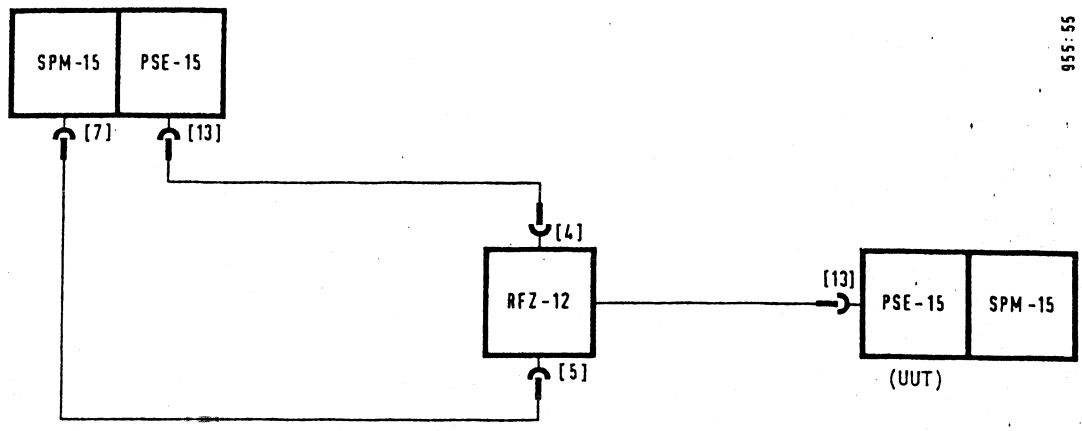

Fig. 8-29 Test set-up (return loss, coaxial)

Instrument settings:

PSE-15 (UUT):

Send level	[9], [8] : Refer to table
Frequency	[10] : 269 kHz

SPM-15:

Input	[5] : $Z_o = \infty$
Measurement mode	[9] : Selective/25 Hz
Frequency	[10] : 10 kHz

PSE-15:

Send level	[9] [8] : 0 dB

RFZ-12:

Z value	[3] : 75 Ω
Mode	[7] : Coaxial

With the input of the RFZ-12 open ($|r| = 1$), carry out a reference measurement and store the level using the "ABS -> REF" key [2]. Connect the RFZ-12 to the PSE-15 (unit under test). Carry out an "ABS-REF" measurement [2] at the UUT send levels stated in the table.

Send level	Specified error limit (e)	Error of test set-up (m)
-20 dB -25 dB -30 dB -50 dB	$\geq$ 50 dB	+4.7/-3 dB

Fig. 8-30 Table for verifying the return loss (coaxial)

Z_0 value	Frequency	Specified error limit (e)	Error of test set-up (m)
124 Ω*	4.5 MHz	≥ 40 dB (≥ 47 dB)	+3.3/-2.4 dB
124 Ω**	10 MHz	≥ 40 dB	+1.3/-1.2 dB
600 Ω	620 kHz		+6/-3.5 dB

Fig. 8-34 Table for verifying the signal balance ratio

* This characteristic value can only be verified at up to 4.5 MHz with the test set-up specified. For compliance with the characteristic value even at 10 MHz, the signal balance ratio should be not less than 47 dB at 4.5 MHz.

** The signal balance ratio is checked using test instrument 3-954 in the factory.

Over-discharging protection

In order to avoid over-discharging of the battery, the comparator (IC 3/2) switches off the converter (IC 1) when the battery voltage drops below the permissible level (10,3 V $\leq U_{Batt}$ $\leq$ 11,3 V).

Charging circuit ("Charge" switch pressed)

The battery pack (if installed) is charged from the high-end voltage via transistor T 2. T 3 limits the maximum permissible effective charging current to 450 mA with the aid of R 7.

9.2.2 INPUT SECTION [955-AF]/[955-AL]

The desired input impedances are implemented in the input section in accordance with the bit configuration set (refer to 4.2.19, input section controller). The low through-connecting impedances required are implemented with the aid of bistable relays. The characteristic of these relays is that they retain their position even when de-energized.

9.2.3 PRE-AMPLIFIER [955-M]

The test signal (balanced and coaxial) passes from the input section [955-AF/AL] via Rel. 1 and Rel. 2 to the calibration change-over switch Rel. 3. This is followed by the switchable 20 dB dividers with Rel. 4 and Rel. 5. Diodes Gl 1 and Gl 2 limit undesired input voltage peaks. The emitter resistance of divider stage T 1 is split, representing a switchable 2 dB test divider with T 3 und T 4.

Amplifier 1 (T 5, T 6, T 7) is of negative-feedback design and has a basic gain of 3 dB. A gain of 13 dB or 23 dB can be activated by means of relays Rel. 6 and Rel. 7 (specified nominal gain 0/10/20 dB). C 23 can be used to align the frequency response of the circuitry (amplifier 1 and amplifier 2). C 25 and C 28 are provided for frequency response corrections at gain = 10 dB and gain = 20 dB.

The downstream amplifier 2 adapts the various dBm levels to the basic gain. For Z = 600 Ω or for dBm measurements, the gain is 3 dB. For

Z = 150 Ω (dBm), the gain is 9 dB (nom. 6.02 dB)
Z = 124 Ω (dBm), the gain is 9.85 dB (nom. 6,85 dB)
Z = 75 Ω (dBm), the gain is 12 dB (nom. 9,03 dB).

The divider stages with T 13/14 and T 15/16 are required for coupling out the test and calibration signal into the wideband and selective branch. Potentiometer P 6 can be used to vary the amplitude of the wideband level by approx. $\pm$ 5 dB.

A superimposed control loop has been implemented with IC 1 for controlling the operating point of the first transistor, in order to allow DC coupling of the entire amplifier chain (lowest test frequency 50 Hz!). The DC operating point can be set with pot. P 5. For troubleshooting purposes, the negative feedback circuit of amplifiers 1 and 2 can be disconnected with switches S 1 and S 2. It is then easy to measure the operating points of the various stages (make DC setting with P 5/voltage values different to those with closed switches!).

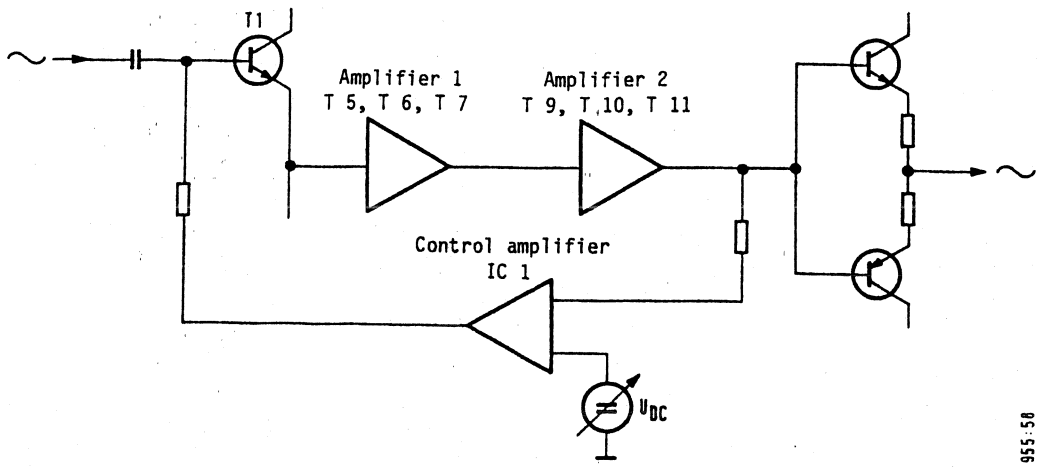

Fig. 9-1 Controller operating mode
(With switches S 1 and S 2 open: open-loop gain of amplifier 1 and amplifier 2 approx. 10 dB / $V_{nom.}$ 0 dB in each case)

Gain G_{WB} [dB]	Code Gate 84H D7 DØ	Code Gate 85H D7 DØ
+20	XX0001XX	Address 85H has no effect on gain
+10	XX0010XX	
0	XX0000XX	
-10	XX1010XX	
-20	XX1000XX	
-30	XX1110XX	
-40	XX1100XX	
2 dB divider off	XXXXXXXX	XXXX1XXX
2 dB divider on	XXXXXXXX	XXXX0XXX
Relay TRI-STATE	XXXXXXXX	XXX1XXXX
Relay ON	XXXXXXXX	XXX0XXXX
g = 6.85 dB	XXXXXXXX	XXXXX1XX
g = 6.02 dB	XXXXXXX1	XXXXXXXX
g = 9.03 dB	XXXXXX1X	XXXXXXXX

Fig. 9-2 Bit configuration for pre-amplifier

9.2.4 10 MHz LOW-PASS FILTER [955-N/0]

The 10 MHz low-pass filter is an 8th order computer-approximated filter. The filter has been implemented in two sections in order to achieve high attenuation values and low mutual coupling.

9.2.5 MIXER 1 [955-R]

The input signal (50 Hz ... 10 MHz) is converted to the first IF of 40 MHz here with the aid of the carrier signal (40 MHz ... 50 MHz).

Input amplifier

A divider stage is necessary to prevent reactive effects between mixer and low-pass filter. This stage takes the form of T 1 und T 2, which operate as a complementary emitter follower.

Mixer

The limitation and distribution in carrier limiter 1 (refer to 9.2.6) create square-wave signals with a rise time of 1 ns at the collectors. Only with such short switching times can the required harmonic ratios be achieved.

The four Schottky diodes selected for the same forward voltage represent a conventional ring mixer. However, it is not supplied from a balance-to-unbalance transformer, but from two current sources T 3, T 4 terminated with resistors, which are clocked with the carrier voltage. Resistors R 11, R 15 thus form part of the output impedance of the signal source. T 6 terminates the mixer with low impedance.

Output amplifier

The output amplifiers T 6/T 7 produce a wideband low-value terminating impedance for the mixer, as well as a correct input impedance for the downstream filter, without this having reactive effects on the mixer. The signal supplied by the mixer is passed via the base stage (T 6) and the emitter follower (T 7) to a transformer, from where it is passed to the crystal band-pass filter as the first IF of 40 MHz (refer to 4.2.7). The LC combination (C 9, C 10, L 3) is used for bandwidth limitation on noisy signals.

9.2.6 CARRIER LIMITER [955-S]

The carrier signal supplied by the OD-15 (BN 2011) is conditioned in the carrier limiter in two limiter stages (differential amplifiers) in such a way as to minimize the deviations of the carrier signal from the mark-to-space ratio of 1 : 1. Only in this way can the required distortion values be obtained.

9.2.7 40 MHz CRYSTAL BAND-PASS FILTER (7) [955-T], [955-U], [955-V], [955-W]

The 40 MHz IF signal is passed via the 40 MHz band-pass filter to mixer 2 for final conversion. The band-pass filter suppresses the image frequency of the first conversion at 40.02 MHz, as well as higher mixing products up to the GHz range.

9.2.8 MIXER 2 (8) [955-AC], [955-AD]

Mixer 2 is fed with a constant carrier frequency of 40.01 MHz locked onto the standard frequency of the synthesizer and converts the first IF of 40 MHz to the second IF of 10 kHz.

Input amplifier

In the 40 MHz frequency range, the input for the crystal band-pass filter represents an impedance of 400 Ω. An amplifier stage with negative feedback (T 1, T 2) is used in order to guarantee the low tolerances of the crystal band-pass filter for the input impedance. This stage supplies the signal via O 2 to the two transistor mixers (IC 2/2 and IC 2/1) connected in parallel at low impedance and, consequently, largely free of reactive effects.

Transistor mixer

The transistor mixer is clocked by the carrier frequency of 40.01 MHz. Current control is achieved by the 40 MHz signal. O 1 is used for forced balancing, this improving the k_2 characteristics of the mixer. C 21 and C 23 suppress the upper sideband of the carrier.

The mixer has a balanced output in order to fulfil the k_2 distortion requirements imposed on the mixer. R 38 and R 40 form the 2 kΩ source impedance for the 10 kHz band-pass filter downstream in the signal path.

Carrier limiter

The carrier limiter consists of two differential amplifiers connected in series (IC 1/1, IC 1/2). It guarantees a fast edge response in the mixer transistors, as well as good intrinsic harmonic ratio separation.

9.2.9 10 kHz BAND-PASS FILTER (9), [955-AB]

The frequency-selective properties of the SPM-15 essentially depend on the selectivity of this band-pass filter Δf = 3.1 kHz (O 1 to C 18). The effective noise bandwidth is taken as meaning Δf = 3.1 kHz. In view of the steep pass/stop band transition, this also applies for the 3 dB bandwidth. The secondary bandwidth Δf = 1.74 kHz (L 12, L 13) ensures correct weighting of a noise level without increasing the selectivity.

The temperature-dependent amplifier (IC 1), via which the 10 kHz IF signal leaves the assembly, compensates for the mean temperature drift of the total gain of the SPM-15.

9.2.10 CALIBRATING MIXER (10), [955-AE]

The calibrating mixer generates a signal matching the current tuning frequency with the aid of the 40 MHz ... 50 MHz carrier frequency and the 40 MHz signal obtained by quadrupling the 10 MHz standard frequency.

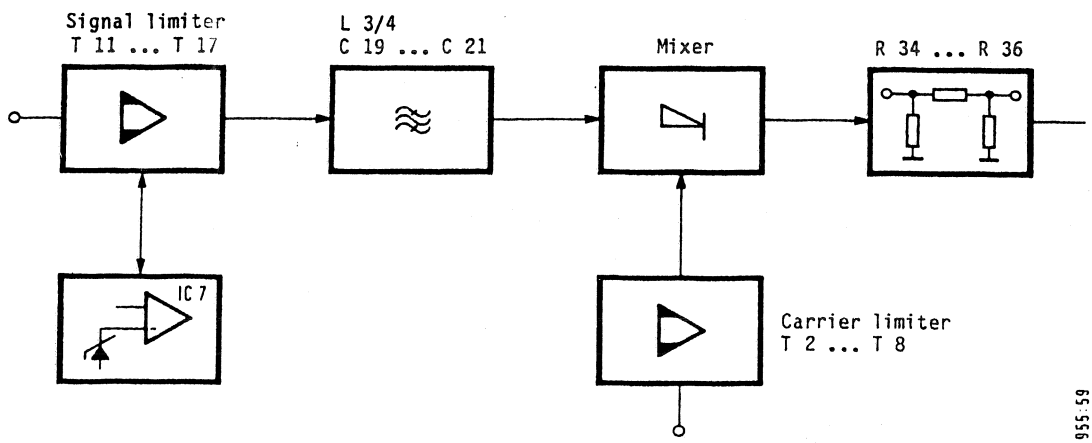

Fig. 9-3 Calibrating mixer for selective operation

The carrier signal is conditioned into a symmetrical square-wave signal with very steep edges in a two-stage carrier limiter (T 2 ... T 8). This signal passes via transformer O 1 to mixer diodes G1 1 ... G1 4. The 40 MHz signal is coupled in via O 2 and converted in the ring mixer with the carrier signal 40.000 ... 50 MHz. The resultant 50 Hz to 10 MHz output signal (lower

sideband) is coupled out to the PSE via C 13 (see below, Signal conditioning with PSE), passes via the attenutator pad R 34 ... R 36 to the output and is then fed into the pre-amplifier as the -40 dB calibrating level.

Signal conditioning (without PSE, S 1 and S 2 closed)

The 40 MHz signal is adjusted to a precise level in the signal conditioner. The 40 MHz signal passes from Pt. 5 via T 17 to a two-stage limiter (T 11 ... T 16). The square-wave signal is coupled out via R 77 and fed to a 40 MHz band-pass filter (L 4/C 21, C 20, L 3/C 19), where the fundamental wave is filtered out and fed to the mixer via D 2.

The level is controlled by amplifier IC 7. It compares the constant voltage from the reference element Gl 5 with the voltage across the resistor combination (R 118, R 119, R 78, P 1). Consequently, a constant voltage is controlled via the resistor combination by the output of the amplifier (IC 7) keeping the current through the limiter (T 11 ... T 13) constant. However, a constant DC current through the limiter also produces a constant AC current and/or a constant AC voltage at R 77. Consequently, the accuracy of the reference element Gl 5 largely determines the accuracy of the calibrating lebel. P 1 is used for absolute alignment, R 119 compensating for the temperature drift.

Signal conditioning (with PSE, S 1 open)

The above description also applies for operation with PSE, except that in this case the calibrating level is varied (except during calibration) by superimposing a DC voltage on the reference voltage (refer to PSE 9.26). This allows variation of the calibrating level by -6.5 dB (-10.5 dB from Series E onwards) and also fine adjustment of the PSE as a result.

Output coupling stage (T 9, T 10)

The output coupling stage is used for coupling out the calibrating level for the PSE power stage without reactive effects.

Calibrating level for wideband

The clock of approx. ca. 10 kHz generated in IC 1 chops the constant DC voltage from the reference element Gl 7 with the aid of switches IC 2/1, IC 2/2. The signal is reduced via the divider chain R 84, P 2, R 85 in such a way that is coupled into the pre-amplifier at a nominal level of -40 dB (effective) via Rel. 1 (for calibration). P 2 is used for fine adjustment of the level.

9.2.11 DIVIDER STAGE (11) [955-AA]

The purpose of the divider stage is to pass the control signal of the OD-15 (carrier) to the calibrating mixer and the control output 14 Bu 1 without reactive effects.

9.2.12 40.010 MHz GENERATION (12) [955-X], [955-Y], [955-Z]

A frequency of 40.010 MHz is required for converting the first IF of 40 MHz to the second IF of 10 kHz. The 40.010 MHz generator is designed as a phase-locked loop (PLL). Stability reasons prevent the use of a variable-frequency crystal oscillator, since filters with a bandwidth of down to 25 Hz are used at the 10 MHz IF level. The reference frequency used is the standard frequency of 10 MHz, as well as 10 kHz, from the OD-15.
The voltage-controlled crystal oscillator VCO generates a frequency of 13.3367 MHz. The desired carrier signal of 40.010 MHz is obtained by tripling this frequency.
In order to avoid complex scanning at 40 MHz, phase comparison takes place at f = 10 kHz. The quadrupled reference frequency and the 40.010 MHz signal are passed to a ring mixer for this

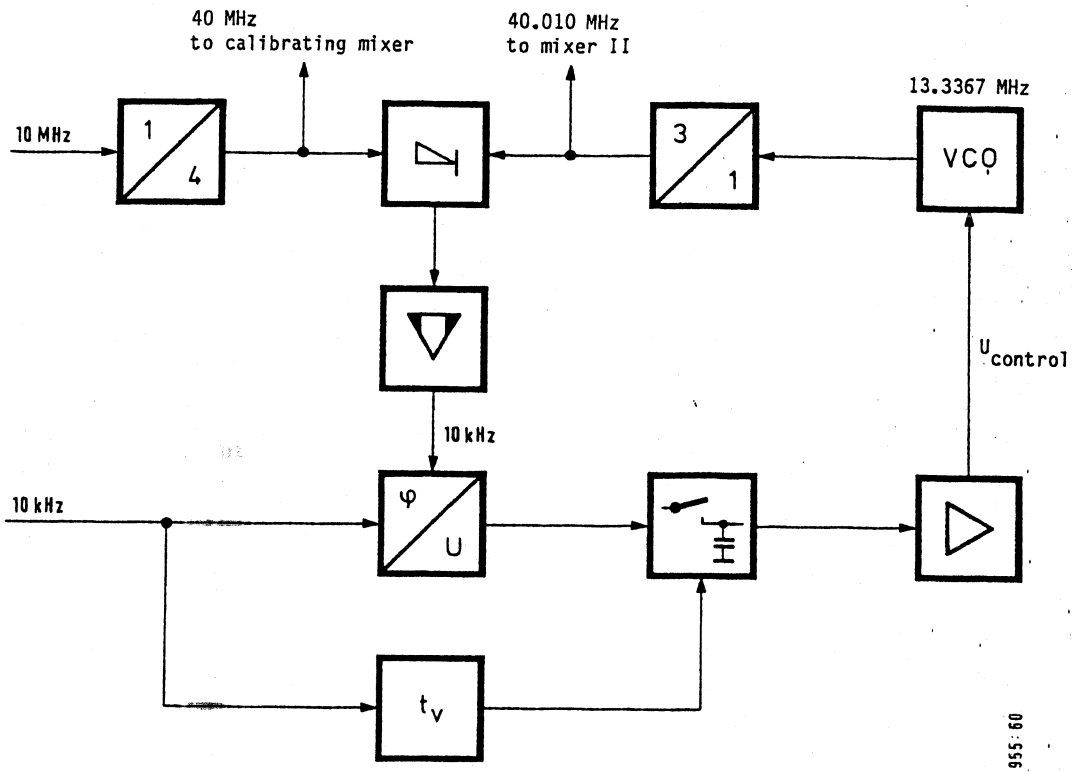

Fig. 9-4 PLL operating mode

purpose. The resultant mixing product of $f_m = 3 \times f_{VCO} - 4 \times f_{ref} = 10$ kHz is shaped into a square wave by a comparator.

The phase comparator stage boosts the comparator signal as well as the 10 kHz derived from the reference frequency. At the output of this stage is a phase-proportional voltage which, however, has a major 10 kHz interference component. In order to supply the DC amplifier with a control voltage largely free of interference voltage, the phase comparator is followed by an interference suppressor stage with buffer memory (IC 7.3/7.4, IC 6). The downstream DC amplifier (IC 9) matches the control voltage obtained to the VCO.

10 MHz input, quadrupler [955-Z]

The 10 MHz reference signal passes from the synthesizer (OD-15) to amplifier stages IC 1/1 and IC 1/2, where the signal is boosted to such an extent that the harmonic generator stage IC/3 can be supplied. The harmonic generator stage operates on the band-pass filter C 12/L 2, C 14, C 15/L 3, where the 4th harmonic of 10 MHz is selected out. The signal passes from the output coupling stage IC 1/4 to the calibrating mixer and, in attenuated form, via R 34 to mixer IC 4.

40.010 MHz VCO [955-X]

Board [955-X] accommodates the control amplifier IC 9, the voltage-controlled crystal oscillator T 17, a harmonic generator stage T 16 with band-pass filter, as well as two ouput coupling stages T 14, T 15. The 40.010 MHz carrier frequency is generated by tripling the oscillator frequency of 13.3367 MHz. A crystal oscillating at the fundamental is used in the oscillator circuit, since the dynamic capacity of a crystal operating in harmonic mode would be too small for the required lock-in range. The frequency-determining circuit of the oscillator consists of C 59, 60, 63, 64, 67, Gl 11 and Q 1. C 64 is used to compensate for the capacitor and crystal tolerances. Tuning diode Gl 11 corrects the oscillating frequency as a function of the control

voltage. The oscillator signal passes from emitter T 17 via limiter diodes G1 9, 10 to the harmonic generator stage T 16. The band-pass filter with L 6/C 54 and L 5/C 51 selects out the 3rd harmonic of 13.3367 MHz. The 40.010 MHz signal passes to mixer II via collector stage T 15. T 14 supplies the signal to the control circuit.

40.01 MHz PLL [955-Y]

This board accommodates the auxiliary mixer IC 4, the comparator IC 5, the phase comparator IC 7 and the interference suppressor IC 6,7.

The signal for the control circuit passes from the VCO via divider stages T 10, T 11 to ring mixer IC 4. In order to generate the minimum possible interference voltage within the instrument (the first IF corresponds to the four-fold reference frequency of 10 MHz), the VCO frequency is used as carrier and the 40 MHz reference frequency as signal. The mixing product, which is exactly 10 kHz in the locked state, is converted into square waves by comparator IC 5. The 10 kHz signal and the differential signal from the comparator feed the phase comparator, which takes the form of two analog switches IC 7.1/7.2. The downstream interference suppressor with buffer memory IC 7.3/7.4, which is essentially a sampling filter, suppresses the 10 kHz spurious signal in the control voltage.

The control signal delay t_{v1}/t_{v2}, required to prevent a level change from being passed on during a switching phase of the phase comparator, is generated by flip-flop IC 6.1. The holding times t_{v1} and t_{v2} for the buffer memory are supplied by the second flip-flop IC 6.2.

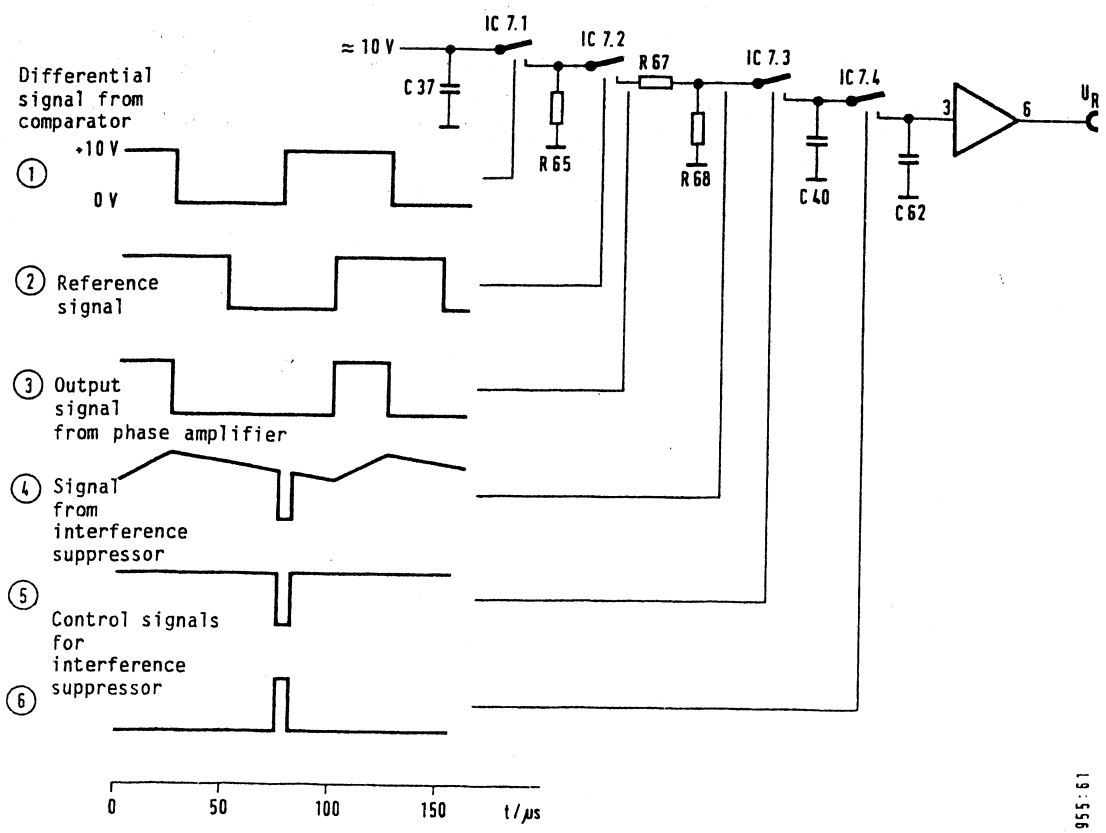

Fig. 9-5 Signals in the phase comparator and interference suppressor with PLL locked

9.2.13 RF CONTROLLER [955-E]

The RF controller contains the latches for storing the data for the pre-amplifier and the 10 kHz band-pass filter (the data are passed to the band-pass filter via the pre-amplifier), as well as the power elements (IC 2, IC 3) for activating the bistable relays in the pre-amplifier.

The relays are triggered via D 4 of Adr. 85H, where D 4 = H => relays TRI-STATE, D4 = L => relays assume new positions:

	ADR 84H	ADR 85H
ED0	= H => v = 6.02 dB on	= H => 1.74 kHz on
ED1	= H => v = 9.03 dB on	= H => 3.1 kHz on
ED2	= H => v = 20 dB on	= H => v = 6.85 dB on
ED3	= H => v = 10 dB on	= L! => v = 2 dB on
ED4	= H => a" = 20 dB on	see above
ED5	= H => a' = 20 dB on	X
ED6	= H => calibration	X
ED7	= H => symmetrical	X

Fig. 9-6 Bit assignment on the RF controller

The combinations set for the individual gains are listed in Section 9.2.3. The following additional gains are activated for dBm measurements:

Z_0	Activated gains
75 Ω	g = 9.03 dB
124 Ω	g = 6.85 dB
150 Ω	g = 6.85 dB + g = 6.02 dB

Fig. 9-7 Gains activated for dBm setting

9.2.14 INTERFACE [955-AM1]

The instrument bus lines are re-coded on the interface for the RF controller jack and the external control jack.

9.2.15 IF EVALUATION CIRCUIT (15) [955-J]

IF amplifier (15, Page 1)

The IF amplifier represents a multiplying DAC adjustable in 10 dB increments, whose nominal gain can be varied between -13 dB and +67 dB. (A gain of -13 dB is referred to as 0 dB IF gain here and in all descriptions, since a gain of approx. 13 dB is made between mixer 1 and the IF amplifier.) P 1 is used for gain adjustment.

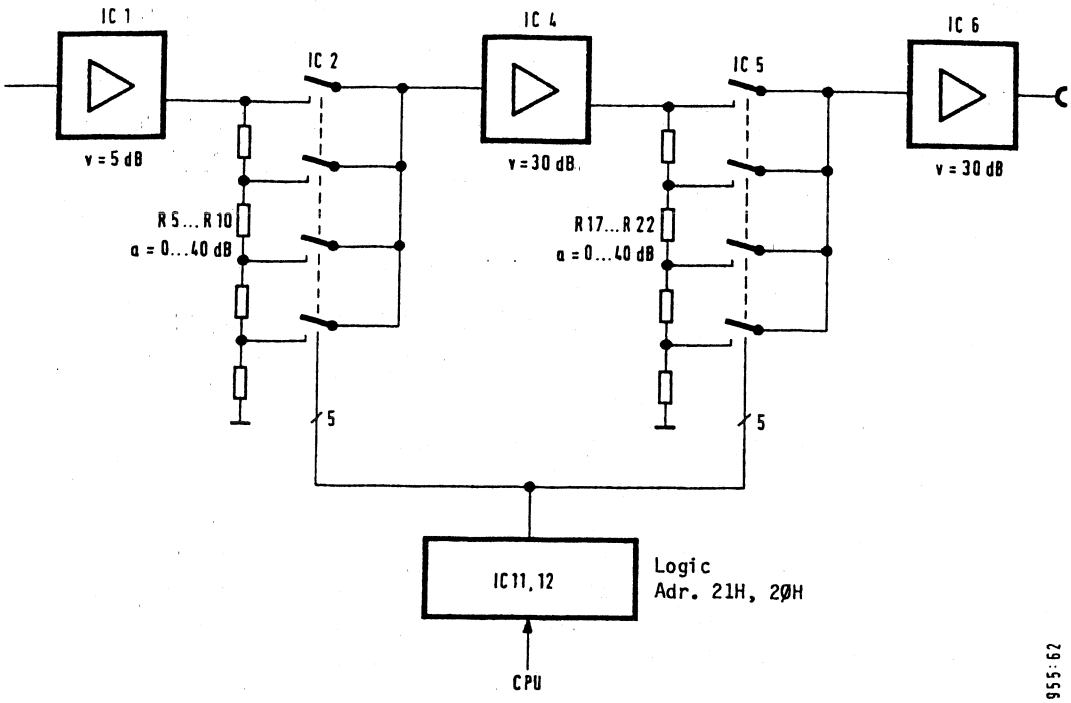

Fig. 9-8 Principle of the IF selective amplifier

V_{IF}/dB	0	10	20	30	40	50	60	70	80
Gain (dB)	-13	-3	+7	+17	+27	+37	+47	+57	+67
Data									
ED0	H	L	L	L	L	L	L	L	L
ED1	L	H	L	L	L	L	L	L	L
ED2	L	L	H	L	L	L	L	L	L
ED3	L	L	L	H	L	L	L	L	L
ED4	L	L	L	L	H	H	H	H	H
ED5	H	H	H	H	H	L	L	L	L
ED6	L	L	L	L	L	H	L	L	L
ED7	L	L	L	L	L	L	H	L	L

Fig. 9-9 Bit configuration for ADR-2ØH

V_{IF}/dB	0	10	20	30	40	50	60	70	80
Approximate gain (dB)	-13	-3	+7	+17	+27	+37	+47	+57	+67
Data									
ED0	L	L	L	L	L	L	L	H	L
ED1	L	L	L	L	L	L	L	L	H
ED2	X	X	X	X	X	X	X	X	X
ED3	X	X	X	X	X	X	X	X	X
ED4	X	X	X	X	X	X	X	X	X
ED5	X	X	X	X	X	X	X	X	X
ED6	X	X	X	X	X	X	X	X	X
ED7	X	X	X	X	X	X	X	X	X

Fig. 9-10 Bit configuration for ADR-21H

IF WB amplifier, IF output (15, Page 2)

In order to allow "selective" (IF = 10 kHz, switch T 101 "on") or "wideband" (relay contact Rel 102/1-4 closed) rectification of the signals coming from the instrument, these signals are boosted with the aid of the WB operational amplifier IC 105.

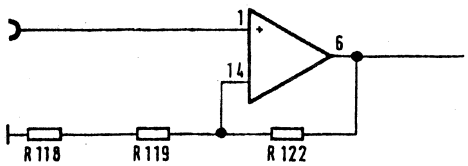

Fig. 9-11 Principle of the IF wideband amplifier

The signal thus amplified feeds the rectifier via divider stage T 109, on the one hand, and is passed, on the other hand, via an output coupling stage (T 105) with 0 dBm/75 Ω* to the IF output jack Bu 104 [35] on the rear of the instrument. This output is wideband signal in "wideband" mode. C 120 is used for DC decoupling.

* (for 0 dB meter reading/20 dB scale)

Rectifier (15, Page 2)

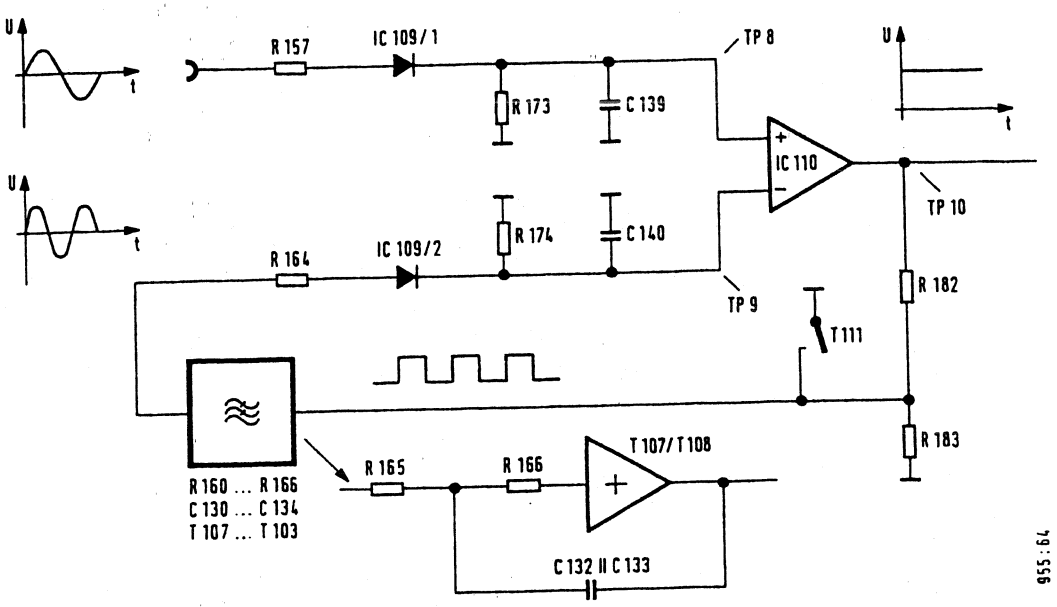

Fig. 9-12 Principle of the rectifier

An amplifying wideband rectifier is built up around IC 110. The incoming signal is quasi-rms weighted. Feeding back the chopped DC output voltage and comparing the DC voltage of two identically structured networks largely eliminates the temperature drift of the actual rectifier diodes (IC 109/Pt. 1-2), also improving the linearity.

If a signal is now applied, it passes from the IF WB amplifier and the decoupling stage (T 109) to the RC diode combination (IC 109/1-2, R 173, C 139). TP 6 is charged up to the rms value of the AC voltage signal, TP 10 being charged accordingly to a proportional DC voltage value. T 111 chops the now divided DC voltage at a clock frequency of 32.6 kHz and feeds back the square-wave signal via a low-pass filter to an identically structured second rectifier (IC 109/5-6, R 174, C 140).

The output voltage of IC 110 is then adjusted until the same DC voltages are present at TP 8 and TP 9.

Signal detector

If the AC voltage amplitude at IC 105/8 corresponding to -15 dB on the meter is exceeded, flip-flop IC 107 is triggered via comparator IC 106/1 and amplifier IC 106/2 and the signal detector LED on the meter illuminated via the signal detector line.

DC amplifier (15, Page 3)

The rectified voltage is amplified in IC 201 in such a way that 5.7 V is present at TP 12 for a 0 dB input signal (+20 dB/15 TP 6). IC 207/210 makes up a digitally adjustable amplifier whose gain can be adjusted in mB increments between -1.25 and +1.25 dB.

IC 202 is a switchable amplifier stage with a nominal gain of 0/16 dB. The amplifier stage consisting of IC 211/212 is used to set 0.1 and 1 dB increments in the range between 0 and 11 dB gain.

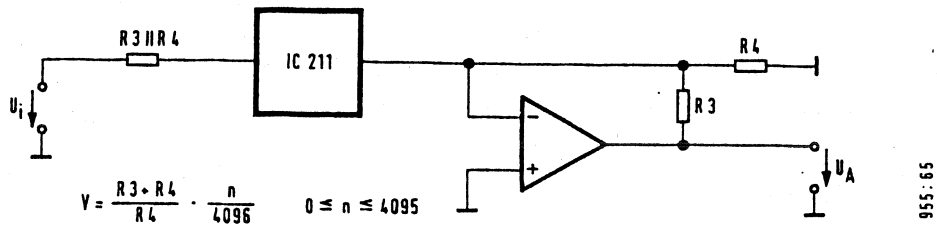

Fig. 9-13 Principle of the 0.1 dB increment amplifier

Logarithmizer

The logarithmizer (IC 225/226) is used to linearize the voltage for the linear scale (± 1.25 dB) and/or to produce the voltage for the ADC.

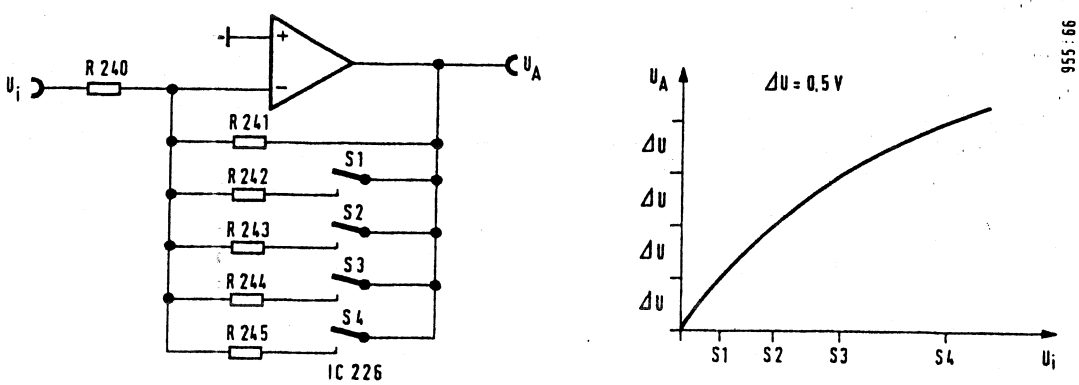

Fig. 9-14 Principle of the logarithmizer

The input voltage is linearized by switches S1 ... S4 being switched on with increasing input voltage (=> increasing output voltage), this causing the output voltage to follow the relationship U_A [V] = U_i [dB] due to flattening of the straight line. The following applies: ΔU_A of 0.1 V ≙ ΔU_i of 0.1 dB.

Shift/expansion amplifier

In order to condition the voltage for 0 dB (3.97 V/15 TP 15) and make it usable for the expanded display, the voltage is expanded by a factor of 4 in IC 230 (V = R 264/R 261 || R 262) and shifted in such a way that 2.5 V are present at the output of IC 230 (Pin 6) for a 0 dB meter reading.

The voltage for the ADC is derived via the voltage divider R 266, R 263. (0 V is present at 15 TP 17 for 0 dB, $\Delta U = \pm 0.1$ V for ± 0.1 dB.) Depending on the desired mode, the DC voltage is applied to IC 234 via the analog switches in IC 234.

4-bit ADC:

Mode	IC 233/1	IC 233/2	IC 233/3	IC 233/4
Unexpanded	off	on	X	X
Expanded	on	off	X	X
DGTL	X	X	off	on
Instrument off	X	X	off	on
Instrument on	X	X	on	off

During Autoset, the ADC built up around IC 208 provides the CPU with the information on the direction in which the dividers are to be adjusted.

Level on instrument	Voltage at 15 TP 15	Level at IC 209			
		Pin 10	Pin 6	Pin 4	Pin 2
x < 20	x < 0,397 V	L	L	L	L
-20 < x < -10	0.397 V < x < 1.25 V	L	L	L	H
-10 < x < -1	1.25 V < x < 3.54 V	L	L	H	H
-1 < x < +1	3.54 V < x < 4.45 V	L	H	H	H
x > +1	> 4.45 V	H	H	H	H

Demodulator

The function of the demodulator is to convert a CF speech channel in single-sideband position, to the suppressed carrier of which the SPM-15 is tuned, from the 10 kHz IF level to the LF-level. Demodulation is possible both from the inverted position (lower sideband) and from the upright position (upper sideband). With an IF level of 0 dBm/75 Ω (= 0 dB meter reading), the signal is available at the demodulator output (Bu 401) with 0 dB at $Z_o = Z_{out} = 600$ Ω. The signal can be monitored via the built-in loudspeaker.

Mixer section

The IF level is converted by a balanced switching mixer. IC 403/1 amplifies the IF signal by approx. 13.5 dB (level boosting, mixer attenuation compensation). The signal phase is rotated through 180° at switch IC 402/2, but the signal at switch IC 404/1 is in proper phase. The outputs of IC 405/1 alternately close the switches in time with the sub-carrier clock. The mixing products of the mixer are present at C 407. P 401 is used to adjust the total gain. The offset of IC 403/2 is adapted to that of IC 403/1 in order to compensate for the residual carrier, which primarily results from the offset differences between IC 403/1 and IC 403/2.

Low-pass filter, 3.4 kHz

The frequencies resulting from the difference between the two input signals of the mixer are used as the wanted signal. In order to ensure adequate attenuation of all other mixing products, as well as the residual signal and residual carrier, the attenuation requirements for the low-pass filter are 20 dB at 8 kHz and 50 dB at 12 kHz. Since a CF channel has a bandwidth of 0.3 - 3.4 kHz, a pass band of 3.4 kHz is required for the low-pass filter. These requirements are fulfilled by the 5th order Chebyshev low-pass filter (IC 407).

Amplifier stage

An additional 16 dB gain is required in IC 408/1 in order to obtain a level of 0 dB at 0 dBm IF level (Bu 103) at the test output with $Z_o = Z_{out} = 600\ \Omega$.

Monitoring amplifier

The volume can be adjusted with potentiometer P 403. Transistors T 403 and T 404 are connected downstream of the operational amplifier IC 17 as power output stage. The gain-determining negative feedback (R 437, R 439) is tapped at the output of the transistor stage. The output stage transistors are operated on +5 V (maximum output power at 8 Ω approx. 0.4 W) in order to minimize the power loss. An AC voltage > 5 V_{pp} is required at the output of IC 408/2 in order to be able to drive the output stage transistors to full power. IC 408/2 is supplied with ± 12 V for this reason.

Carrier frequency generation

Carrier frequencies of 8.15 kHz for the upright position and 11.85 kHz for the inverted position are required for converting 10 kHz (IF centre frequency) to 1.85 kHz. The frequencies required are generated by dividing the frequencies of higher-frequency crystal oscillators. This produces a very good k_2 harmonic ratio, allowing better suppression of undesired mixing products.

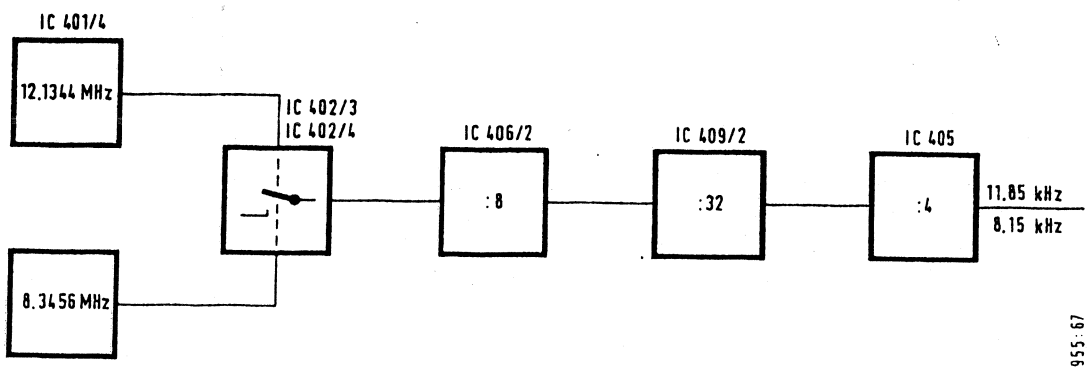

Fig. 9-15 Principle of frequency generation for the demodulator

Sections 9.2.16 to 9.2.18 intentionally omitted.

9.2.19 DISPLAY LOGIC

Input section controller

The input section controller switches the bistable relays in the input section. The data stored at address 41H (refer to Fig. 9-16 for bit configuration) are passed via the power drivers IC 51/52 to the relays in the input section. The relays are activated by IC 51/52 switching to the active state (address 40H, ED4 at LOW). If the relays are not activated, IC 51/52 are set to TRI-STATE.

Principle:

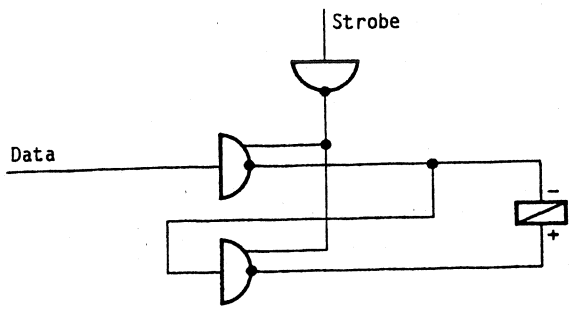

955:68

R_i [Ω]	ADR 41H							
	ED0	ED1	ED2	ED3	ED4	ED5	ED6	ED7
75	L	L	L	L	L	H	X	X
124	H	L	L	L	H	L	X	X
150	H	L	L	L	L	H	X	X
600	L	L	H	H	L	L	X	X
75 ∞	L	L	L	L	L	L	X	X
124 ∞	L	L	L	L	H	L	X	X
150 ∞	L	L	L	L	H	L	X	X
600 ∞	L	L	L	H	L	L	X	X

Fig. 9-16 Bit configuration for input section

Frequency offset (voltage/frequency converter)

If the frequency offset is not operated, the outputs of the two comparators (IC 92/Pin 1, 7) are at LOW. C 25 is charged via R 65 when the frequency switch is operated. If a value now exceeds or drops below one of the comparator thresholds, the corresponding output switches to HIGH and triggers the related flip-flop (IC 80). The flip-flop is thus triggered via IC 56, triggering a frequency interrupt. At the same time, the frequency counter is started via IC 57. The UP-DOWN information is obtained via IC 80/1. The counter is clocked with the frequency obtained in IC 60. The counter reading can be read out by activating addresses 42H, 43H.

ADC

The DC voltage supplied by the IF evaluation circuit is converted into a 3 1/2-digit BCD value in the ADC (IC 10), although only 2 1/2 digits are evaluated. The data are output in serial form and stored in IC 70/IC 71 after level conversion by IC 75, whereupon they can be loaded in parallel by the computer via addresses 40H/41H.

RAM controller

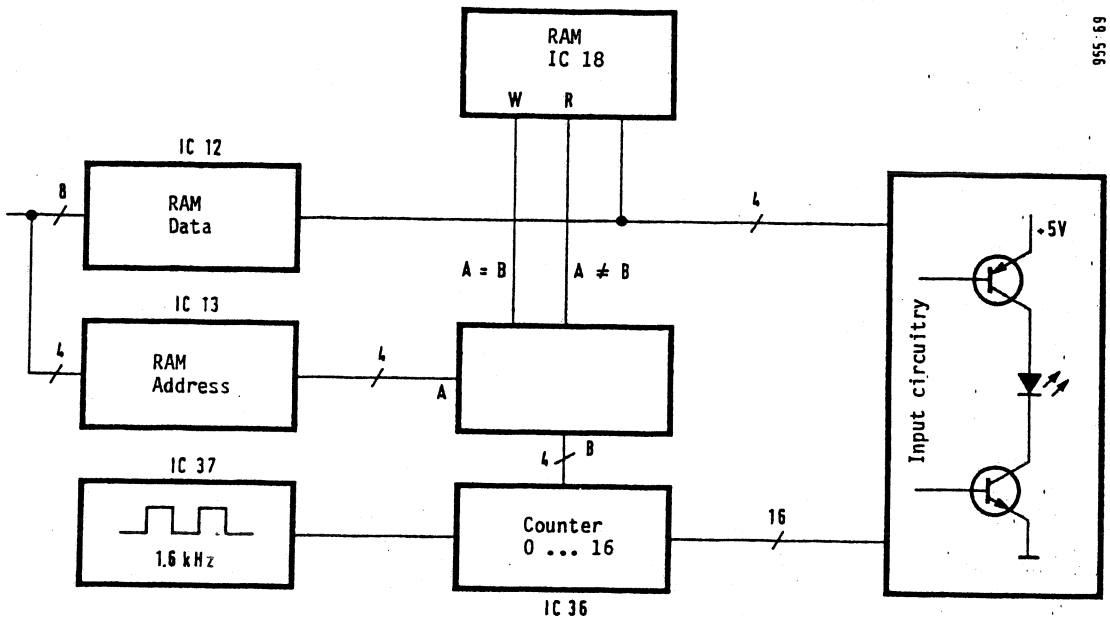

Fig. 9-17 Principle of the RAM controller

The computer stores the data of the LCD-digits and LEDs to be displayed in the RAM. The RAM controller is responsible for the cyclic reading of the data from the RAM and, when necessary, writing new data into the RAM. The clock generated in IC 37 controls counter IC 36. The latter outputs a HEX code between Ø ... ØFH in cyclic form, at the same time controlling the digit drivers on the input circuitry (20 IC 15), the equality circuit IC 17/19 and the address decoder of the RAM. If only the RAM address stored in ADR 45H (IC 13) is identical with that currently output by the counter, the RAM is switched from read to write (IC 18, Pin 17 goes to LOW, Pin 18 to HIGH) via the chain IC 19/16/25, the outputs of IC 12 simultaneously switching from TRI-STATE to active, whereupon new data are written into the RAM. A further precondition for triggering the above operation is that FF IC 16/1 has previously been set by the computer via the DAV (DATA Valid) signal.

Offsetting the level display

Whereas the frequency display and LED activation are affected directly in the data stored in the RAM, the level is offset against the ADC value if output IC 9, Pin 5 "DGTL" is at HIGH. For this purpose, the data DAØ ... DA3, which are intended for the level display, are no longer supplied to the input circuitry via IC 21, but offset in accordance with the following simplified circuit diagram and passed to the input circuitry via IC 33:

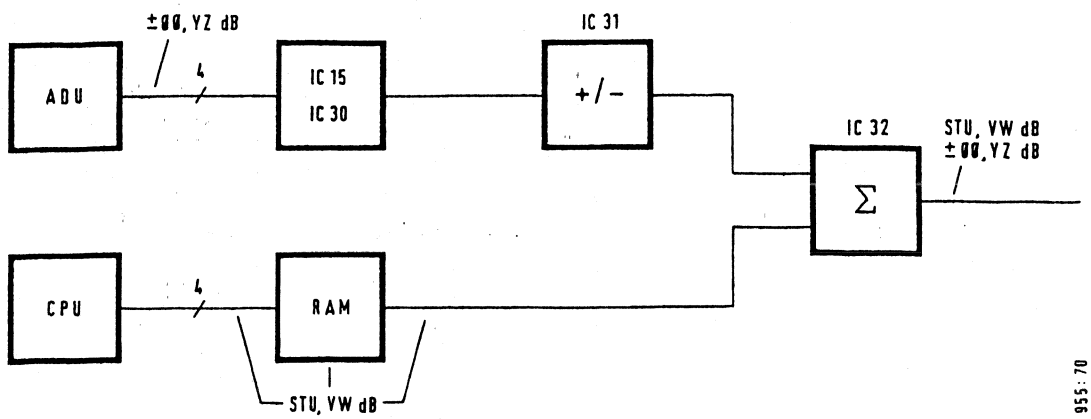

Fig. 9-18 Principle of offsetting for ADC and computer value for "DGTL" = HIGH

The decision as to +/- ADC value is made by the MSB (most significant bit of the ADC) and the bit configuration of D4 ... D7 in IC 9. During normal operation, IC 9 Pin 5 is at LOW, since the entire display value is calculated by the software even in DGTL mode.

9.2.20 INPUT CIRCUITRY (20) [955-B]

Keyboard logic

The keyboard logic is a W&G standard circuit. The key columns are enabled by applying LOW levels on the data line in address 42H. If a key is pressed, the output of IC 23/1 goes to L and triggers the key debouncer (IC 21/22). Once the key stops bouncing, the "key" signalling line goes to H and line RST 6.5 goes to HIGH via the OR circuit (IC 12), thus triggering an interrupt on the CPU (circuit diagram 21). Gl 1 is necessary, since RST 6.5 interrupts are also possible from the IEC bus interface.

Level switch and logic

The level switch consists of three controlled opto-couplers (T 100 ... T 102, Gl 100 ... Gl 102). If one of the phototransistors receives a pulse, the comparators are triggered (IC 100), two opto-couplers being connected through in each case.

If the rotary switch is operated, the "level switch" line goes to HIGH and triggers an interrupt, this interrupt being stored in IC 101/ED3 (ADR 46H) at the same time. The CPU initiates the corresponding responses (level adjustments) on the basis of the changed bit combination (IC 101, ED0 ... ED3).

Power section for LED display (also refer to 9.2.19: RAM controller)

The data (DAØ ... DA3) supplied by the display logic for the seven-segment displays (IC 70 ... IC 76, IC 80 ... IC 84) are re-coded into 7 segment code data for the individual digits in the seven-segment decoder (IC 60). They pass via IC 61 to the controllable constant current sources (IC 53 ... IC 55). These control the segments of the corresponding displays via the segment power drivers (T 1 ... T 9). The corresponding displays (digits) are selected cyclically via the address decoder IC 15 (controlled by 19 IC 36) and drivers IC 50, 65, 66.
The LEDs are activated in the same way, but the data pass from the display logic (DAØ ... DA7) directly via IC 63 to the controllable constant current sources.

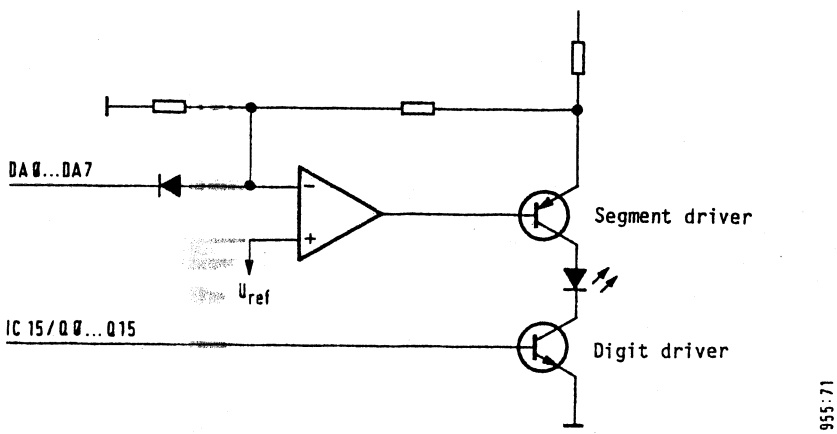

Fig. 9-19 Simplified circuit diagram of the power output stage

DAC

The DAC built up around IC 64 controls the current drawn from the power supply, keeping it constant irrespective of the number of illuminated segments, the overall display thus representing a constant load on the power supply.

9.2.21 CPU BOARD [955-F1]

The CPU board controls the complete instrument.

The CPU board is subdivided into functional groups:

- Voltage monitor
- Computer core
- Instrument bus matching
- OD-15 digital control.

The tasks of the voltage monitor are as follows:

- Controlled power-up of the computer core when the instrument is switched on.
- When the instrument is switched on: to switch off the computer core under program control during operating pauses in ANLG mode.
- When the instrument is switched on: re-activating the computer core by means of a front panel interrupt following a service request.

- Output of a TRAP signal when the instrument is switched off.
- Initialization of the instrument with a "RESET key" via the TRAP signal path.
- Storage of the "line ON/OFF" and "RAM operating voltage good/bad" statuses.

The heart of the voltage monitor is the flip-flop consisting of transistors IC 32/2, IC 32/3. This flip-flop goes into the normal "OFF" position when the operating voltage is applied.

The output of the flip-flop is passed to the computer core as RESET signal and as V_{CC} ON/OFF signal via a divider stage IC 32/1, IC 34/1, IC 34/2 and two delay stages IC 30/1, IC 30/2.

The flip-flop described can be controlled from the line side by the INHIBIT signal via IC 30/4, IC 30/3, as well as from the front panel and from the "Reset" key via C 4/R 61. The flip-flop can be set to the "ON" state via these signal paths. The computer can also control the flip-flop via IC 19, IC 35, T 2, T 4, the "OFF" status being achievable in this case.

The event "line OFF" is reported to the computer as TRAP via the INHIBIT signal IC 30/4, IC 30/3, IC 29/4, IC 29/3, IC 29/2.

The two flip-flops formed by T 5/T 6 and T 8/T 9 also have a normal position when the operating voltage is applied. They detect a failure of the 5 V operating voltage and/or the RAM operating voltage. They can be polled by the computer via AD4, AD5 and set to the inverted position via T 7.

The computer core consists of the usual components: processor, memory, address decoder, driver stage for "memory-mapped" I/O gates (IC 14) and a circuit for inserting WAIT states for I/O commands (IC 23/1, IC 23/2, IC 26/1).

The computer core is switched off during the operating pauses in ANLG mode in order to reduce the current consumption (important for battery operation). The aforementioned voltage monitor performs this program-controlled de-energization and re-energization. No de-energization takes place in DGTL mode, since a constant exchange of data is necessary in this case.

Instrument bus matching is necessary because all bus signals operate with 10 V CMOS thresholds, as opposed to the 5 V TTL thresholds of the computer core. An 8-bit wide, bidirectional level shifter is inserted in the data bus (IC 10).

The address and control buses pass via unidirectional level shifters IC 4/1, IC 4/2, IC 5, R 19, R 20, R 22, R 23, R 46, R 62.

The RAM IC 2 was installed to allow testing of the instrument bus in a self-test routine.

OD-15 digital control essentially consists of a stationary application of 7 BCD signals, any changes in which must take place synchronously with the operations in the OD-15.

The setting information is first stored in memories IC 43, IC 45, IC 47, IC 49 in byte-serial form. The strobe to IC 49 additionally triggers a transfer circuit (IC 41) which activates memories IC 44, IC 46, IC 48, IC 50. The $\overline{\text{data change}}$ signal from the OD-15 causes byte-parallel transfer of the setting information to the final memories IC 44-IC 50.

Further information can be found in Section 9.3 (General software description), where the various versions are also listed (9.3.11).

9.2.22 10 kHz BAND-PASS FILTER/25 Hz MECH. [955-K]

This 10 kHz band-pass filter is connected downstream of the 3.1 kHz band-pass filter and thus allows measurement of closely adjacent carriers. If the line "b = 25 Hz" is LOW, transistors T 2 and T 7 are connected through, whereas T 1 and T 6 are off, i.e. the filter is bypassed.

If "b = 25 Hz" is HIGH, the filter is switched into the signal path. It consists of two mechanical filters. The signal is amplified after the first filter module in order to compensate for the losses in the first filter. R 10/R 14 compensate for the typical temperature response of the overall filter. The signal is again amplified downstream of the second filter module (Fi 2) in order to compensate for the losses in the second filter module. The band-pass filter in the feedback path causes selective amplification of the 10 kHz signal.

9.2.23 TRACKING GENERATOR [955-AN], [955-AO], [955-AP], [955-AH], [955-AK], Series A ... D

Filtering, DC converter [955-AP], [955-AH]

A voltage of +15 V is necessary to generate the high output levels. It is obtained in the DC converter module IC 501.

Filter 1, filter 2 [955-AN], [955-AO]

The purpose of the low-pass filter with a cut-off frequency of 12 MHz is to allow the signal supplied by the calibrating mixer to pass unattenuated in the useful frequency band and to attenuate the interference lines coming from the calibrating mixer in the other frequency range.

Amplifier stages [955-AK]

Amplifier stage 1:

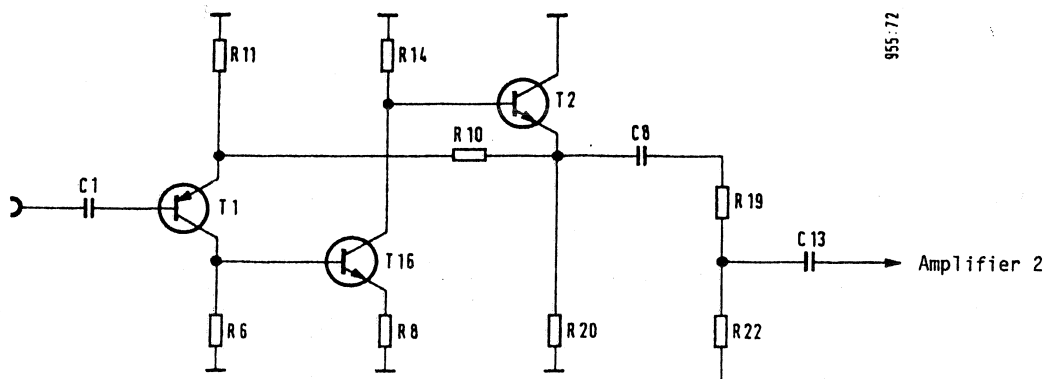

$$V_o \approx \frac{R6}{R11} \cdot \frac{R8}{R14}$$

$$\frac{1}{V_{tot}} \approx \frac{1}{V_o} + \frac{R11}{R6} \quad \Rightarrow V_{tot} \approx 20\ dB$$

Fig. 9-20 Simplified AC circuit diagram, amplifier stage 1

Amplifier stage 1 is a multi-stage, negative-feedback amplifier. The gain is largely determined by R 10 and R 11. If T 3 is switched on, the output signal is attenuated by 5 dB (R 22/R 19 + R 22).

Amplifier stage 2:

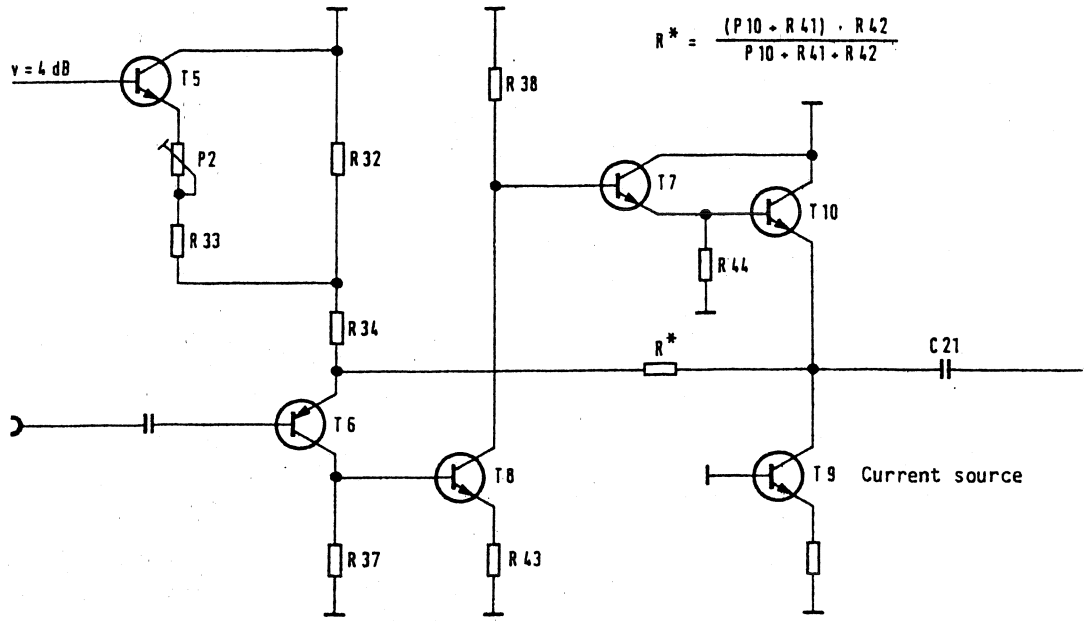

Fig. 9-21 Simplified AC circuit diagram, amplifier stage 2

Amplifier stage 2 is a negative-feedback, multi-stage amplifier with output coupling stage (T 7, T 10). T 9 forms the constant current source for the output coupling stage. If T 5 is switched on by the line from IC 7 Pin 9, the gain of this stage is increased by 4 dB.

Amplifier stage 3:

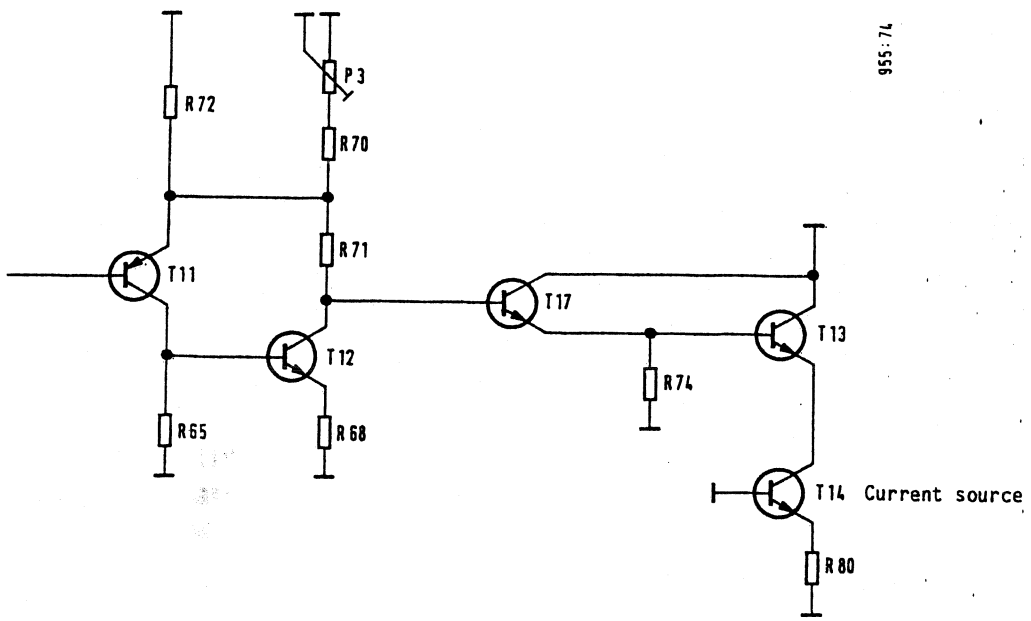

Fig. 9-22 Simplified AC circuit diagram, amplifier stage 3

$$V_o \approx \frac{R\ 65}{R^* \parallel R\ 71} \times \frac{R\ 71 + R^*}{R68} \qquad V_{St} \approx 1 + \frac{R\ 65 \times R\ 71}{(R\ 65 + R\ 68) \times R^*} \qquad R^* = \frac{(P3 + R\ 70) \times R\ 72}{R\ 70 + R\ 72 + P3}$$

$$\frac{1}{V_{tot}} = \frac{1}{V_o} + \frac{1}{V_{St}} \quad \Rightarrow \quad V_{tot} \approx 8\ dB$$

Amplifier stage 3 is also a multi-stage, negative-feedback amplifier with a bootstrapped output stage.

Fine level control

A controllable DC voltage (0 ... -1,6 V) must be output to the calibrating mixer via jack Bu 4 to allow fine control of the PSE level. Consequently, the level at Bu 5 is attenuated between 0 dB ... 6,5 dB. The voltage obtained at Gl 3 is fed to the D/A converter (IC 4) via IC 6 for this purpose. The voltage is then stepped down by the computer to give the desired output level.

The following applies: $A\ [dB] = 20 \times \log\ (1 - 0{,}5533\ \frac{N}{4096})$

9.3 GENERAL SOFTWARE DESCRIPTION

9.3.1 PROGRAM SEQUENCE AT POWER-UP

The RAM contents are checked first when the SPM-15 is powered up; if the RAM contents have been lost, the RAM is initialized. After this, all I/O gates are initialized and set according to the current RAM contents. If the IEC BUS option is not installed, the CPU switches itself off after completing initialization.

9.3.2 INPUT METHOD

9.3.2.1 Input method for manual operation

Every input is made on an interrupt basis, although the CPU is first switched on before the interrupt is processed. The input programs perform the following tasks:

- Limit monitoring
- Checking the compatibility with the currently valid instrument status
- Setting and resetting of flags
- Copying the preliminary table contents into the main table

Thereafter, the setting program related to each key group is called up and processed.

Only in the digital program does the system remain in the corresponding processing program. The measurements and settings are updated constantly, the interrupt being permissible at any time.

The system quits all other setting programs after their execution and the computer core is deactivated. If an IEC BUS is present, the system skips to a HALT routine.

9.3.2.2 Input method for IEC BUS operation

In the case of IEC BUS operation, the computer jumps out of the HALT routine; after execution of the general IEC BUS program, the preliminary table is manipulated and the input data checked for validity. Thereafter, an identifier is set for every program in order to convert all changes made in the preliminary table into physical actions, i.e. adjustments in the instrument, after completion of all inputs.

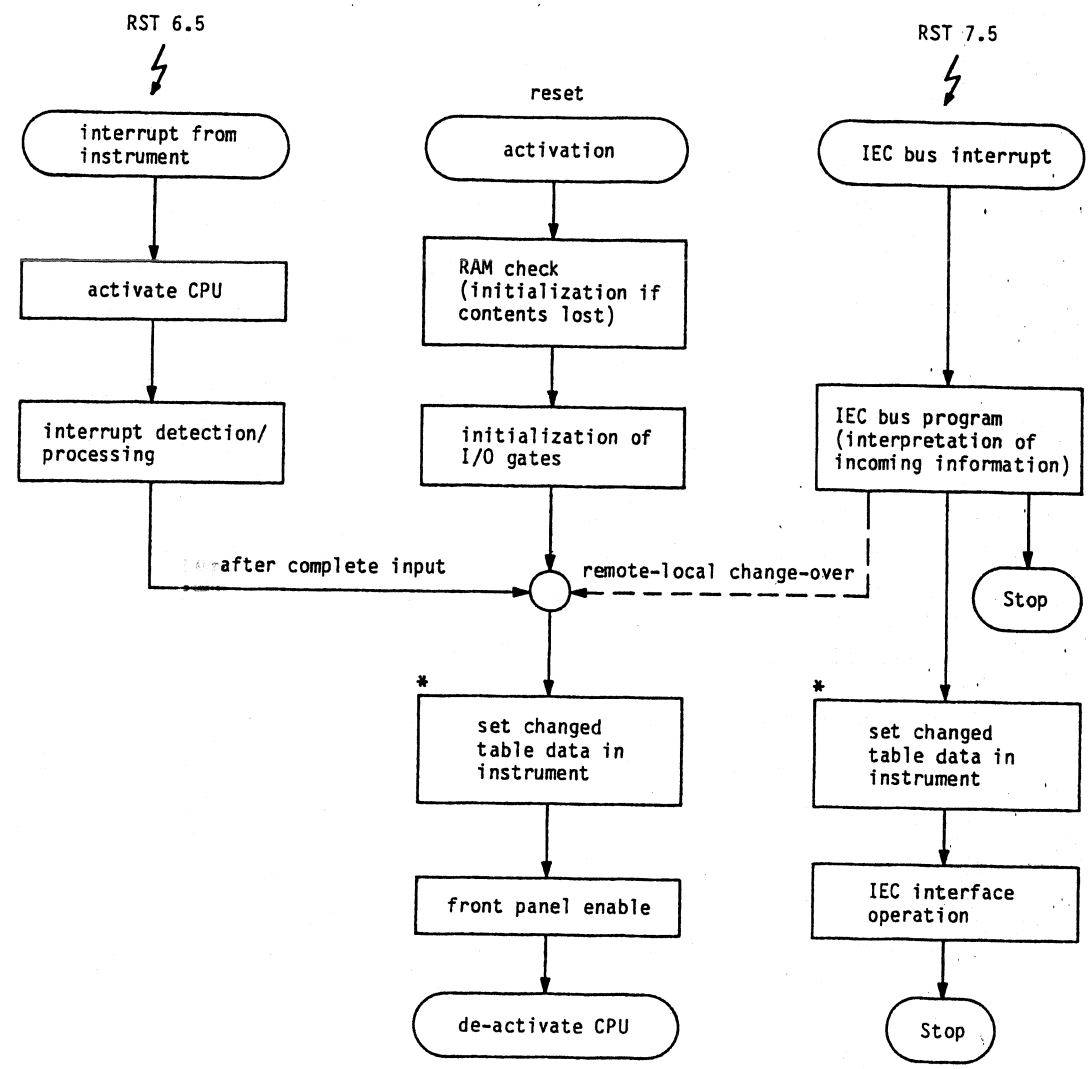

Fig. 9-23 Software, general program sequence

* Only that program section is executed whose related table data have been changed!

9.3.3 MEMORY ASSIGNMENT

9.3.3.1 Memory assignment, CPU [955-F1] (32 K)

Address in hexadecimal	Function
ØØØØ to 7FFF	Program ROM
8ØØØ to 87FF	Data RAM
CØØØ to CØØ3	Input gates on CPU
87ØØ to 87FF	Stack

9.3.3.2 Memory assignment, CPU-F1, modified (48 K)

Address in hexadecimal	Function
ØØØØ to BFFF	Program ROM
EØØØ to FFFF	Data RAM
CØØØ to CØØ3	Input gates on CPU
E7ØØ to E7FF	Stack

9.3.4 I/O ASSIGNMENT

Refer to Section 9.4 for the precise assignments of the individual gates.

Address in hexadecimal	Assembly
READ 26	DC amplifier, 4 bit ADC, for DC level
WRITE 2Ø, 21	IF amplification, 25 Hz filter
WRITE 22	IF amplifier control
WRITE 23, 24	DC amplification, Ø.1 dB increments
WRITE 25	Calibrating controller
WRITE 27	Display instrument, 15 dB amplifier
WRITE 4Ø	Frequency control
WRITE 41	Input section
WRITE 42	Keyboard columns
WRITE 44	Data for front panel (display logic)
WRITE 45	Address for RAM on display logic
WRITE 46	Display logic status
WRITE 47	Front panel
READ 4Ø, 41	ADC poll
READ 42, 43	Delta frequency poll
READ 44	Interrupt status poll
READ 45	Keyboard line poll
READ 46	Level switch poll
WRITE 8Ø, 81, 82, 83	Synthesizer data
WRITE 1E, 1D, 1F	PSE activation

9.3.5 ANALOG MEASURING PROGRAMS

For the analog measuring programs, the instrument is set in accordance with given divider settings, the currently valid measuring range being displayed in the level display in accordance with the selected display type (dB/dBm-ABS/ABS-REF). The display applies for 0 dB display on the instrument.

SELECTIVE LEVEL MEASUREMENT
Scale 1 dB, 10 dB, demodulator operation

Mode	Activation
Scale 1 dB	Low-noise
Scale 10 dB	Low-distortion
Demodulator	Normal
Search	Normal

9.3.5.1 Level diagram for selective level measurement and low-noise modulation

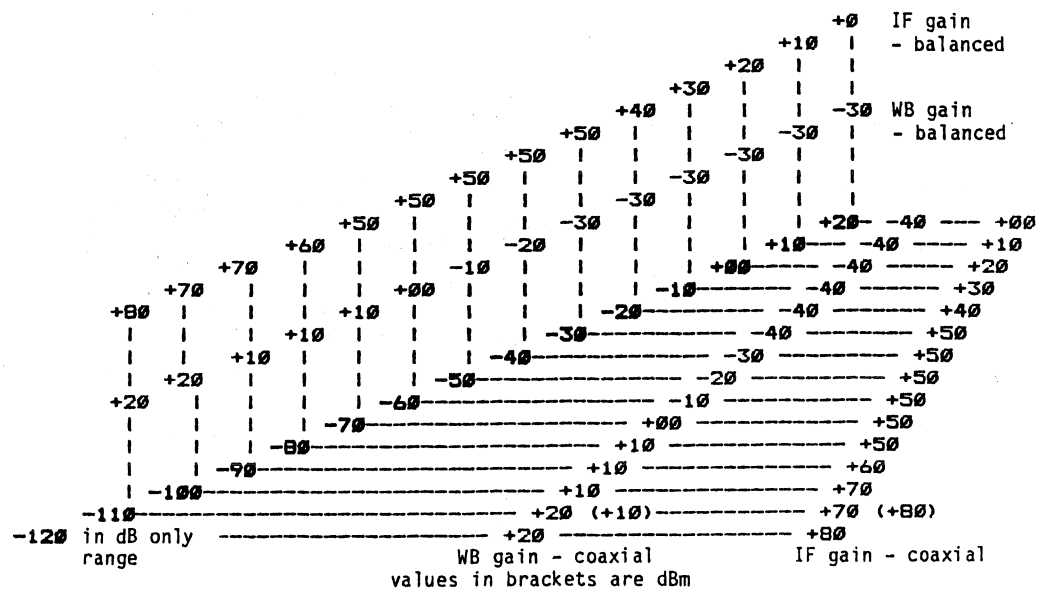

9.3.5.2 Level diagram for selective measurement and low-distortion modulation

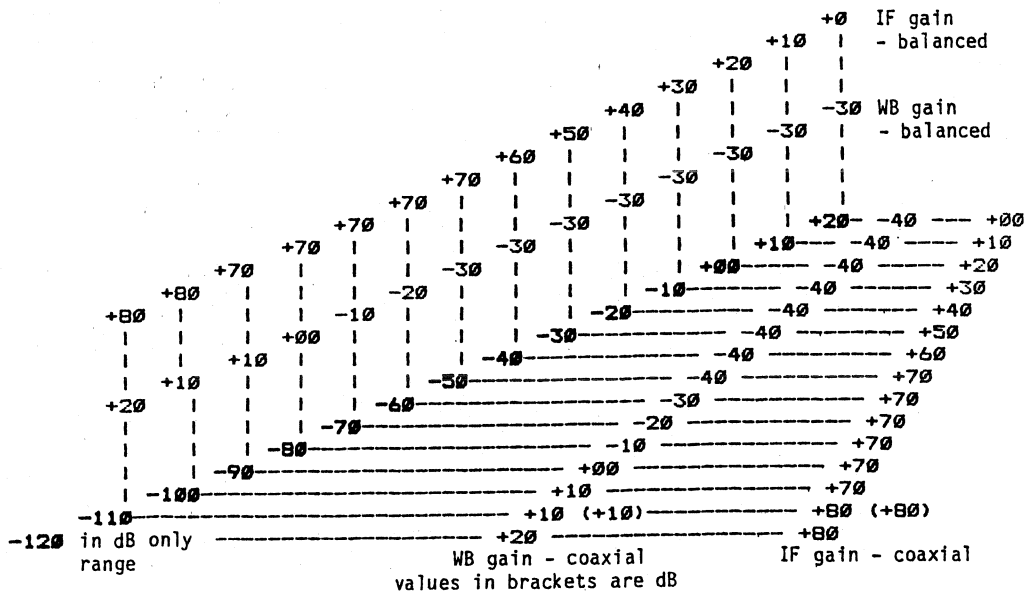

9.3.5.3 Program sequence for analog selective level measurement and ABS mode

Make program-specific basic settings (e.g. select correct scale)
Set WB section as per specified measuring program
Calculate and set IF gain
Calculate and set DC gain DC gain = -MB - WB gain - IF gain - 2Ø

9.3.5.4 Program sequence for analog selective level measurement and ABS-REF mode

Make program-specific settings as per preselected mode	
Set WB section as per specified measuring program	
IS 10 dB scale selected?	
Yes	No
IF gain = -MB - WB gain - 3Ø	IF gain = -MB - WB gain - 2Ø
Calculate and set DC gain	

Since the additional signal required for 0 dB display on the meter is supplied by the DC amplifier in the ABS-REF mode and since this only amplifies, the IF gain is set 10 dB lower on the 10 dB scale, since the 1 dB, 0.1 dB and mB values have to set in the DC amplifier for correction.

With the 1 dB scale, the IF is again set normally, since only the 0.1 dB and the mB values have to be set in the DC amplifier for correction.

Example:	MB = -10 dB	10 dB scale	Low-noise modulation
	Reference level = -12.35 dB		Coaxial Input
	WB gain as per table	-40 dB	
	IF gain	+20 dB	Calculated from table value -10 dB
	DC gain	+2,35 dB	Calculated from X.YZ value of reference level
Example:	MB = -23 dB	1 dB scale	Low-distortion modulation
	Reference level = -24.67 dB		Coaxial Input
	WB gain as per table	-40 dB	
	IF gain as per table	+20 dB	
	DC gain	+3.67 dB	Calculated from X.ØØ value of MB and Ø.YZ value of reference level

9.3.6 ANALOG WIDEBAND MEASUREMENT

For analog wideband measurement, the signal present at the input in wideband form is passed directly to the rectifier via the pre-amplifier, meaning that only the wideband dividers and/or amplifiers and the DC amplifier can be changed in this program.

Level diagram for wideband level measurement in dB, 20 dB scale:

	Coaxial		Balanced	
Input level	WB gain	DC gain	WB gain	DC gain
+20	-40	00	-30	00
+10	-30	00	-20	00
+00	-20	00	-10	00
-10	-10	00	+0	00
-20	+00	00	+10	00
-30	+10	00	+19	+1
-40	+19	+1	+19	+11
-50	+19	+1		

9.3.7 DIGITAL MEASURING PROGRAM

9.3.7.1 Digital measuring program - Calibration off

In the digital measuring program, the measurement result is displayed in digital form, the analog meter being switched off. Alignment is performed in accordance with the low-noise level diagram. Demodulator operation and searching are not possible.

Alignment program for digital measurement and low-noise modulation
Align WB gain and IF gain as per level diagram (low-noise) until level in window $-10\ dB \leq X \leq 0\ dB$
Align DC gain until level in ADC range $-1\ dB \leq X \leq +1\ dB$
Take samples at the ADC in accordance with the filter and level present
Form and display mean value

9.3.7.2 Digital program - Calibration on

Alignment program for digital measurement and modulation with linearity check	
If $-40\ dB \leq$ WB gain $\leq +20\ dB$	
	Change WB gain until level on mixer 1 = -40 dB
If $0\ dB \leq$ IF gain $\leq +80\ dB$	
	Change IF gain until level on instrument $-20\ dB \leq X \leq -10\ dB$
	Increase WB gain by 10 dB, reduce IF gain by 10 dB
	Check modulation
If pre-amplifier produces distortion	
Set WB gain and IF gain to last setting before distortion	
Align DC gain until level in ADC range $-1\ dB \leq X \leq +1\ dB$	
Take samples at the ADC in accordance with the filter and level present	
Form and display mean value	

9.3.8 "FULL RANGE" SEARCH

Search
If $F_{min} \leq F_{current} \leq F_{max}$
Display software step + frequency until level above specified threshold
Switch on 25 Hz filter
If $F_{min} \leq F_{current} \leq F_{max}$
Display software step + frequency until level above specified threshold
Quit search program

9.3.9 AUTOMATIC LEVEL CALIBRATION

9.3.9.1 Calibration criteria

Irrespective of the setting of the calibration key, calibration is always performed when the line power is switched on. Furthermore, calibration is always performed when the bandwidth changes.

If calibration is activated, i.e. the red LED is off, calibration takes place
- following a frequency change of more than 10%,
- if the wideband gain changes,
- if more than 2 minutes have expired.

In addition to these calibration criteria, calibration takes place immediately after the calibration key is switched on (red LED off).

Individual calibration is possible with remote control via the IEC bus. At the end of this calibration, the red LED above the calibration key lights up.

9.3.9.2 Calibration frequencies

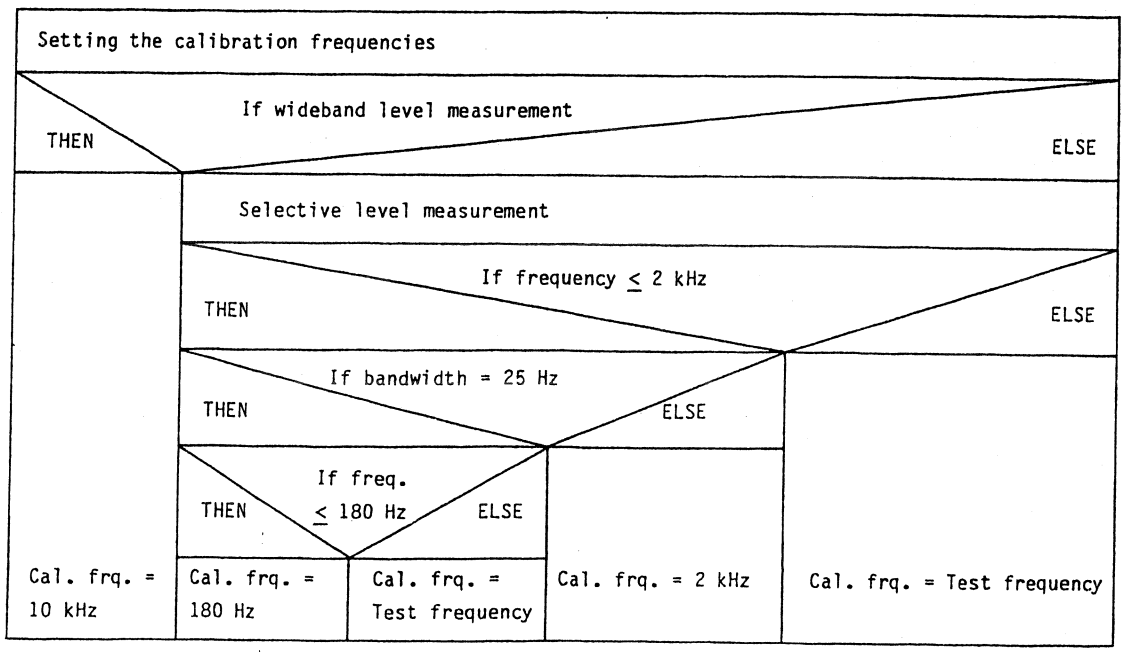

9.3.9.3 Calibration routine

The set calibration value is
for "dB": 0 dB;
for "dBm", the inaccuracy of the dBm correcting amplifier is also calibrated out, meaning that the mB digit of the correcting amplifier must be subtracted from the calibration level supplied.

For both "analog" and "digital", the deviation is corrected in the calibration controller, i.e. the deviation is not calculated into the result at all for "digital".

Write CAL into level display	
Calculate and set calibrating frequency	
If PSE on THEN	ELSE
Attenuate PSE to -55 dB	—
Calculate and set IF gain for calibration	
Switch on calibrating level	
Change calibrating controller until set calibrating level reached	
Set test frequency	
If PSE on THEN	ELSE
Return PSE level to correct setting	—
Calculate and set IF gain for measurement	
Switch measuring path through	
If demodulator mode THEN	ELSE
Switch demodulator back on	—
Write level into level display again	

9.3.10 CONTINUOUS FREQUENCY ADJUSTMENT

The deviation of the frequency counter from the set value of 5000 is observed and, depending on the selected program, the offset converted into a corresponding frequency change.

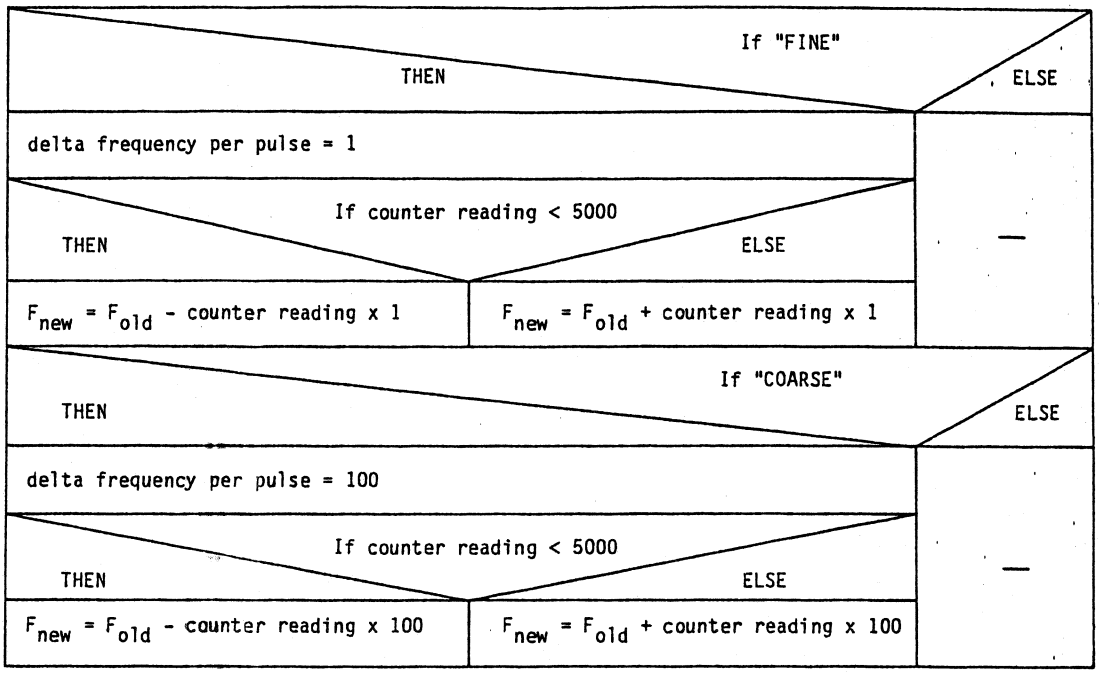

9.3.11 SOFTWARE VERSIONS

Series A-D

There are fundamental hardware differences between instruments Series A-D and Series E... which preclude the installation of software from Series E onwards in instruments of Series A-D. However, it is possible to install software corresponding to the software from Series E onwards. The following modification is necessary for this software version (D3...):

Series A: On these instruments, the CPU board [955-F] must be replaced by a new, modified version [955-F1] (48K). IEC bus operation is impossible due to other hardware differences (e.g. weaker power supply)!

Series B-D: On these instruments, the CPU board [955-F1] must be modified (memory expansion 32K -> 48 kB ROM). Special Conversion Instructions are available for this purpose.

Series E...

Series E-L: These instruments can be fitted with the same software version. They have a modified [955-F1] CPU with 48 kB (3 x 16 K) ROM memory capacity.

Series M...: The ROM memory is changed from 3 x 16 kB to 2 x 24 kB from this series onwards.

9.4 GATE ASSIGNMENTS

9.4.1 GATE ASSIGNMENTS, RECEIVER

READ	A D R : 2 6 H	
BIT 7:	X	
BIT 6:	X	
BIT 5:	X	
BIT 4:	X	0FH = LEVEL > +1 dB
BIT 3:		07H = -1 dB < LEVEL < +1 dB
BIT 2:		03H = -10 dB < LEVEL < -1 dB
BIT 1:		01H = -20 dB < LEVEL < -10 dB
BIT 0:		00H = LEVEL < -20 dB

WRITE	A D R : 2 0 H		
BIT 7:	IF GAIN	where:	21H = 0 dB
BIT 6:	IF GAIN		22H = 10 dB
BIT 5:	IF GAIN		24H = 20 dB
BIT 4:	IF GAIN		28H = 30 dB
BIT 3:	IF GAIN		30H = 40 dB
BIT 2:	IF GAIN		50H = 50 dB
BIT 1:	IF GAIN		90H = 60 dB
BIT 0:	IF GAIN		10H = 70 dB
			10H = 80 dB

WRITE	A D R : 2 1 H		
BIT 7:	X	where:	xxxx xx00B = 0 dB
BIT 6:	X		xxxx xx00B = 10 dB
BIT 5:	X		xxxx xx00B = 20 dB
BIT 4:	X		xxxx xx00B = 30 dB
BIT 3:	25 Hz		xxxx xx00B = 40 dB
BIT 2:	100 Hz		xxxx xx00B = 50 dB
BIT 1:	IF amplifier		xxxx xx00B = 60 dB
BIT 0:	IF amplifier		xxxx xx01B = 70 dB
			xxxx xx10B = 80 dB

WRITE	A D R : 2 2 H
BIT 7:	Selective = L
BIT 6:	Send level
BIT 5:	Wideband
BIT 4:	Demodulator on
BIT 3:	L = upper/H = lower sideband
BIT 2:	X
BIT 1:	Signal detector on: L = active
BIT 0:	IF RELAY Change-over relay trip: L = active

WRITE	A D R : 2 3 H
BIT 7:	X
BIT 6:	X
BIT 5:	X
BIT 4:	X
BIT 3:	Refer to Section 9.4.4
BIT 2:	
BIT 1:	
BIT 0:	

WRITE	A D R : 2 4 H
BIT 7:	
BIT 6:	
BIT 5:	
BIT 4:	Refer to Section 9.4.4
BIT 3:	
BIT 2:	
BIT 1:	
BIT 0:	

WRITE	A D R : 2 5 H
BIT 7:	
BIT 6:	
BIT 5:	
BIT 4:	Refer to Section 9.4.4
BIT 3:	
BIT 2:	
BIT 1:	
BIT 0:	

WRITE	A D R : 2 7 H
BIT 7:	X
BIT 6:	X
BIT 5:	X
BIT 4:	X
BIT 3:	15 dB amplifier
BIT 2:	H = unexpanded scale L = expanded (1 dB) scale
BIT 1:	Switch off meter
BIT 0:	Store meter reading

WRITE	A D R : 4 0 H	
BIT 7:	X	
BIT 6:	X	
BIT 5:	X	
BIT 4:	L = Relay active	RELAY INPUT
BIT 3:	X	
BIT 2:	X	
BIT 1:	Read out frequency	
BIT 0:	Set frequency	

INPUT FIELD, NORMAL VERSION:

WRITE	A D R : 4 1 H	
BIT 7:		
BIT 6:		
BIT 5:	r6	Z = 75 Ω
BIT 4:	r5	RF transformer/AF transformer
BIT 3:	r4	RF transformer/AF transformer
BIT 2:	r3	Z = 600 Ω
BIT 1:	r2	Z = 150 Ω
BIT 0:	r1	Z = 124 Ω

INPUT FIELD, WECO VERSION:

WRITE	A D R : 4 1 H	
BIT 7:		
BIT 6:		
BIT 5:	r6	Z = 75 Ω and/or switch RF/AF transformer
BIT 4:	r5	124/0 Ω and/or coaxial
BIT 3:	r4	600/124 Ω
BIT 2:		
BIT 1:	r2	Z = 135 Ω and/or Z = 124 Ω
BIT 0:	r1	Z = 600 Ω

WRITE	A D R : 4 2 H	
BIT 7:	Z7	
BIT 6:	Z6	
BIT 5:	Z5	
BIT 4:	Z4	
BIT 3:	Z3	Refer to Section 9.4.5
BIT 2:	Z2	
BIT 1:	Z1	
BIT 0:	Z0	

WRITE	A D R : 4 4 H	
BIT 7:	D7	
BIT 6:	D6	
BIT 5:	D5	
BIT 4:	D4	
BIT 3:	D3	Refer to Section 9.4.6
BIT 2:	D2	
BIT 1:	D1	
BIT 0:	D0	

WRITE	A D R : 4 5 H	
BIT 7:	X	
BIT 6:	X	
BIT 5:	X	
BIT 4:	X	
BIT 3:	MA3	
BIT 2:	MA2	Refer to Section 9.4.6
BIT 1:	MA1	
BIT 0:	MA0	

WRITE	A D R : 4 6 H	
BIT 7:	IpI = 10 dB	
BIT 6:	p > 0 dB	
BIT 5:	p = 0 dB	
BIT 4:	p < 0 dB	
BIT 3:	ADC enable	
BIT 2:	Wideband	
BIT 1:	DGTL	
BIT 0:	DAV signal	(Note: data valid)

WRITE	A D R : 4 7 H
BIT 7:	X
BIT 6:	X
BIT 5:	X
BIT 4:	X
BIT 3:	Level switch on
BIT 2:	Reset level switch flip-flop
BIT 1:	Reset calibrating clock flip-flop
BIT 0:	Reset dB/dBm flip-flops

READ	A D R : 4 0 H	
BIT 7:	X	
BIT 6:	Signal detector	H = signal present
BIT 5:	X	
BIT 4:	D A C	L = DATA ACCEPTED
BIT 3:	mB digit x8	(mB = millibel)
BIT 2:	mB digit x4	
BIT 1:	mB digit x2	
BIT 0:	mB digit x1	

READ	A D R : 4 1 H
BIT 7:	Level STATUS dB digit 1 corresponds to H
BIT 6:	Level STATUS Polarity pos. corresponds H
BIT 5:	Level STATUS X
BIT 4:	Level STATUS ADC Out of Range corresponds to H (b4 = 1 and b7 = 0)
BIT 3:	0.1 dB digit x8
BIT 2:	0.1 dB digit x4
BIT 1:	0.1 dB digit x2
BIT 0:	0.1 dB digit x1

READ	A D R : 4 2 H
BIT 7:	10 Hz digit x8
BIT 6:	10 Hz digit x4
BIT 5:	10 Hz digit x2
BIT 4:	10 Hz digit x1
BIT 3:	1 Hz digit x8
BIT 2:	1 Hz digit x4
BIT 1:	1 Hz digit x2
BIT 0:	1 Hz digit x1

READ	A D R : 4 3 H
BIT 7:	1 kHz digit x8
BIT 6:	1 kHz digit x4
BIT 5:	1 kHz digit x2
BIT 4:	1 kHz digit x1
BIT 3:	100 Hz digit x8
BIT 2:	100 Hz digit x4
BIT 1:	100 Hz digit x2
BIT 0:	100 Hz digit x1

READ	A D R : 4 4 H	
BIT 7:	dB/dBm flag	(Bit for dB = LOW, dBm = HIGH)
BIT 6:	0	
BIT 5:	dB/dBm interrupt	
BIT 4:	Calibrating clock interrupt	
BIT 3:	Key interrupt	
BIT 2:	Level switch interrupt	
BIT 1:	Frequency interrupt	
BIT 0:	Level interrupt	

READ	A D R : 4 5 H	
BIT 7:	X	
BIT 6:	X	
BIT 5:	X	
BIT 4:	X	
BIT 3:	Col. 3	
BIT 2:	Col. 2	Refer to Section 9.4.5
BIT 1:	Col. 1	
BIT 0:	Col. 0	

READ	A D R : 4 6 H
BIT 7:	x
BIT 6:	x
BIT 5:	x
BIT 4:	x
BIT 3:	Data whether level switch operated
BIT 2:	D3 for level switch direction detection
BIT 1:	D2 for level switch direction detection
BIT 0:	D0 for level switch direction detection

WRITE	A D R : 8 0 H
BIT 7:	10 Hz digit x8
BIT 6:	10 Hz digit x4
BIT 5:	10 Hz digit x2
BIT 4:	10 Hz digit x1
BIT 3:	1 Hz digit x8
BIT 2:	1 Hz digit x4
BIT 1:	1 Hz digit x2
BIT 0:	1 Hz digit x1

WRITE	A D R : 8 1 H
BIT 7:	1 kHz digit x8
BIT 6:	1 kHz digit x4
BIT 5:	1 kHz digit x2
BIT 4:	1 kHz digit x1
BIT 3:	100 Hz digit x8
BIT 2:	100 Hz digit x4
BIT 1:	100 Hz digit x2
BIT 0:	100 Hz digit x1

WRITE	A D R : 8 2 H
BIT 7:	100 kHz digit x8
BIT 6:	100 kHz digit x4
BIT 5:	100 kHz digit x2
BIT 4:	100 kHz digit x1
BIT 3:	10 kHz digit x8
BIT 2:	10 kHz digit x4
BIT 1:	10 kHz digit x2
BIT 0:	10 kHz digit x1

WRITE	A D R : 8 3 H
BIT 7:	X
BIT 6:	X
BIT 5:	X
BIT 4:	X
BIT 3:	1 MHz digit x8
BIT 2:	1 MHz digit x4
BIT 1:	1 MHz digit x2
BIT 0:	1 MHz digit x1

WRITE	A D R : 8 4 H	
BIT 7:	Z = 75 Ω	Rel 1
BIT 6:	Calibrate	Rel 2/Rel 3
BIT 5:	a1 = 20 dB	Rel 4
BIT 4:	a1'= 20 dB	Rel 5
BIT 3:	v1 = 10 dB	Rel 6
BIT 2:	v2 = 20 dB	Rel 7
BIT 1:	v = 9.03 dB	Rel 8
BIT 0:	v = 6.02 dB	Rel 9

WRITE	A D R : 8 5 H	
BIT 7:	X	
BIT 6:	X	
BIT 5:	X	
BIT 4:	RF RELAY	L = Relay active
BIT 3:	a = 2 dB	L = Attenuation on
BIT 2:	v = 6.85 dB, simultaneously switch v = 6.02 dB	
BIT 1:	Bandwidth = 3.1 kHz	
BIT 0:	Bandwidth = 1.74 kHz	

9.4.2 GATE ASSIGNMENTS, TRACKING GENERATOR (PSE)

9.4.2.1 Gate assignments, PSE (Series A ... D)

WRITE	A D R : 1 D H			
BIT 7:	H = PSE on			
BIT 6:	X			
BIT 5:	PSE RELAY		L = PSE Relay active	
BIT 4:	H = 0 dB	L = -5 dB		
BIT 3:	H = +4 dB	L = 0 dB		
BIT 2:	H	L	L	H
	0 dB	-10 dB	-20 dB	not perm.
BIT 1:	H	H	L	L
BIT 0:	H = -30 dB	L = 0 dB		

WRITE	A D R : 1 E H		
BIT 7:	D A C	(bit 11)	
BIT 6:	D A C	(bit 10)	
BIT 5:	D A C	(bit 9)	
BIT 4:	D A C	(bit 8)	
BIT 3:	H = 75 Ω/coaxial		L = balanced
BIT 2:	H = low frequency		L = high frequency
BIT 1:	H = 150 Ω/RF		L = 124 Ω/RF
BIT 0:	H = 0 Ω/AF		L = 600 Ω/AF

WRITE	A D R : 1 F H	
BIT 7:	D A C	(bit 7)
BIT 6:	D A C	(bit 6)
BIT 5:	D A C	(bit 5)
BIT 4:	D A C	(bit 4)
BIT 3:	D A C	(bit 3)
BIT 2:	D A C	(bit 2)
BIT 1:	D A C	(bit 1)
BIT 0:	D A C	(bit 0)

9.4.2.2 Gate assignments, PSE (from Series E onwards), NORMAL VERSION

WRITE	A D R : 1 D H	
BIT 7:	H = PSE on	
BIT 6:	X	
BIT 5:	PSE RELAY	L = PSE Relay active
BIT 4:	H = 0 dB	L = -10 dB
BIT 3:	H = 0 dB	L = -20 dB
BIT 2:	H = 0 dB	L = -25 dB
BIT 1:	H = 0 dB	L = -40 dB
BIT 0:	H = BALANCED	L = COAXIAL

WRITE	A D R : 1 E H	
BIT 7:	D A C (bit 11)	
BIT 6:	D A C (bit 10)	
BIT 5:	D A C (bit 9)	
BIT 4:	D A C (bit 8)	
BIT 3:	H = balanced AF	L = balanced RF
BIT 2:	H = 600 Ω/R_i = 0	L = 124/150 (135) Ω
BIT 1:	H = 124 Ω/RF	L = 150 Ω/RF (135)
BIT 0:	H = 0 Ω/AF	L = 600 Ω/RF

WRITE	A D R : 1 F H
BIT 7:	D A C (bit 7)
BIT 6:	D A C (bit 6)
BIT 5:	D A C (bit 5)
BIT 4:	D A C (bit 4)
BIT 3:	D A C (bit 3)
BIT 2:	D A C (bit 2)
BIT 1:	D A C (bit 1)
BIT 0:	D A C (bit 0)

9.4.2.3 Gate assignments, PSE (from Series E onwards), WECO VERSION!

WRITE	A D R : 1 D H	
BIT 7:	H = PSE on	
BIT 6:	X	
BIT 5:	PSE RELAY	L = PSE Relay active
BIT 4:	H = 0 dB	L = -10 dB
BIT 3:	H = 0 dB	L = -20 dB
BIT 2:	H = 0 dB	L = -25 dB
BIT 1:	H = 0 dB	L = -40 dB
BIT 0:	H = BALANCED	L = COAXIAL

WRITE	A D R : 1 E H	
BIT 7:	D A C	(bit 11)
BIT 6:	D A C	(bit 10)
BIT 5:	D A C	(bit 9)
BIT 4:	D A C	(bit 8)
BIT 3:	H = balanced AF	L = balanced RF
BIT 2:	H = 124 Ω bal. and/or 75 Ω coax	L = 600, 135 Ω, R_i = 0
BIT 1:	H = 135 Ω/AF	L = 600 Ω/RF
BIT 0:	H = 0 Ω/AF	L = don't care

WRITE	A D R : 1 F H	
BIT 7:	D A C	(bit 7)
BIT 6:	D A C	(bit 6)
BIT 5:	D A C	(bit 5)
BIT 4:	D A C	(bit 4)
BIT 3:	D A C	(bit 3)
BIT 2:	D A C	(bit 2)
BIT 1:	D A C	(bit 1)
BIT 0:	D A C	(bit 0)

9.4.3 BIT CONFIGURATIONS FOR DC AMPLIFIER

9.4.3.1 ADR 25H - Calibration controller

U_A = -1.25 dB + n x 1 mB

Where n must be stored in ADR 25H as a HEX value

9.4.3.2 ADR 23H, 24H - 0.1 dB amplifier

ADR 23H D0-D4	ADR 24H D0-D7	Gain in dB
02H	89H	-5.0
02H	D9H	-4.0
03H	31H	-3.0
03H	95H	-2.0
04H	05H	-1.0
04H	82H	-0.0
05H	0EH	+1.0
05H	ACH	+2.0
06H	5EH	+3.0
07H	25H	+4.0
08H	04H	+5.0
08H	FEH	+6.0
0AH	17H	+7.0
0BH	53H	+8.0
0CH	D4H	+9.0
0EH	41H	+10.0
0FH	FFH	+11.0

9.4.4 KEY ASSIGNMENTS

ADR 45H ---> / ADR 42H	D0	D1	D2	D3
D0	Z_{in} 600 Ω	150 Ω	124 Ω	75 Ω
D1	SEND LVL	DGTL	ANLG	AUTO CAL
D2	WIDE BAND	SELEC	DEMOD	-
D3	MAN	STEP	AUTO SRCH	OFF
D4	AUS OFF	600/0	124/150	75
D5	LVL DSPL	REF	ABS->REF	-
D6	LOCAL	-	-	-

9.4.5 RAM CONTENTS OF THE DISPLAY LOGIC

ADR	D7	D6	D5	D4	D3	D2	D1	D0
0	-	"." lev.	-	-	--------- 1 dB digit ----------			
1	2)	Sig. Det.	-	-	-------- 10 dB digit ----------			
2	-	+/-	-	-	------- 100 dB digit ----------			
3	Coarse	Fine	-	-	--------- 1 Hz digit ----------			
4	-	UP mode	-	-	-------- 10 Hz digit ----------			
5	-	DOWN mode	-	-	------- 100 Hz digit ----------			
6	OFF	"." freq.	-	-	-------- 1 kHz digit ----------			
7	-	-	-	-	------- 10 kHz digit ----------			
8	10 dB	-	-	-	------ 100 kHz digit ----------			
9	1 dB	-	-	-	---------1 MHz digit ----------			
A	600/∞	150/∞	124/∞	75/∞	600/z	150/z	124/z	75/z
B	Remote	Local	Demod>	Demod<	3.1 kHz	1.74 kHz	25 Hz	Wideband
C	PSE off	0.1 dB	5 dB	75/z	124/z	150/z	0/z	600/z
				PSE	PSE	PSE	PSE	PSE
D	Auto cal	DGTL	1 dB	10 dB	ABS>REF	ABS-REF	REF	ABS
			1)	1)				
E		dB	-	-	--------- 1 mB digit ----------			
F		dBm	-	-	------- 0.1 dB digit ----------			

1) No longer activated by software from Series C onwards.

2) Segment off for CAL.

9.5 MONITOR (MONEX)-FUNCTIONS

9.5.1 GENERAL

The software implemented in the SPM-15 allows all functions of the individual assemblies to be addressed (e.g. setting of certain dividers or switching through the calibrating signal). These functions are used either via an external control section MONEX, or via the built-in monitoring mode (depending on Series).

The references to the MONEX made in these Service Instructions apply equally for the external control section MONEX and the built-in monitor mode.

These MONITOR functions, also known as WORIS functions, are as follows:

W: (Write)	Write to memory location
O: (Output)	Output to an output gate
R: (Read)	Read memory location
I: (Input)	Input from an input gate
S: (Start)	Starting a program

A command consists of

- a header W:, O:, R:, I:, S:,
- a 4-digit address field (hex notation),
- a 2-digit data field (hex), depending on command.

Example: "W:3458.5B EX"

Pressing the "EX" (Execute) key writes the value 5BH into memory location 3458H.

9.5.2 WITH EXTERNAL CONTROL SECTION "MONEX"

This option can be used with all SPM-15 instruments, irrespective of the Series. The following equipment is required:

- External control section "MONEX"
- MONEX adaptor board for SPM-15
- 26-pole 3M ribbon cable.

The MONEX includes a complete keyboard for the monitor functions, a display field and the necessary hardware. It is connected to the IEC bus interface 21 Bu 1 of the SPM-15.

MONEX-specific keys:

"MON" key:

Initialization of the monitor software. Pressing this key re-initializes the monitor software, thus making it ready for operation.

"CLR" key:

The "CLR" key can be used to delete the last character entered.

9.5.3 INTERNAL MONITOR MODE

Series A-D: only with modified CPU board [955-F1] and software version D4
Series E,F: with software versions G...
From Series G onwards: installed as standard
(also refer to Section 9.3.11, Software versions)

The normal instrument keyboard is used for operation. The key assignments in monitor mode are shown in Fig. 9-24 (at the end of the SPM-15 Service Instructions). An oscilloscope is used as display.

Preparation:

Connect the oscilloscope to TP 19 and TP 20 (chassis) of the CPU board (21) [955-F1]. Oscilloscope settings: 5 V/Div.; 0.5 ms; variable triggering.

Entering the monitor program

Press the "AUTO-CAL" and "SEND" keys simultaneously for about 1 s.

In this monitor mode, the digital level display is blanked (apart from the sign), all LEDs (except dB/dBm LED) are extinguished and "Ø----" appears in the frequency display.
All settings selected before entering the program are preserved. Only the analog meter is additionally switched on.
An IEC bus interrupt (RST 7.5) is not permissible.
The start address S:9ØØØ (= basic initialization for "external MONEX") is blocked.
The name "SPM-15" appears on the oscilloscope after setting the triggering.

Notes on operation:

- A CLR key could not be implemented for this internal monitor mode. In the event of incorrect input, press the corresponding function key again and repeat the entry.
- Do not press the dB/dBm switch on the rear in monitor mode. Switch over to normal mode, or with S:99ØØ or S:99Ø1.
- Stored program loops (as in 9.5.6) can only be terminated by briefly switching the SPM-15 off and back on again. The program is preserved in the RAM, but the monitor mode is exited.
- The input circuitry and display logic are also used in the internal monitor mode. Consequently, unrestricted manipulations in this address range are only possible with the external control section "MONEX".

Exiting:

Press reset key S3 on the CPU board,
or with "S:9090 EX"
The instrument then assumes the standard settings (basic initialization), the monitor settings thus being cancelled. The instrument undergoes basic initilization when re-energized after being switched off or following a power failure in monitor mode, i.e. the monitor mode is exited.

9.5.4 DESCRIPTION OF THE INDIVIDUAL MONITOR FUNCTIONS

"EX" key:

Execution of the command is triggered with the "EX" key.

The "W:" command - Write to memory location

Syntax:	W:xyzt.dd xyzt: Address of the memory location (hexadecimal) dd: Data byte (hexadecimal)
Effect:	The data byte dd is stored at address xyzt after pressing the "EX" key. Execution of the command is confirmed by the display: "W:xyzt.dd!"
Abbreviated entry:	The address and the data byte may be entered with less than 4 or 2 digits. In this case, they are padded with leading zeros (e.g. 3 is interpreted as 0003 or 03, respectively).

If a number key (0 ... F) is pressed after operating the "EX" key, the address is automatically increased by one and the number accepted as the first digit of the data byte. The second digit of the data byte is then entered in the usual manner.

If the "EX" key is pressed twice in succession, the address is automatically increased by one and the same data byte stored at this memory location.

If the "." key is pressed after operating the "EX" key, the address remains unchanged. The data field is cleared and ready for entry of the data byte.

The "O:" command - Output to an output gate

Syntax:	O:xy.dd xy: Address of the output gate (hexadecimal) dd: Data byte (hexadecimal)
Effect:	The data byte dd is output to the gate xy after pressing the "EX" key. Execution of the command is confirmed by the display: "O:xy.dd!"
Abbreviated entry:	The address and the data byte may be entered with less than two digits. In this case, they are padded with leading zeros (e.g. 3 is interpreted as 03).

If a number key (0 ... F) is pressed after operating the "EX" key, the address is automatically increased and the number accepted as the first digit of the data byte. The second digit of the data byte is then entered in the usual manner.

If the "EX" key is pressed twice in succession, the address is automatically increased by one and the same data byte output to this gate.

If the "." key is pressed after operating the "EX" key, the address remains unchanged. The data field is cleared and ready for entry of the data byte.

The "R:" command - Read memory location

Syntax:	R:xyzt xyzt: Address of the memory location (hexadecimal)
Effect:	The data byte dd is read from the address xyzt after pressing the "EX" key. Execution of the command is confirmed by the display: "R:xyzt.dd!" dd: Data byte (hexadecimal)
Abbreviated entry:	The address may be entered with less than 4 digits. In this case, it is padded with leading zeros (e.g. 3 is interpreted as 0003).

If the "EX" key is pressed twice in succession, the address is automatically increased by 1 and its contents read out. If the "." key is pressed after operating the "EX" key, the address remains unchanged. The data field is cleared. The address contents are read out again after pressing the "EX" key.

The "I:" command - Input from an input gate

Syntax:	I:xy
Effect:	The contents of gate xy are read out after pressing the "EX" key. Execution of the command is confirmed by the display: "I:xy.dd!"
Abbreviated entry:	The address may be entered with less than 2 digits. In this case, it is padded with leading zeros (e.g. 3 is interpreted as 03).

If the "EX" key is pressed twice in succession, the address is automatically increased by 1 and the corresponding gate contents read. If the "." key is pressed after operating the "EX" key, the address remains unchanged. The data field is cleared. The gate contents can be read again by pressing the "EX" key.

The "S:" command - Starting a program

Syntax:	S:xyzt xyzt: Start address of the program (hexadecimal)
Effect:	The program is executed from address xyzt onwards after pressing the "EX" key. Execution of the command is confirmed by the display: "S:xyzt!"
Abbreviated entry:	The address may be entered with less than 4 digits. In this case, it is padded with leading zeros (e.g. 3 is interpreted as 0003).

If the "EX" key is pressed twice in succession, the same program is called up again.

The "W:" function can be used to write a program into the free data area for subsequent starting with the "S:" function.

S:9104 Display of calibrating controller (ESG) setting

S:9394 ESG = Centre position (80H) = 0 dB
S:9395 ESG = Minimum (00H) = -1.28 dB
S:9396 ESG = Old calibration setting / 2
S:9397 ESG = Old calibration setting x 2
S:9398 ESG = Old calibration setting +1 mB
S:9399 ESG = Old calibration setting -1 mB

Demodulator

S:9118	Demod on	No frequency offset, IF filter is not changed
S:9119	Demod off	
S:9128	Demod	No frequency offset
S:9129	Demod	

Display, evaluation of measurement result

S:9117 Instrument "on"
S:9116 Display storage "on"
S:9121 Display storage "off"
S:9126 20 dB scale "on"
S:9127 1 dB scale "on"
S:9132 Enable ADC
S:9133 Inhibit ADC
S:9134 Enable adder
S:9135 Inhibit adder

Tracking generator

Calibrating mixer level

Attenuation of calibrating mixer level
x = 1 dB digit/Y = 0.1 dB digit

S:95XY 0 dB to 6.9 dB for Series A ... D
S:96XY 0 dB to 10.5 dB from Series E onwards
X = A for 10 dB, e.g. S:95A3 for 10.3 dB

PSE amplifier

	Series A ... D	from Series E onwards
S:9580	Connect 0 dB send path through	All dividers off
S:9581	10 dB divider on	10 dB divider on
S:9582	20 dB divider on	20 dB divider on
S:9583	30 dB divider on	25 dB divider on
S:9584	+4 dB amplifier on	40 dB divider on
S:9585	5 dB divider on	----------

S:9590 Tracking generator on
S:9591 Tracking generator off

Output Z value

S:9592	Coaxial output/75 Ω
S:9593	Balanced output
S:9594	124 Ω
S:9595	150 Ω (135 Ω)
S:9596	600 Ω
S:9597	R_i = 0 Ω

Miscellaneous

S:9130	Signal detector "on"
S:9131	Signal detector "off"
S:9150	Display of absolute level = -20 dB - V_{RF} - V_{IF} - V_{DC}
S:9900	Instrument working in "dB"
S:9901	Instrument working in "dBm"
S:9902	"dBm/dBrnC" -> "dBm/dB" (from Series E onwards: dB mode of dBrnC instruments)

9.5.6 PROGRAM EXAMPLE: CYCLIC ACTIVATION OF AN ADDRESS

In this example, address 84 is to be activated cyclically. The program is as follows:

Address	Code	Machine language	Meaning
E300	XRIØØ	EEØØ	Accumulator linkage
E302	CMA	2FH	Accumulator complement
E303	OUT 84H	D384H	Read accumulator contents to address 84
E305	EI	FBH	Allow interrupt 1)
E306	JMP E300H	C300E3H	Skip to program start

applies for modified [955-F1] CPU (3 x 16 kB EPROM)
normal CPU [955-F1] (2 x 16 kB): from address 83ØØ onwards
old CPU [955-F]: (2 x 8 kB): from address 63ØØ onwards

The entries are made in the following manner:

a) Write in program

W: E3ØØ.AF Ex
W: E3Ø1.ØØ Ex
W: E3Ø2.2F Ex
W: E3Ø3.D3 Ex
W: E3Ø4.84 Ex
W: E3Ø5.FB Ex 1)
W: E3Ø6.C3 Ex
W: E3Ø7.00 Ex
W: E3Ø8.E3 Ex

b) Read program (check)

R: E3ØØ Ex to R: E3Ø8 Ex

C) Start program

S: E3ØØ Ex

---

1) In internal monitor mode:
- E3Ø4.ØØ: Do not allow interrupt, program aborted otherwise.
- Abort test by briefly switching the SPM-15 off and on.

9.6 I E C B U S I N T E R F A C E (OPTION)

SPM-15 instruments from Series B onwards can be operated with an IEC bus interface. This is not possible for instruments of Series A due to hardware differences (e.g. weaker power supply).

The simplified block circuit diagram of the interface of the SPM-15 is shown in Fig. 9-25. It essentially consists of two blocks: The level adaptor of the instrument-internal bus for the bus of the interface board and the actual interface board (IEC 625 board). Reading the brochure "Interface bus IEC 625" (BN 6390/00.38) will make it easier to understand the following description.

For the microprocessor, the IEC bus interface is nothing more than a collection of input and output gates.

Data exchange between the IEC bus and the instrument takes place via these gates and is controlled by the IEC bus program. The EPROMs in which this program is stored are located not on the IEC bus interface board, but in the instrument itself.

The actual interface logic is accommodated in an IEC bus interface module. It is connected, on the one hand, via the necessary driver and receiver circuits to the interface to the IEC bus and, on the other hand, via the level adaptor to the internal instrument bus. This interface logic handles the greater part of the interface tasks independently, i.e. without using the instrument-internal microprocessor. For example, it participates independently in the IEC bus handshake cycle and decodes all messages transmitted on the IEC bus. The interface statuses assumed on the basis of these messages are written into the corresponding input gates.

A further input gate acts as transfer register for listener data, these being the data transmitted from the IEC bus to the instrument, as long as the instrument is addressed as listener (e.g. when transmitting setting parameters for the instrument).

The output gates serve

- to accommodate control commands by which the microprocessor can influence the behaviour of the interface logic (in addition to numerous other possibilities, it can, for example, stop the handshake cycle or send a Service Request signal (SRQ) via the IEC bus;
- as transfer register for data which must be transmitted from the instrument to the IEC bus, e.g. talker data and status information. Talker bytes are those data transmitted by the instrument to the IEC bus as long as the instrument is operating as talker, e.g. when the measuring result is transmitted.

  The status byte is the response of the instruments to a serial poll and contains the current instrument status. The instrument address can be set on the address switch.

The "PP switch" can be used to determine that data line from the IEC bus on which the instrument is to transmit its Request Service signal (RQS) when the controller requests its status by means of a parallel poll.

9.6.1 CIRCUITRY DESCRIPTION

A more detailed description can be found in the brochure "Interface bus IEC-625" (BN 6390/00.38).

9.6.1.1 IEC bus adaptor

The IEC bus adaptor is required in order to convert the data required for the IEC bus board from the instrument bus level of approx. 10 V to the interface bus level of 5 V and to boost the incoming data of the interface board to the level of the instrument bus.

IC 3 and IC 4/1 convert the incoming addresses from the instrument bus to the level required by the interface board.
The bidirectional level converter IC 5 is controlled via the logic built up around IC 1/1, IC 2/1, IC 2/2 and IC 1/4.

9.6.2 IEC BUS SOFTWARE DESCRIPTION

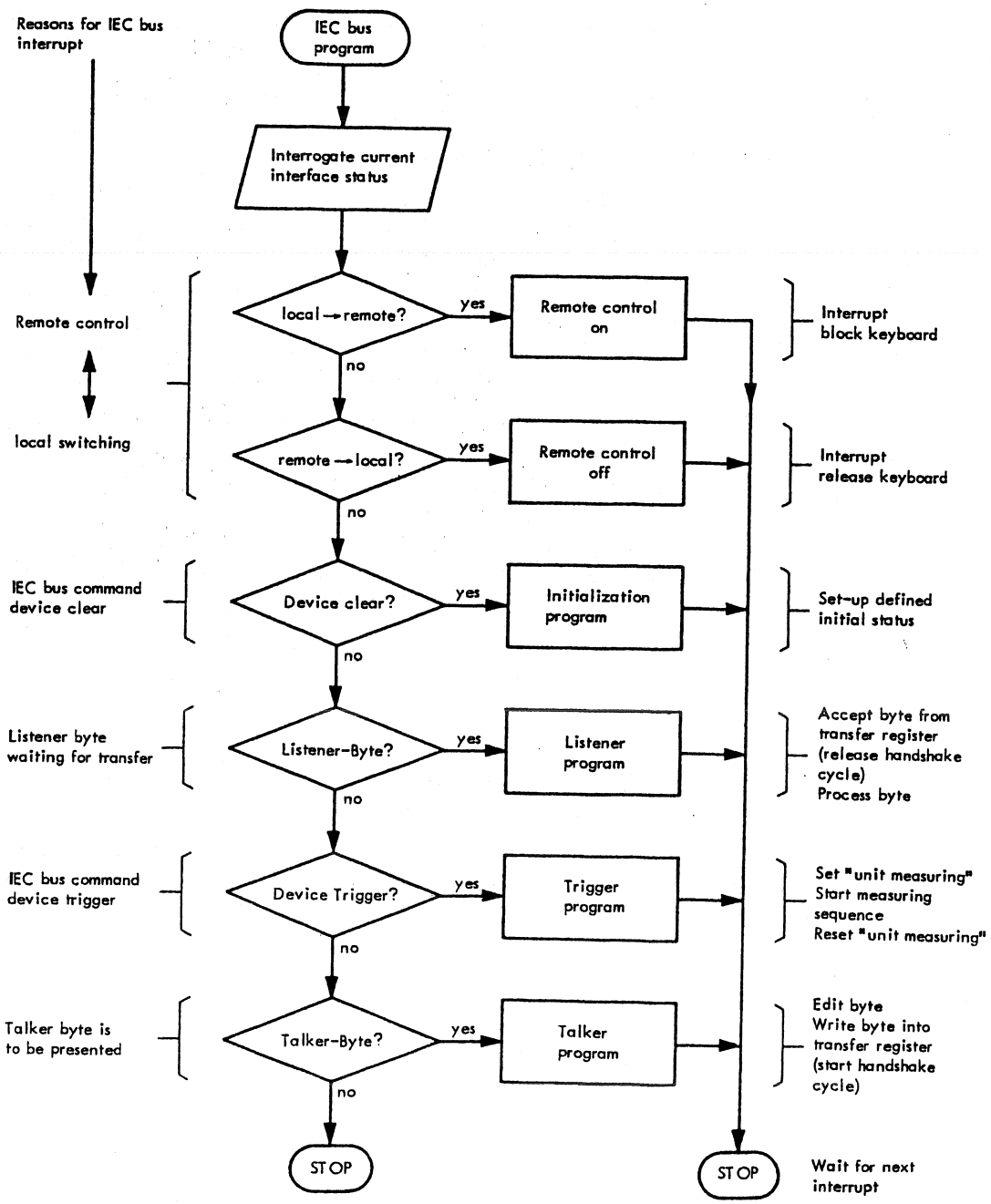

Fig. 9-26 Structure of the IEC bus program

When the IEC bus reaches a status where operation by the instrument-internal microprocessor is necessary, the IEC bus interface sends an interrupt signal to the instrument. This interrupt then causes the microprocessor to execute the IEC bus program. This is always the case when:

- the instrument is to be switched over from manual control (Local) to remote control (Remote) or from remote control to manual control;
- a listener byte has been transmitted via the IEC bus. The interface logic has then written this byte into the transfer register for listener bytes and stopped the handshake cycle. The handshake cycle remains interrupted until the microprocessor reads this byte (whereupon NDAC = false). NRFD = false is sent after processing and storage of the listener byte;
- the instrument must provide a new talker byte. When the new talker byte is written into the corresponding output gate, the handshake cycle is started (DAV = true, i.e. data valid);
- the instrument is to be triggered for a measurement by the IEC bus command "Device Trigger" (GET = Group Execute Trigger). The interface logic has then stopped the handshake cycle. It remains interrupted until the microprocessor has started the measurement and then re-enables the handshake cycle (NDAC = false and NRFD = false);
- the instrument is to be set to a defined starting status by the IEC bus command "Device Clear" (DCL or SDC = Selected Device Clear). Again, the interface logic has stopped the handshake cycle. It remains interrupted until the microprocessor has set the instrument to the starting status and then re-enables the handshake cycle (NDAC = false and NRFD = false).

If the CLR jumper is fitted on the IEC bus interface board, the IEC bus signal IFC (Interface Clear) causes initialization of the instrument. This means that the instrument can always be initialized via the IEC bus, even in the event of a possible interlock. (Important for instruments in unmanned stations where an interlock caused by other malfunctions cannot be eliminated by switching the line voltage off and back on.)

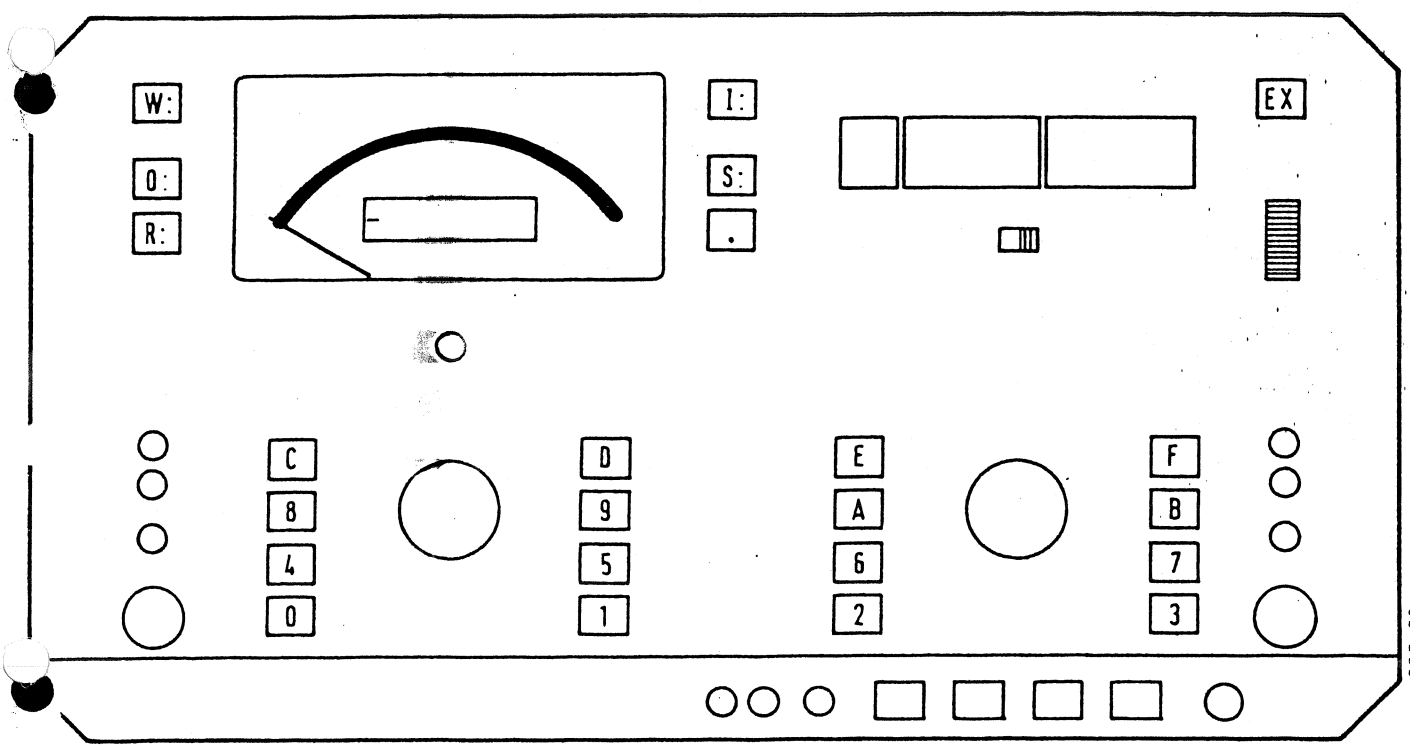

Fig. 9-24 Key assignments in monitor mode

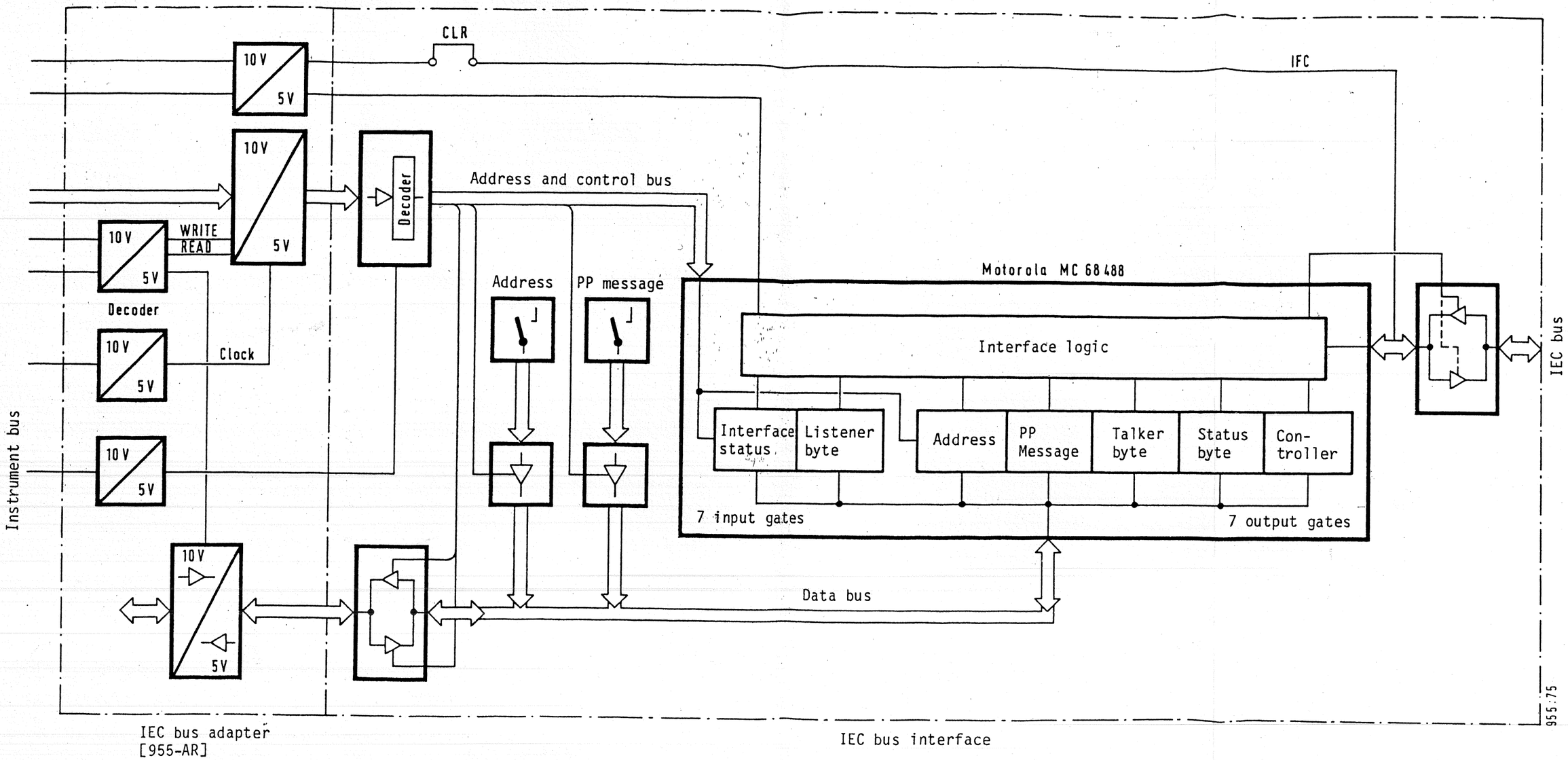

Fig. 9-25 Block circuit diagram of the IEC bus interface BN 955

6 INTRODUCTION

6.1 INTRODUCTION TO SERVICING

See part 1, SPM-15/PS-15

6.2 TEST EQUIPMENT

A list of recommended test equipment is given below. Equivalent instruments from other manufacturers can also be used.

Instrument	Requirements	Recommended type	Manufacturer	Used in section
Oscilloscope	$f \geq 100$ MHz			7.5
Frequency counter	$f \geq 60$ MHz, $\Delta f \leq 1 \times 10^{-7}$	PM 6673/03	Philips	7.5
Digital voltmeter	Resolution 1 mV Range ≥ 15 V			7.5
Power supply	Variable output 0 to 12 V			7.5
Level generator	1 to 10 MHz +10 dB	PS-15/PS-19	W&G	7.6
Signature analyser	hp compatible	5004 A/5005 A	hp	7.4

Figure 6.2-1 Test equipment

7 HINWEISE ZUR FEHLERSUCHE UND REPARATUR

7.1 SICHERHEITSMASSNAHMEN

(siehe Teil I, SPM-15/PS-15)

7.2 LAGE DER BAUGRUPPEN, ABGLEICHELEMENTE, TESTPUNKTE

Eine Liste der Baugruppen ist in Kapitel 7.7.1 Bild 7.7-2 zu finden.

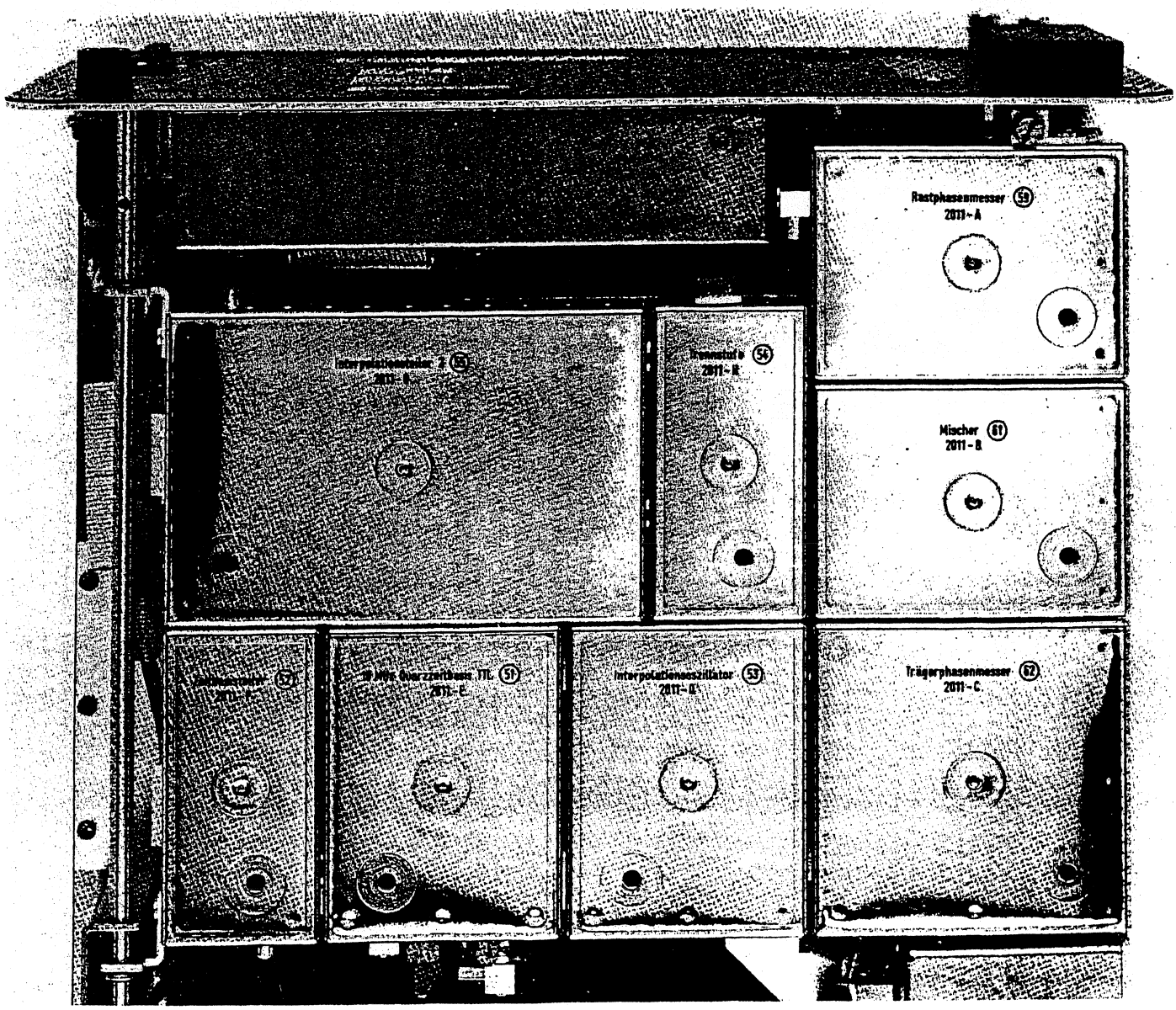

Bild 7.2-1 OD-15, äußerer Teil, mit Deckel

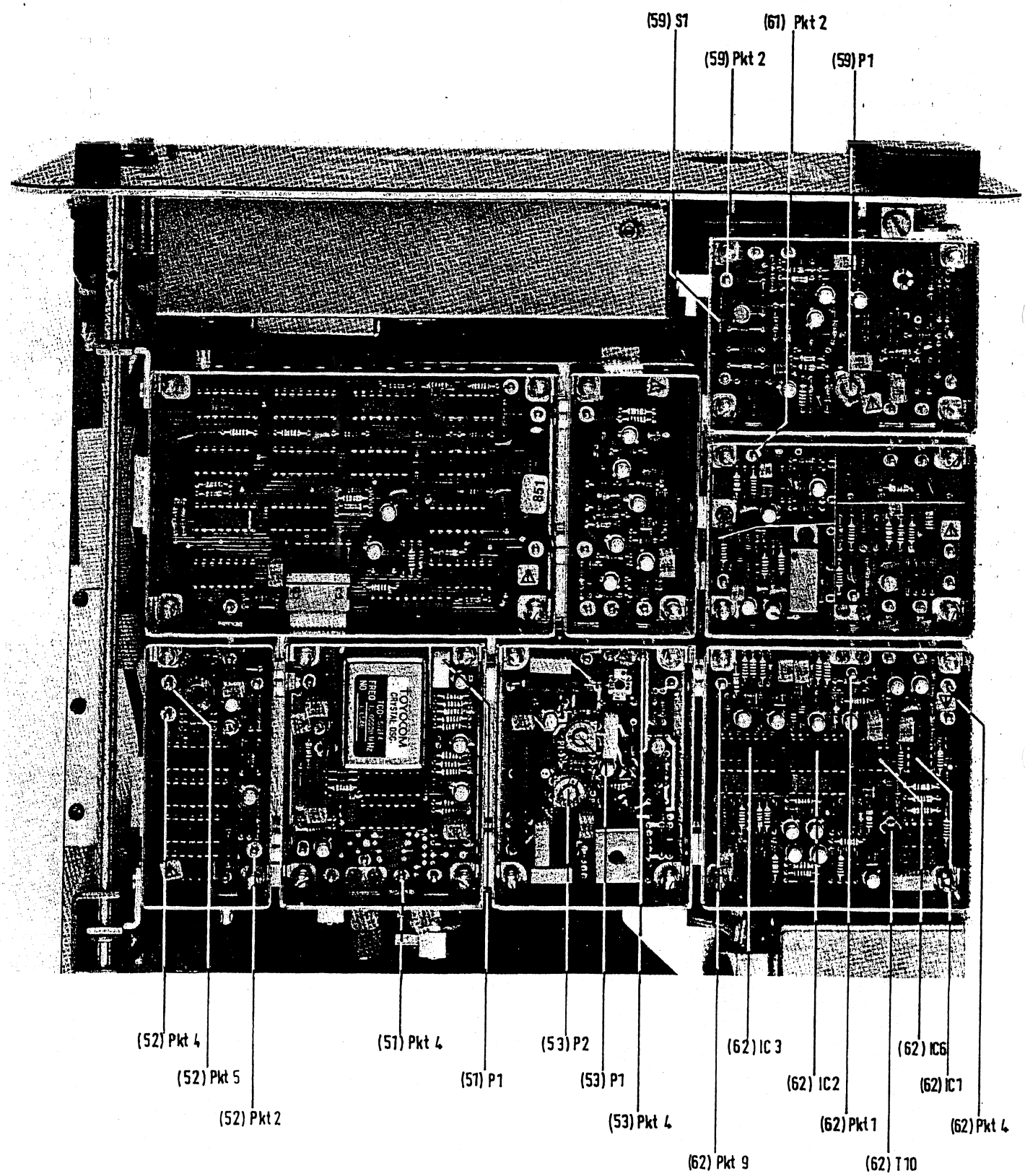

Bild 7.2-2 OD-15, äußerer Teil, ohne Deckel

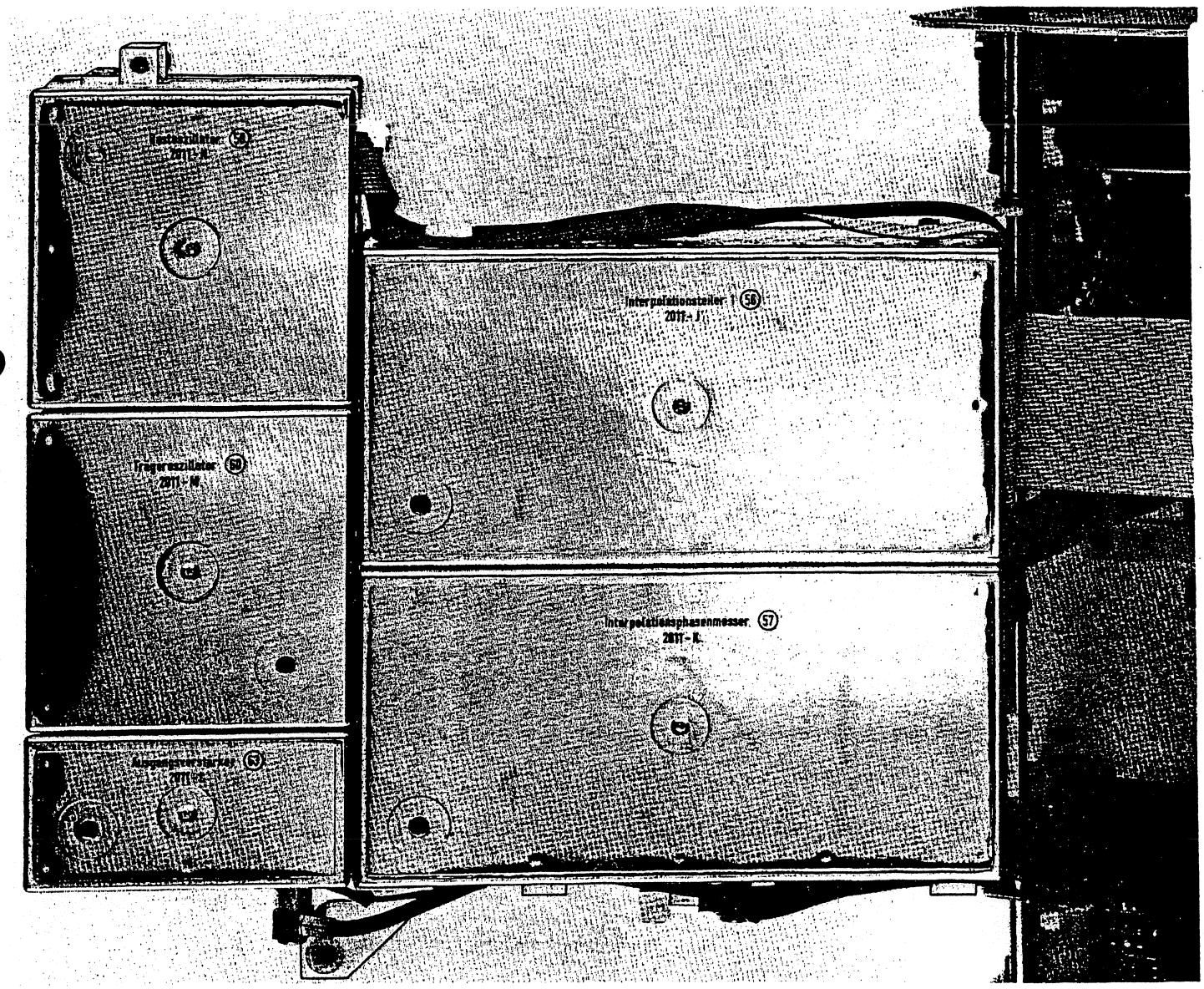

Bild 7.2-3 OD-15, innerer Teil, mit Deckel

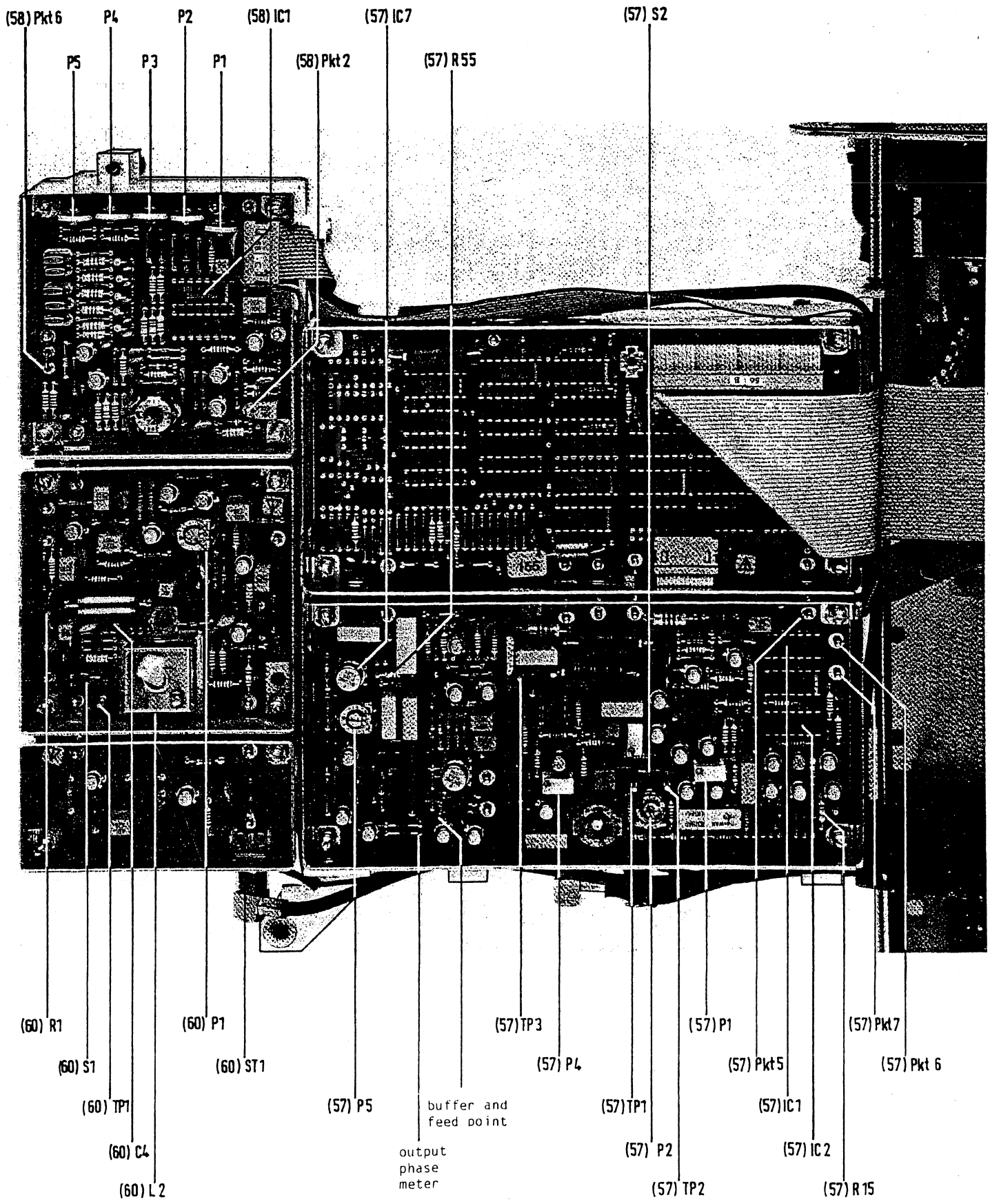

Bild 7.2-4 OD-15, innerer Teil, ohne Deckel

7.3 TROUBLESHOOTING

7.3.1 FAULT LOCATION

The OD-15 provides a carrier signal of fixed level, the frequency of which depends on the frequency setting of the SPM-15 and the PS-15.

The frequencies are related as follows:

$f_c = f_s + 40$ MHz

where f_c = carrier frequency 40.0 MHz to 49.999999 MHz

f_s = set frequency 0 MHz to 9.999999 MHz

The level is fixed at -15 dB into 75 Ω.

There are no other ways in which the frequency is dependent on other instrument settings. If the above relationships are not present, the fault lies either

- in the control circuits: see 7.4
- or in the OD-15 itself: see 7.5 and 7.6.

7.4 TROUBLESHOOTING THE CONTROL CIRCUITS

A stimulus program is provided in the SPM-15/PS-15 software for testing the synthesiser control circuits (socket b/c on the CPU board).

The stimulus program is described in part 1 (SPM-15/PS-15) in the section on checking the CPU.

For details of troubleshooting procedures, see section 7.4.1.9 (program controlled synthesiser stimulus) in part 1.

The complete CPU should be checked if an error is found.
Information on signature analysis is found in section 7.4.1.3 of part 1.

7.5 TROUBLESHOOTING THE OD-15 SYNTHESISER

7.5.1 PROCEDURE

It is assumed that the control circuits are functioning correctly (see 7.4).

The OD-15 can be split up into functional groups, making a systematic troubleshooting procedure easier. Section 7.5.2 describes a good/bad check for the individual modules. We recommend that the tests be carried out in the order given. Section 7.5.2 is divided up as follows:

a) power supply check
b) timebase check
c) interpolation section check
d) locking section check
e) carrier circuit check

Details of how to troubleshoot the various control loops are given in section 7.5.3, which is divided as follows:

- troubleshooting the interpolation loop 7.5.3.1
- troubleshooting the locking loop 7.5.3.2
- troubleshooting the carrier loop 7.5.3.3

Figures 7.5-2 and 7.5-3 show the individual signal conditions for correct operation.

7.5.2 CHECKING THE MODULES

a) Supply voltage check

Measure the voltages present at the following connectors (reference ground):

(56) b pin 16: +5 V	(58) c pins 1, 2, 14: +5 V	(51) pin 4: +5 V
b pin 19: +12 V	c pins 9, 10: +12 V	
b pin 20: -12 V	c pins 11, 12: -12 V	

If there is an error, check that the mains power unit is working properly and check if the load on the power supply unit is too high.

b) Timebase check

1 MHz at (52) pin 2
at (59) pin 2
10 kHz at (52) pin 4 / (57) pin 7
at (52) pin 5 / (57) pin 6

good	bad
——	-> troubleshoot modules (51) and (52)

c) Interpolation section check

SPM/PS setting:	f at 62 pin 9
0 to 1.999999 MHz	4 MHz to 5.999999 MHz

Check at the following frequencies:

n x 111111 Hz	4 MHz + (n x 111111 Hz)
1 MHz + n x 111111 Hz	5 MHz + (n x 111111 Hz)

n = 0 to 9

good	bad
——	-> troubleshoot interpolation section (modules 53 to 57)

d) Check locking section

SPM/PS setting:	f at 61 pin 2	V at 62 pin 4
1/3/5/7/9 MHz	36/38/40/42/44 MHz	0/1/2/3/4 V

good	bad
——	-> troubleshoot locking section (modules 58 and 59)

e) Check carrier circuits

It is assumed that the interpolation section and the locking section are functioning correctly.

SPM/PS setting	f at 63 ST 1
0 to 9.999999 MHz	40 MHz to 49.999999 MHz

Check at the following frequencies:

n x 1.111111 MHz	40 MHz + n x 1.111111 MHz

n = 0 to 9

good	bad
——	-> troubleshoot carrier circuit and output amplifier (modules 60 to 63)

7.5.3 TROUBLESHOOTING THE INDIVIDUAL FUNCTIONAL GROUPS

7.5.3.1 Troubleshooting the interpolation loop (53) to (59)

Is there a systematic error between the set and measured values of the frequency with respect to a particular digit and its value?

no	yes
——	Error is in the control signal processing in the interpolation divider 1 or 2 -> see table of settings, figure 7.5-3

Open the control loop in the interpolation phase meter circuit: disconnect b from 57 R 65 and feed a d.c. voltage between -4 and +4 V into b.

Does the interpolation oscillator and the complete divider chain as far as the interpolation divider 1 track the control voltage?

Relationships: Series A +4 V -> 6 MHz Series B +3 V -> 6 MHz
-4 V -> 4 MHz -3 V -> 4 MHz

yes	no
——	Fault is in the divider chain or the oscillator

Does the output of the phase meter circuit react in the opposite sense to the control voltage?

yes — no

—

Does the digital section of the phase meter respond to the control signal?
Relationships:

f > 10 kHz — 57 IC 1/4 pin 11 -> LOW
f < 10 kHz — 57 IC 2/4 pin 11 -> LOW

(f is the input signal frequency at (57) pin 5)

yes — no

Fault is in analog section of the phase meter	Fault is in digital section of the phase meter

Check the switching between the time constants in the phase meter.
Signals at 57 TP 3 as shown in figure 7.5-2.

7.5.3.2 Troubleshooting the locking loop (58), (59)

Control check

SPM/PS setting	Selected frequency f_n	IC 1 pin 2	4	6	10	12
1 MHz	36 MHz	L	H	H	H	H
3 MHz	38 MHz	H	L	H	H	H
5 MHz	40 MHz	H	H	L	H	H
7 MHz	42 MHz	H	H	H	L	H
9 MHz	44 MHz	H	H	H	H	L

good — bad

—— -> troubleshoot the control section

Control loop function check

Open the control loop by removing wire link 58 a-b.

The selected crystal will freely oscillate.

Connect a voltage source of range ± 12 V (referred to ground) to 58 pin b.

58 pin b	frequency at 58 pin 2	Voltage at 58 pin a
+12 V ↓ -12 V	f_n + 400 to 800 Hz ↓ f_n - 400 to 1500 Hz	-12 V +12 V

good	bad
—	58 pin 2 bad: troubleshoot the oscillator (58) 58 pin b bad: troubleshoot the locking phase meter (59)

Check the pulling range function

Proceed as outlined in 7.7.11

7.5.3.3 Troubleshooting the carrier loop (60) to (63)

Check: Interpolation frequency at 62 pin 9 correct?
Locking frequency at 61 pin 2 correct?
f_R d.c. voltage at 62 pin 4 correct?
"PD block" input signal at 62 pins c6, c8 at LOW?

Open the carrier oscillator control loop
Set 60 S1 to T and feed in signal via 60 TP 1
Also disable the comparators in the carrier phase meter:
Ground pin 1 of 62 IC 1/1
Feed +1 V into pin 3 of 62 IC 6/2

Check: does the carrier oscillator and the output amplifier and mixer track the input signal?
Relationship: 0 V 40 MHz
5 V 50 MHz

Does the output of the phase meter respond in the opposite sense to the control voltage?

yes	no
—	Does the digital section of the phase meter respond to the control voltage? Relationships: $f > f_{int}$ 62 IC 2/4 pin 3 -> HIGH $f < f_{int}$ 62 IC 3/4 pin 3 -> HIGH (f is the frequency of the input signal at (62) pin 1)

yes	no
—	Fault is in digital section of the phase meter

Check the control of the "switch" 62 T 10
Gate voltage = 0 V, -> switch ON

7.5.3.4 Signals

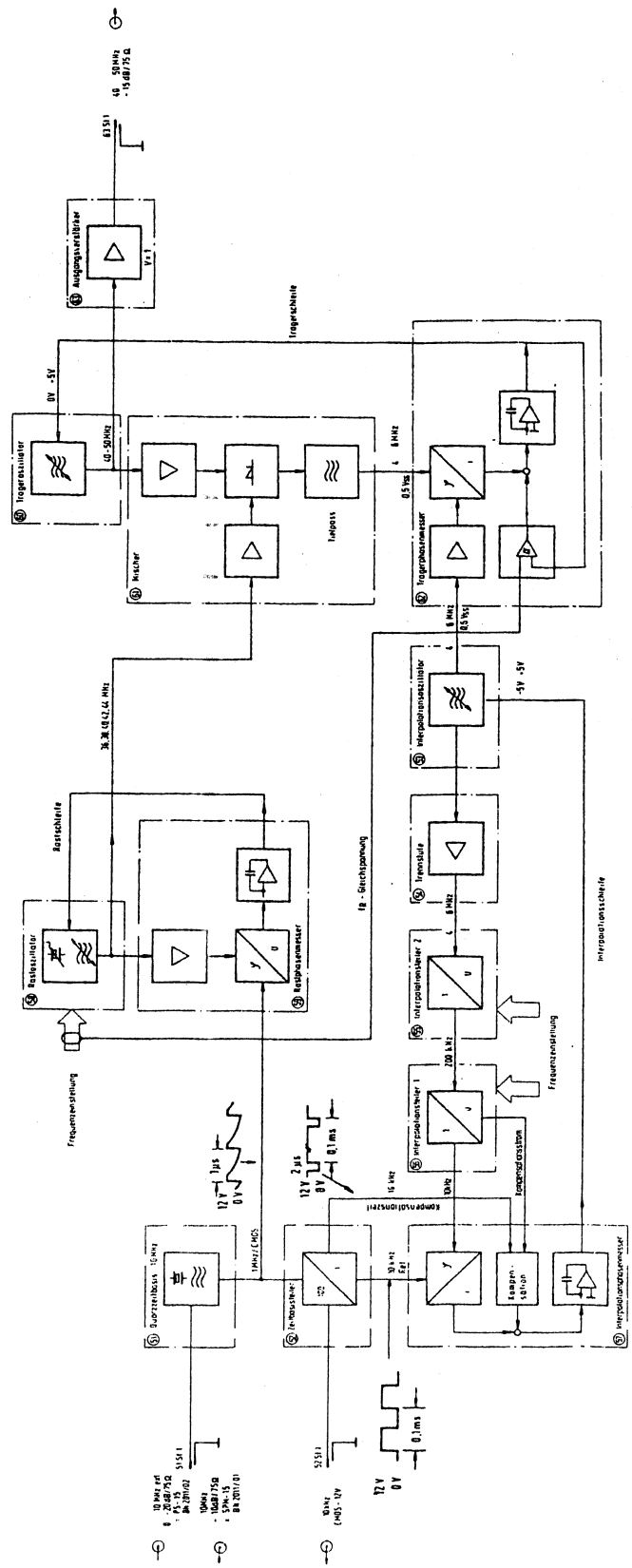

Figure 7.5-1 OD-15 block diagram

Signal source	Signal shape	Conditions
Interpolation oscillator, output 5	0.6 V_{pk-pk} sinewave mid point at 1.4 V	dependent on f setting
Buffer stage, output 5	3-4 V / 0 V	dependent on f setting
Locking oscillator, output 2	0.6 V_{pk} sinewave mid point at 0 V	dependent on f setting
Carrier oscillator, output 2	0.3 V_{pk} sinewave mid point at 4.5 V	dependent on f setting
57 TP 3	+1.5 V / 0 V / -1.5 V 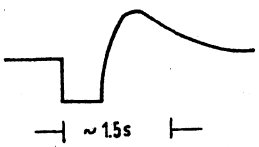	f = 0 MHz -> 2.0 MHz
		f = 2.0 MHz -> 0 MHz

Figure 7.5-2 OD-15 signal shapes

Setting table for the bit rate multiplier in interpolation divider 1/2

signal activity at	for setting of					
	u x 1 Hz	u x 10 Hz	u x 100 Hz	u x 1 kHz	u x 10 kHz	u x 100 kHz
56 IC 23/1 pin 1	x					
56 IC 16/3 pin 12	x					
56 IC 20/2 pin 13		x				
56 IC 2/3 pin 8/2	x	x				
56 IC 20/1 pin 1			x			
56 IC 2/2 pin 11/12	x	x	x			
56 IC 5/2 pin 13				x		
56 IC 2/1 pin 4/5	x	x	x	x		
56 IC 5/1 pin 1					x	
56 IC 1/1 pin 9	x	x	x	x	x	
55 IC 9 pin 13						x

Figure 7.5-3 Setting table for interpolation divider 1/2

7.6 FURTHER TROUBLESHOOTING

7.6.1 EXTERNAL CONTROL

There are two versions of the OD-15, which differ in their crystal timebases and the possibility of external control.

BN	Type of control	Used in
2011/01	controlling	SPM-15
2011/02	controlled	PS-15

As well as the signals detailed in 7.5, the following signals must also be present in the crystal timebase (circuit diagram 51) for correct operation.

Crystal timebase, BN 2011/01 (board [2011-P]):

Signal source	Signal shape	Requirements
output 5	0.6 V_{pk} sinewave mid point at 0 V f = 10 MHz	none
output 3	TTL/f = 10 MHz	none

Crystal timebase, BN 2011/02 (board [2011-E]):
An external control signal (f = 10 MHz, 0 dB, 75 Ω) input to input 3 switches the internal oscillator Q1 off (voltage across R8 = 0 V) and determines the signal at the output pin 6/1/5.

7.7 ADJUSTMENT PROCEDURE

7.7.1 OVERVIEW

List of adjustment components:

Trimmer	Adjustment	Section
51 P 1	Absolute frequency, crystal timebase	7.7.2
53 P 1	Interpolation signal amplitude	7.7.3
53 P 2	Interpolation oscillator setting range	7.7.4
57 P 5	Offset voltage, 57 IC 7	7.7.5
57 P 4	Offset voltage, 57 IC 6	7.7.6
57 P 2	Frequency weighting	7.7.7
57 P 1	Phase slope	7.7.8
57 P 3	Subharmonic compensation	7.7.9
59 P 1	Offset voltage, 59 IC 1	7.7.10
58 P 1 - P 5	Pulling range, locking oscillator	7.7.11
60 L 2	Carrier oscillator setting range	7.7.12
60 P 1	Carrier signal amplitude	7.7.13

Figure 7.7-1 List of all adjustment components

Adjustments to be made after replacing modules:

Module	Series	Name	Shown in circuit diagram no.	Adjustment and check as in
2011-A		Locking phase meter	59	7.7.10
2011-B		Mixer	61	
2011-C		Carrier phase meter	62	
2011-D	A	Interpolation osc.	53	7.7.3,
2011-D1	B...			7.7.4, 7.7.8,
				7.7.7,7.7.9,
2011-E		PS-15 crystal timebase	51	7.7.2
2011-F		Timebase divider	52	
2011-G		Interpolation divider 2	55	
2011-H		Buffer stage	54	
2011-J		Interpolation divider 1	56	
2011-K	A	Interpolation phase	57	7.7.5
2011-K1	B...	meter		7.7.6, 7.7.8,
				7.7.7, 7.7.9
2011-L		Output amplifier	63	
2011-M		Carrier oscillator	60	7.7.12, 7.7.13
2011-N		Locking oscillator	58	7.7.11
2011-P		SPM-15 crystal timebase	51	7.7.2

Figure 7.7-2 Adjustments after replacing modules

7.7.2 ABSOLUTE FREQUENCY, CRYSTAL TIMEBASE (51 P 1)

Setting: 9.999999 MHz
Measure: Carrier signal frequency
Output (63) pin 3
Nominal value 59.999999 MHz

7.7.3 INTERPOLATION SIGNAL AMPLITUDE

Frequency setting: any
Measure: Output signal amplitude at (53) pin 4
using oscilloscope
Nominal value V_{pk-pk} = 2.4 V

7.7.4 INTERPOLATION OSCILLATOR SETTING RANGE (53 P 2)

Frequency setting: 1 MHz
Measure: control voltage to oscillator, connection b of 57 R 65
using DVM
Nominal value = 0 V $\pm$ 50 mV (note: long time constant)

7.7.5 OFFSET VOLTAGE, 57 IC 7 (57 P 5)

Preliminary setting: open S 2

Measure: voltage on 57 IC 7 pin 6/57 R 55 using a DVM

Nominal value: 0 V ± 100 mV, no drift (the test point should be earthed briefly prior to measuring)

7.7.6 OFFSET VOLTAGE, 57 IC 6 (57 P 4)

Preliminary setting: open S 2

make adjustment 7.7.5

Measure: voltage at 57 TP 3 using a DVM

Nominal value: 0 V ± 3 mV

7.7.7 FREQUENCY WEIGHTING (57 P 2)

Preliminary setting: close S 2

set frequency to 0 MHz

measure the voltage at 57 TP 1 with a DVM, V_o = (e.g.) -1,402 V

set frequency to 1.999999 MHz

measure the voltage at 57 TP 1, V_2 = (e.g.) +1,363 V

calculate the adjustment value:

$V^* = 3\ V_o - 2\ V_2$

e.g. = 3 x -1.402 V - 2 x 1.363 V = -6.932 V

Measure: voltage at 57 TP 2

Nominal value V^* ± 5 mV

7.7.8 PHASE SLOPE (57 P 1)

Preliminary setting: set frequency to 0 MHz

measure V_a at 57 R 65 connector b using a DVM

e.g. V_a = -4.08 V

set frequency to 1.999999 MHz

measure V_b at 57 R 65, e.g. V_b = +4.20 V

calculate the adjustment value $V^{**} = 0.42\ (V_b - V_a)$

e.g. $V^{**} = 0.42 \times (4.20\ V - (-4.08\ V)) = 3.48\ V$

Measure: voltage across 57 R 15

at 1.999999 MHz

Nominal value: V^{**} ± 3 mV

7.7.9 SUBHARMONIC COMPENSATION (57 P 3)

Frequency setting: 20 Hz

Measure: signal at 57 TP 3 using an oscilloscope

Nominal conditions: adjust for minimum level of the 20 Hz noise signal

7.7.10 OFFSET VOLTAGE 59 IC 1 (59 P 1)

Preliminary setting: connect pin 3 of 59 IC 1 to ground
Measure: voltage at the output (59) pin 5 using a DVM.
Nominal value: alternates between +12 and -12 V

7.7.11 PULLING RANGE, LOCKING OSCILLATOR (58 P 1 to 58 P 5)

Preliminary setting: open 59 S 1 and input an external sync. signal (from PS-15) with f = 1 MHz, settable in 1 Hz steps (level +10 dB into 75 Ω)
Measure: voltage at wire link 58 a-b using an oscilloscope
Required behaviour: when the sync. signal frequency is changed, the control voltage to be measured changes within the range ± 12 V. At the limits of the control range, spikes of amplitude 24 V should be observed with no intermediate forms.

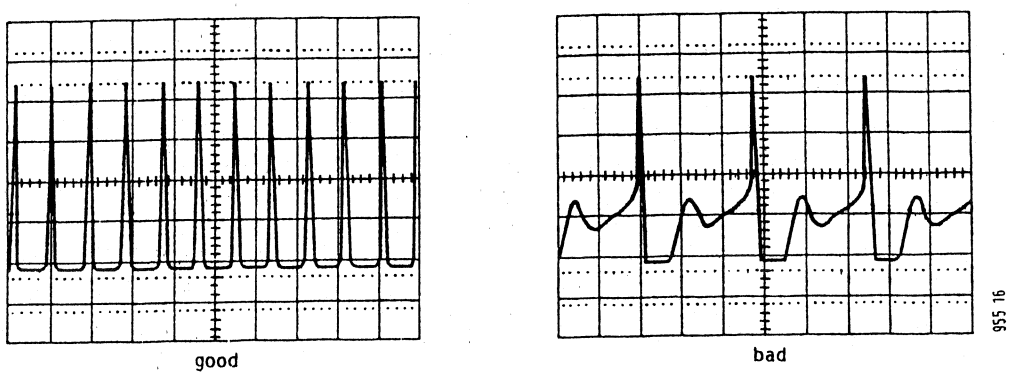

Figure 7.7-3 Control voltage, locking oscillator

The setting range for the sync. signal should be 1 MHz ± ≥ 15 Hz before the spikes appear. This should be set for all the crystals using the appropriate potentiometer. A shift and match of all adjustment ranges can be carried out with the core of 58 O 1, but this requires that the adjustment be rechecked for all the crystals.

7.7.12 CARRIER OSCILLATOR SETTING RANGE (60 L 2)

- Setting linearity

  Preliminary setting: set frequency to 0 MHz
  Measure: the setting voltage at 60 S 1. It should be between 0.2 and 0.5 V. This should be set using the core of 60 L 2.
  Across the entire range from 0 to 10 MHz, a slope of 2 MHz/V should be achievable for the relationship frequency to setting voltage.

60 C 4 should be increased in value if the slope is degressive (15 pF, 18 pF)

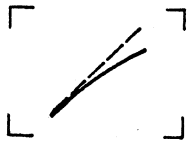

60 C 4 should be decreased in value if the slope is progressive (10 pF, 8.2 pF)

- Absolute position of the setting

Using the core of 60 L 2 set the setting voltage to 0.52 V at a frequency f = 0 MHz
If neccessary, 60 R 1 can be changed to match the setting range:
R 1 smaller -> setting voltage bigger
R 1 bigger -> setting voltage smaller
Sensitivity: 530 Ω/0.1 V

7.7.13 CARRIER SIGNAL AMPLITUDE (60 P 1)

Frequency setting: any
Measure: output signal amplitude at 63 R 3 using an oscilloscope
Nominal value: V_{pk-pk} = 0.8 V

8 SPECIFICATION CHECK

The OD-15 for the SPM-15 has two outputs:

10 MHz standard frequency to [33] = 51 Bu 3

Carrier frequency 40 to 50 MHz to [34] = 11 Bu 1

The frequency accuracy and level tolerances can be easily checked:

[33]: 10 MHz $\pm$ 10 Hz, 0 dBm/75 Ω $\pm$ 2 dB

[34]: 40 MHz $\pm$ 40 Hz when tuned to 0 Hz

49.999999 MHz $\pm$ 50 Hz when tuned to 9999.999 kHz

40 to 50 MHz: -6 dBm/75 Ω $\pm$ 2 dB

equivalent to V_{pk-pk} of 4 V $\pm$ 0.5 V into a 75 Ω termination

The OD-15 for the PS-15 does not have any external outputs. The frequency accuracy is determined at the same time as that of the PS-15, see section 8 of PS-15 service manual.

9 CIRCUIT DESCRIPTION AND FUNCTION

9.1 INSTRUMENT FUNCTION

The OD-15 decade control oscillator is a subassembly which is fitted to the SPM-15 and PS-15. It generates the carrier frequency signal, which is sinusoidal and has a level of -15 dB into 75 Ω and a frequency range of 40 to 50 MHz.

There are four main groups in the instrument:

1. Standard frequency generator and processor
2. Locking loop
3. Interpolation loop
4. Carrier loop

9.1.1 STANDARD FREQUENCY GENERATOR AND PROCESSOR

The quartz controlled timebase (51) generates the 10 MHz standard frequency and a 1 MHz reference frequency for the locking phase meter (59) and the timebase divider (52). The timebase divider provides a 10 kHz reference for the interpolation phase meter.

An externally generated standard frequency can be used instead of the internal oscillator for version BN 2011/02 if required.

9.1.2 LOCKING LOOP

The locking oscillator (58) provides one of five fixed frequencies, 36, 38, 40, 42 or 44 MHz, depending on the instrument setting. Together with the interpolation frequency, they form the actual carrier frequency. The locking phase meter (58) regulates the set frequency by means of the 1 MHz reference frequency.

9.1.3 INTERPOLATION LOOP

The interpolation oscillator (53) can be set between 4 and 6.1 MHz with the aid of the interpolation dividers 1 (56) and 2 (55). It is regulated via the interpolation phase meter (57). The oscillator and the dividers are isolated from each other by the buffer stage. The interpolation frequency is fed to the carrier phase meter (62) as a comparison frequency. To improve the tuning characteristics of both the transmitter and the receiver, the interpolation exchange occurs at 6.1 MHz when the frequency is increased and at 4.0 MHz when the frequency is decreased. This results in a tuning hysteresis of 100 kHz.

9.1.4 CARRIER LOOP

The carrier oscillator (60) delivers a carrier signal of frequency 40 to 50 MHz. This is converted with the locking frequency in the mixer (61). The product is compared with the interpolation frequency in the carrier phase meter (62), and the carrier oscillator is controlled on the basis of this comparison. The output amplifier (63) produces a carrier signal at -15 dB into 75 Ω.

9.2 CIRCUIT DESCRIPTIONS: MODULES AND OPTIONS

9.2.1 10 MHZ QUARTZ CONTROLLED TIMEBASE TTL (51)

9.2.1.1 10 MHz quartz controlled timebase TTL for SPM-15 [2011-P]

The standard frequency of 10 MHz is generated by crystal Q1 and divided down to 1 MHz by IC 2. The 10 MHz standard frequency is passed to the output via T 2 and Ol. Output level is -10 dB/75 Ω.

9.2.1.2 10 MHz quartz controlled timebase TTL for PS-15 [2011-E]

The standard frequency of 10 MHz is generated by crystal Q1 and divided down to 1 MHz by IC 4. If an external source is used for the standard frequency (0 to -20 dB), the internal source is disabled via T 5, and T 1. T 2, T 3 and T 4 serve to amplify and condition the input signal.

9.2.2 TIMEBASE DIVIDER (52) [2011-F]

The divider serves to divide the 1 MHz reference frequency down to 10 kHz and provide this output at various duty cycles. Counters IC 1/1 and IC 1/2 divide the 1 MHz signal from pkt. 2 down to 10 kHz (pin 5, IC 1); flip flops IC 2/1 through to 2/4 act as pulse shapers. The monostable IC 4 sets the duty cycle to 1:1 (50%) and T 1 to T 3 condition and buffer the pulses.

9.2.3 INTERPOLATION OSCILLATOR (53) [2011-D, D1]

The interpolation oscillator, which is a Meissner circuit with differential stage, has a frequency range of 4 to 6.1 MHz. Varicap diodes Gl 1 and 2 (from series B: Gl 1, 2, 5 and 6) are reverse biassed via pkt. 3 and P2 and form with the primary of transformer Ol the resonant circuit which determines the oscillator frequency. The frequency is set with the aid of the control voltage present at pkt. 1. Part of the primary-side a.c. voltage is tapped off on the secondary side, amplified by T 1 and T 2 and then fed back. The output signal is rectified by diodes Gl 3 and Gl 4. The resultant d.c. voltage is used to control the amplitude of the output signal via T 4. T 3 and T 5 amplify and buffer the output signal.

9.2.4 BUFFER STAGE (54) [2011-H]

The buffer stage is used to decouple the interpolation divider 2 from the interpolation oscillator and to generate steep negative-going edges. T 1, T 2 and T 3 are buffers, T 4 drives the switching transistor T 5.

9.2.5 INTERPOLATION DIVIDER 2 (55) [2011-G]

The interpolation divider circuit 2 is explained with the help of the detailed block diagram, figure 9.2-5.

Circuit diagrams and corresponding components:

1. Pulse blanking circuit 1		IC 1, IC 5/1, IC 14
2. Pulse blanking circuit 2		IC 2, IC 5/2
Switchable divider 4/5:1		IC 3/1 to IC 4
Fixed divider 5:1	bit rate	IC 10/1 to IC 11/1
Fixed divider 2:1	bit rate	IC 11/2
Selector for BCD control	multiplier	IC 8/1, IC 8/2, IC 7/1, IC 7/2 IC 9

Main function of the pulse blanking circuit:

In the passive state, the input signal (pin 1, 55 IC 1) is passed unchanged to the output (pin 3, 55 IC 5). When active (triggered by a single edge on pin 13, IC 1), one cycle is blanked out of the input signal.

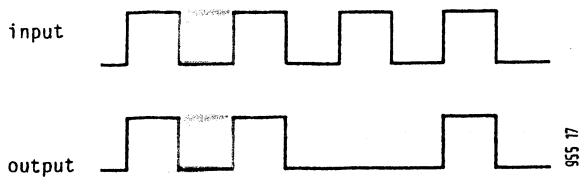

Figure 9.2-1 Pulse blanking circuit signals

Function of the interpolation divider 2 within the interpolation loop:
A 10 kHz signal is produced from the 4 to 6.1 MHz interpolation frequency according to a fixed relationship. This signal is compared with a 10 kHz reference.

The fixed relationship is dependent on the synthesiser control signal only. Once in equilibrium, the interpolation frequency, all intermediate signals and the 10 kHz signal are constant, due to the action of the regulating loop.

Intermediate signal frequencies:

Pulse blanking circuit 1 output	4/5 MHz + u x 100 kHz u = 0, ... , 9	dependent on drive signal
Pulse blanking circuit 2 output	4/5 MHz	
Switchable divider 4/5:1 output	1 MHz	
Interpolation divider 2 output	200 kHz	

Function of the bit rate multiplier in interpolation divider 2:
The following relationship exists between the input and output signals of the bit rate multiplier:

$$f_o = \frac{M1}{10} \times f_i = \frac{M1}{10} \times 1\ MHz$$

$$= M1 \times 100\ kHz, \text{ where } M1 = 0 \text{ to } 9$$

f_o = output frequency (pin 13, IC 9)
f_i = input frequency (pin 3, IC 10)
M1 = control signal (pins 4, 6, 11, 13, 14, IC 6).

The output from the bit rate multiplier acts as a harmonic blanking signal for the pulse blanking circuit 2. One cycle of the incoming signal is blanked each time a harmonic blanking pulse is received.

Example:

Total modulation	100 kHz
=> interpolation frequency	4.1 MHz
Pulse blanking circuit 1 passive	
Bit rate multiplier control	M1 = 1
=> pulse blanking circuit 2 control	= 100 kHz

The bit rate multiplier and the pulse blanking circuit therefore influence the interpolation frequency as follows:
100 000 pulses/s (≙ 100 kHz) are blanked out of the incoming signal (4.1 MHz ≙ 4 100 000 pulses/s) leaving a signal with 4 000 000 pulses/s (4 MHz).

9.2.6 INTERPOLATION DIVIDER 1 (56) [2011-J]

The interpolation divider circuit 1 is explained with the help of the detailed block diagram, figure 9.2-5. Three functional groups can be distinguished:

Fixed divider 20:1	IC 12, IC 15/1
Subharmonic blanking pulse generation	IC 19/3, IC 19/4, IC 21/3, IC 23/1, IC 23/2, IC 22, IC 17/2 IC 16/4 and related components
Analog phase sweep interference compensation signal generation	Gl 1 to Gl 13, R2 to R9

20:1 divider function:

In the steady state, the output signal from the interpolation divder 2 is 200 kHz. A 10 kHz signal ($\overline{\text{data exchange}}$) is produced from this by division and used as the reference frequency which is fed to the interpolation phase meter.

Subharmonic blanking pulse generation function:

The heart of this group is a bit rate multiplier circuit which is used more than once. The circuit is described in 9.2.5. The input frequency is 10 kHz, this signal being composed from signals drawn from the synchronisation bus (figures 9.2-3 and 9.2-4).
The output signal (pin 3, IC 16 and associated components) has a frequency of M x 1 kHz, where M = 0 to 9, determined by the control signal. Through recursive use of the 10:1 divider it is possible to modify the effect of the bit rate multiplier for the individual digits.

1 Hz digit:

$$f_o = \frac{M6}{10^4} \times f_i = \frac{M6}{10^4} \times 10\ \text{kHz}$$

$$= M6 \times 1\ \text{Hz}$$

The output signal from the complete pulse generation (pin 9, IC 1) is fed to the interpolation divider 2 as a subharmonic blanking pulse from the pulse blanking circuit 1. It results in the reduction of the 1st intermediate signal to an integer multiple of 100 kHz.

Pulses which result from the 10 kHz control signal are evidently also harmonics.

Subharmonic compensation circuit function:

When the 1 Hz - 1 kHz digits are triggered, i.e. when real subharmonic blanking pulses are present, the interpolation phase meter registers a deviation of the actual signal from the nominal signal as shown in figure 9.2-2.

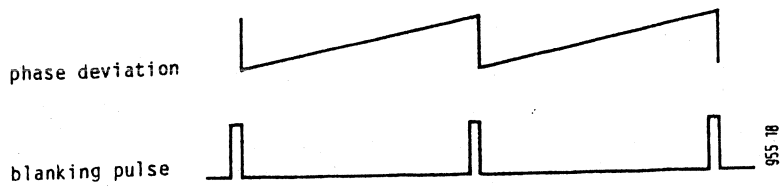

Figure 9.2-2 Subharmonic blanking pulses

The same ramp appears at the counter outputs (Q_1 - Q_3) of the 10:1 divider so that, after D/A conversion, the signal can be used to correct the incorrect phase sweep in the interpolation phase meter.

Synchronisation bus signals:

- Gate circuit for processing the control signal

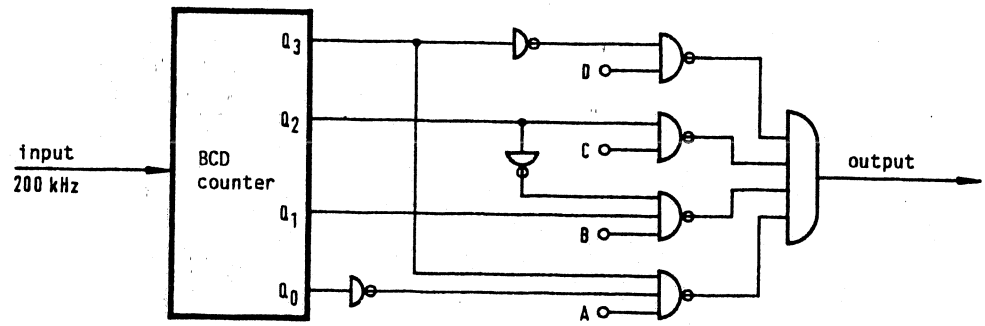

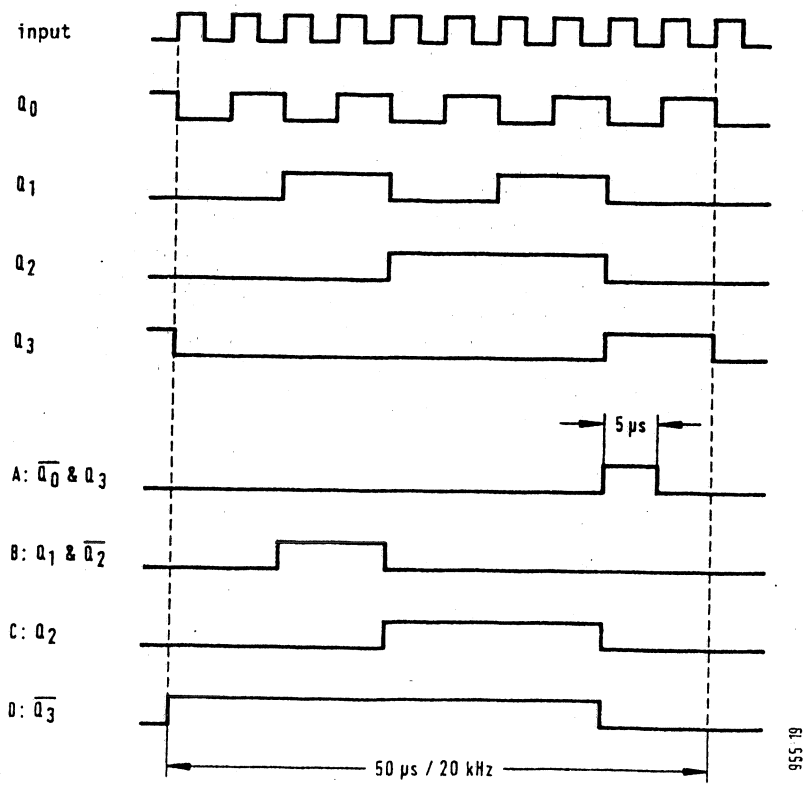

Figure 9.2-3 Control signal processing, interpolation divider 1

10:1 divider control (56 IC 8, 14, 18, 22)

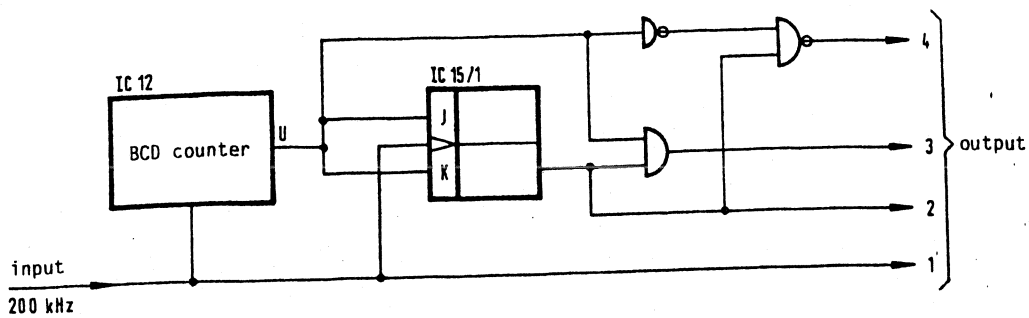

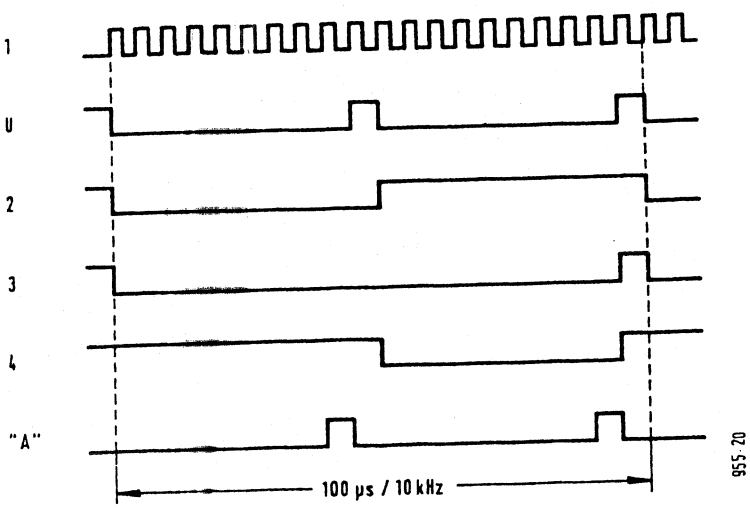

Figure 9.2-4 10:1 divider control

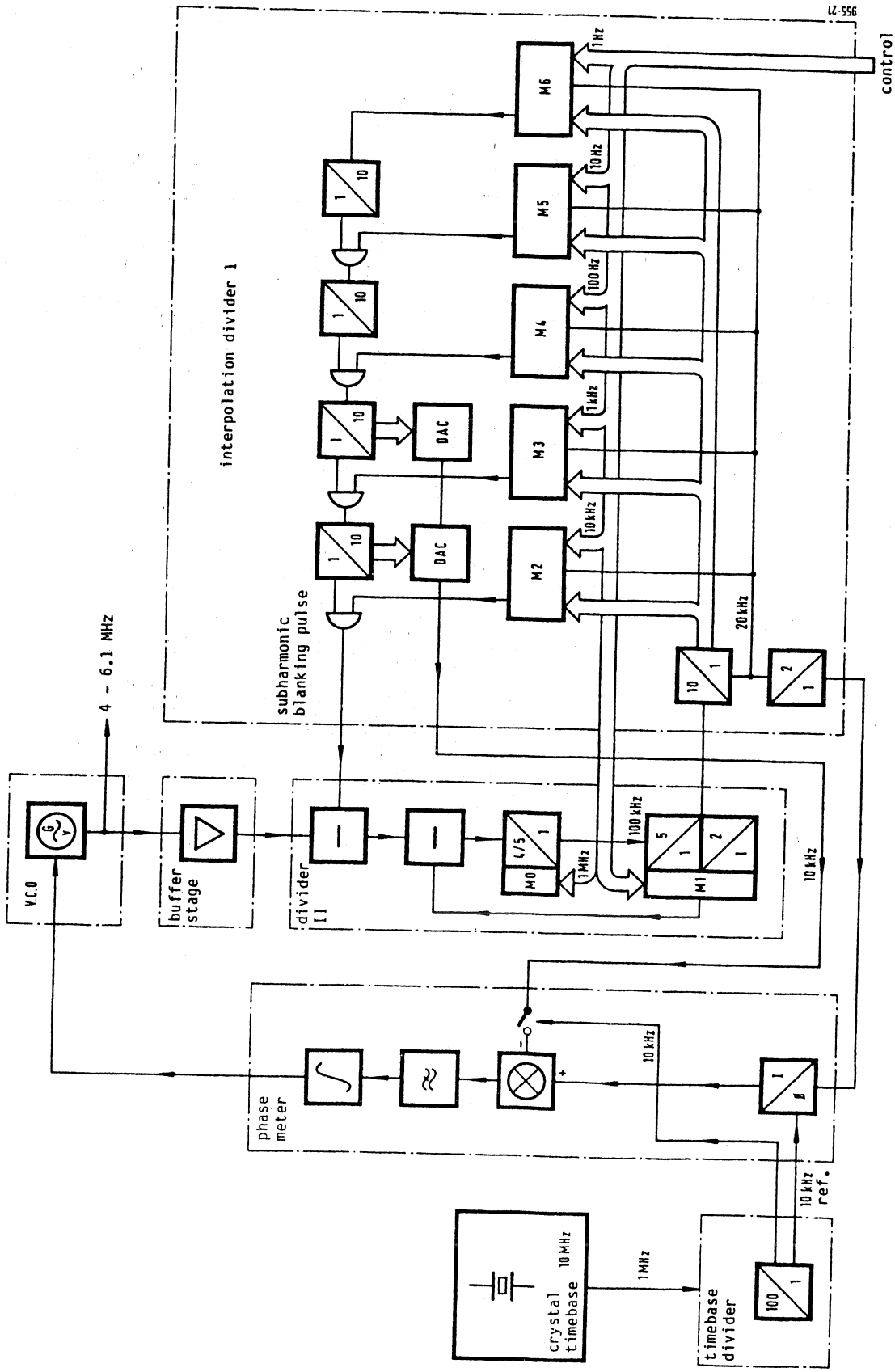

Figure 9.2-5 OD-15 block diagram

9.2.7 INTERPOLATION PHASE METER (57) [2011-K, K1]

Figure 9.2-6 shows the main functional groups of the interpolation phase meter.
The digital phase meter is a commonly used circuit, which is described, for example, in the application notes for Motorola IC type MC 4044.

The constant current stage which follows the digital phase meter eliminates the effects of variations in operating voltage and the output tolerance of the phase meter. This also makes it possible to make the characteristics of the constant current stage dependent on the set frequency. This is necessary, since different dividers are used for different frequencies, and this would lead to a variation in the loop gain if the gain of the constant current stage were fixed.

A further stage adds a compensation current (proportional to the control signal of interpolation divider 1) to the phase signal.

A 10 kHz stop band filter is used to suppress the 10 kHz instrinsic noise signal of the phase meter itself.

The signal path to the carrier oscillator must fulfil two contradictory requirements:
- high attenuation at low frequencies (carrier sidebands),
- rapid response to new settings.

This problem has been solved by splitting the signal path. The upper fast path (IC 6) is provided with a threshold circuit which is high impedance in the steady state. The lower slow path (IC 7) is always active, but is bypassed by the upper path during reprogramming.

The integrator in the control loop (IC 8) has both a constant current and a limiter stage.

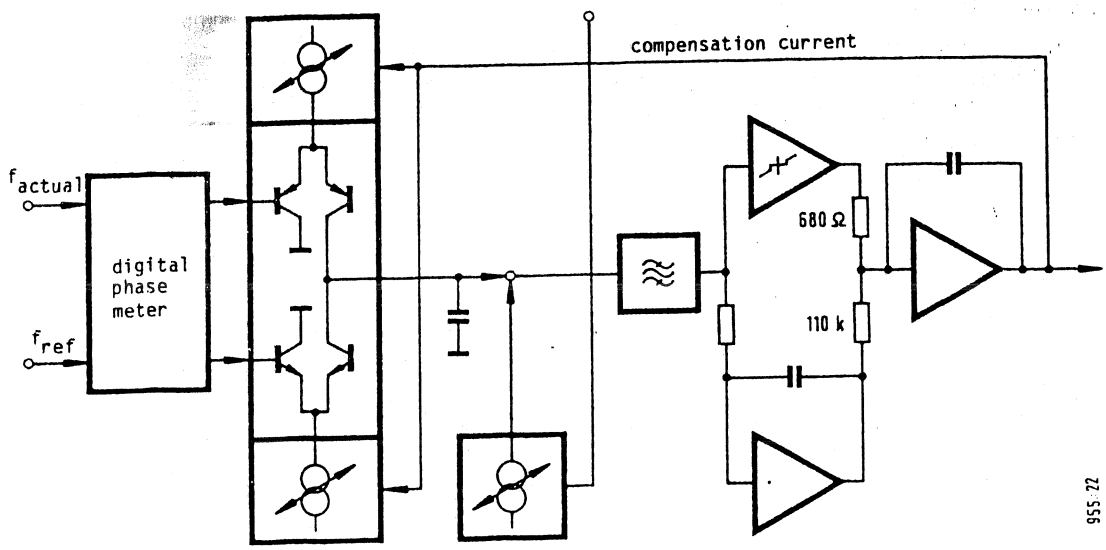

Figure 9.2-6 Interpolation phase meter

The window comparator IC 6 checks that the output voltage from the phase meter is within the d.c. range set by the frequency setting. If the voltage is outside this range, IC 6 regulates the phase meter until the output is within the range. IC 1/1 operates as a voltage follower, IC 1/2 being used to generate the upper limit value for the comparator.

9.2.13 OUTPUT AMPLIFIER (63) [2011-L]

The output amplifier brings the level of the carrier signal up to -15 dB into 75 Ω.

9.2.14 DIGITAL CONTROL

The digital control circuit for the OD-15 is located on the CPU board of the SPM-15/PS-15, circuit diagram no. (21). ICs 43, 45 , 47 and 49 are used to convert the byte serial information into parallel data signals.

Valid data exchange can only take place synchronously with the generator operation. This is accomplished with ICs 41, 44, 46, 48 and 50 which use a 10 kHz syncronisation signal fed in at pkt. b14.

Spin
S. Luigi 27
1004 ORBASSANO (TO)
Tel.(011)90.38.866 Fax 90 38.960

Anhang
Appendix
Annexe

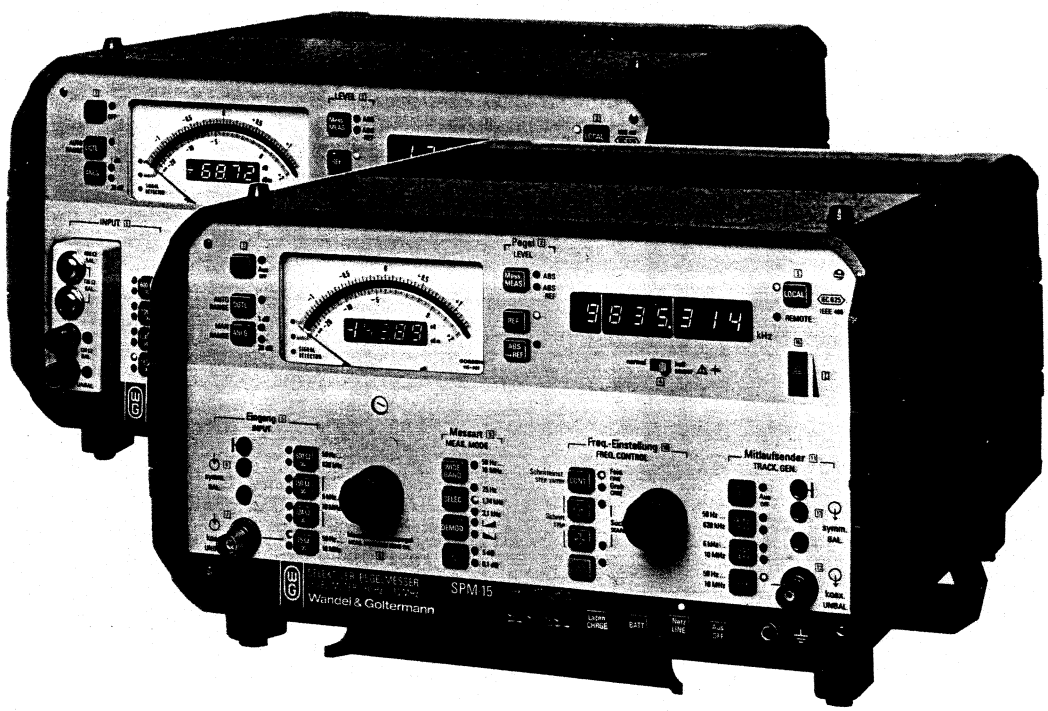

Selektiver Pegelmesser — SPM-15
Selective Level Meter
Mesureur de niveau sélectif

BN 0955/00.87

SELEKTIVER PEGELMESSER SPM-15

für den Frequenzbereich 50 Hz bis 10 MHz
mit Sendeteil

SELECTIVE LEVEL METER SPM-15

for the frequency range 50 Hz to 10 MHz
with send section.

MESUREUR DE NIVEAU SELECTIF SPM-15

pour la gamme de fréquence 50 Hz à 10 MHz
avec section générateur

Anhang/Appendix/Annexe BN 955/01/02
Serie/series/séries M...

Best.-Nr. / Order No. / Numéro de commande 0955/00.87

Ausgabe / Edition 3517/5.87 (ersetzt / replaces / remplace 3351)

I.7.84 Ja/sl
0.24.5.87

Änderungen vorbehalten
Printed in the Federal Republic of Germany

Subject to change without notice
Printed in the Federal Republic of Germany

Droits de modifications réservés
Imprimé en République Fédérale d'Allemagne

Wandel & Goltermann Elektronische Meßtechnik

Inhaltsverzeichnis des Anhangs SPM-15

1 Selektiver Pegelmesser SPM-15	BN 955/01/02	Serie M ...
1.1 Synthesizer OD-15	BN 2011/01	Serie M
2 Optionen:		
2.1 Batteriezusatz BAZ-15, wiederaufladbar	BN 955/00.01	Serie H
2.2 Mitlaufsender PSE-15	BN 955/00.02	Serie N
2.3 Interface <IEC 625>-Karte	BN 955/00.03	Serie G
2.4 Zusatzfilter 100 Hz	BN 955/00.06	Serie B
2.5 Ausgangsfeld zum PSE-15 für Grundgerät 955/01	BN 955/00.21	Serie B
2.6 Ausgangsfeld zum PSE-15 für Grundgerät 955/02	BN 955/00.22	Serie C
2.7 Geräuschmessung in dBrnC	BN 955/00.23	-

Contents of Appendix SPM-15

1 Selective Level Meter SPM-15	BN 955/01/02	series M ...
1.1 Synthesizer OD-15	BN 2011/01	series M
2 Options:		
2.1 Battery Pack BAZ-15, rechargeable	BN 955/00.01	series H
2.2 Tracking Generator PSE-15	BN 955/00.02	series N
2.3 Interface <IEC 625> Card	BN 955/00.03	series G
2.4 100 Hz auxiliary filter	BN 955/00.06	series B
2.5 Output section for PSE-15 mainframe 955/01	BN 955/00.21	series B
2.6 Output section for PSE-15 mainframe 955/02	BN 955/00.22	series C
2.7 Noise measurements in dBrnC	BN 955/00.23	-

1 Mesureur de niveau sélectif SPM-15	BN 955/01/02	séries M ...
1.1 Synthétiseur OD-15	BN 2011/01	série M
2 Options:		
2.1 Auxiliaire batterie BAZ-15, rechargeable	BN 955/00.01	série H
2.2 Générateur suiveur PSE-15	BN 955/00.02	série N
2.3 Carte Interface <IEC 625>	BN 955/00.03	série G
2.4 Filtre auxiliaire 100 Hz	BN 955/00.06	série B
2.5 Section sortie pour PSE-15 pour appareil de base 955/01	BN 955/00.21	série B
2.6 Section sortie pour PSE-15 pour appareil de base 955/02	BN 955/00.22	série C
2.7 Mesure de bruit en dBrnC	BN 955/00.23	-

Anmerkungen zu den Stromlaufplänen und den Schaltteillisten

Abkürzungsbeispiele

④ = Stromlaufplan 4

B20-B = Leiterplatte B

Pkt. 6 = Anschlußpunkt 6

TP 203 = Testpunkt 203

Farbkennzeichnung

bl = blau
blank = blank
br = braun
fl = farblos
ge = gelb
gn = grün
gr = grau
rs = rosa
rt = rot
Schirm = Schirm
sw = schwarz
vio = violett
ws = weiß

grrt = grau/rot

geschirmte Leitung
blanker Draht

BS = Bestückungsseite
NBS = nicht bestückte Seite

Alle angegebenen Spannungen sind mit einem Instrument 100 kΩ/V gegen 0 V gemessen.

Relais in Ruhestellung dargestellt

Sollten die Werte bestimmter Bauelemente in den Stromlaufplänen und Schaltteillisten differieren, so sind stets die Angaben in den Schaltteillisten als verbindlich anzusehen.

Bestellangaben

Bei Ersatzteilbestellungen unbedingt beachten:

Die genaue Bezeichnung ist der Schaltteilliste zu entnehmen.

Bauelemente mit BV bzw. WN sind im Werk anzufordern.

Neben der Bestellnummer (BN) ist die Gerätenummer mit Serienindex, die Positionsnummer des Bauelements und die Sachnummer anzugeben.

Beispiel: PM-20 BN 881/01
Nr. 0001 A

2 T 2

Schaltbild-Nr. Positions-Nr.
Sach-Nr. 0001-0015.836

Baugruppenverbindungen

Da die Stromlaufpläne für jede Baugruppe getrennt gezeichnet sind, müssen alle Zuleitungen zu anderen Baugruppen deutlich erkennbar sein. Die nachstehende Skizze erläutert die hier angewandten Verfahren zur Kennzeichnung.

Verfahren 1

Beim Anschlußpunkt einer Baugruppe steht die Adresse der anderen Anschlußpunkte, mit denen er verbunden ist.

Verfahren 2

Beim Anschlußpunkt steht nur eine Signalbezeichnung ohne Adresse. Dann sind alle Anschlußpunkte anderer Baugruppen mit der gleichen Signalbezeichnung untereinander verbunden.

Notes for Circuit Diagram and the Parts Lists

Abbreviations examples

Circuit diagram 4

Circuit board B

Connection point 6

Test point 203

Colour coding

blue
bare wire
brown
transparent
yellow
green
grey
pink
red
screening
black
violet
white

grey/red

Screened lead
Bare wire

Components side
Soldering side

All voltage ratings measured with respect to 0 V with 100 kΩ/V meter.

Relays shown in rest position

If the values of individual components listed in the circuit diagrams and component lists should differ from another, those values given in the component lists are valid.

Ordering Information

When ordering spare parts, the following instructions must be followed without fail:

The exact designation of the component shall be taken from the "Parts Lists".
Components prefixed with BV or WN should be ordered from the manufacturer, W&G.
Next to the order number (BN) the serial number of that particular instrument along with the position number of the component and the item number shall be given.

Example: PM-20 BN 881/01
No. 0001 A

2 T 2

Circuit diagram Position No.
Item number 0001-0015.836

Connections between subassemblies

Because of each subassembly having been drawn separately, all the interconnections with the other subassemblies must be clearly identifiable. The following sketch explains the method used here for identifying the connections.

Method 1

At a connection point of a subassembly, there are located the addresses of the other connection points with which it is connected.

Method 2

At the connection point, there is only located a signal designation without address. Then, all similarly designated connection points of other subassemblies are interconnected.

Notes sur les schémas de principe et les listes de composants

Examples d'abréviations

Schéma 4

Platine B

Point de raccordement 6

Point test 203

Code des couleurs

bleu
nu
brun
transparent
jaune
vert
gris
rose
rouge
blindage
noir
violet
blanc

gris/rouge

Conducteur blindé
Fil nu

Côté composants
Côté soudure

Toutes les tensions données sont mesurées par rapport à 0 V avec un instrument de 100 kΩ/V.

Les relais sont représentés en position repos

Lorsque les valeurs de certains composants diffèrent entre les schémas de principes et les listes de composants, les valeurs des listes de composants sont seules valables.

Données pour la commande

Pour la commande de composants de rechange il faut absolument observer:

La désignation exacte du composant qui est à prendre dans la liste des composants.
Les composants BV ou WN sont à réclamer à l'usine.

Outre le numéro de commande (BN) le numéro de l'appareil avec son index de série et le numéro de position du composant et numéro d'object sont a donner.

Exemple: PM-20 BN 881/01
N° 0001 A

2 T 2

N° de schéma N° de position
N° d'object 0001-0015.836

Raccordement des modules

Les schémas de principe des modules étant représentés séparément les liaisons entre les différents modules doivent être facilement reconnues.
Le schéma suivant indique le système d'identification utilisé.

Système 1

Le point de raccordement du module comporte l'adresse de l'autre point de raccordement auquel il est relié.

Système 2

Le point de raccordement ne comporte qu'une indication de signal sans adresse. Tous les points de raccordement des autres modules comportant la même indication de signal sont alors reliés ensemble.

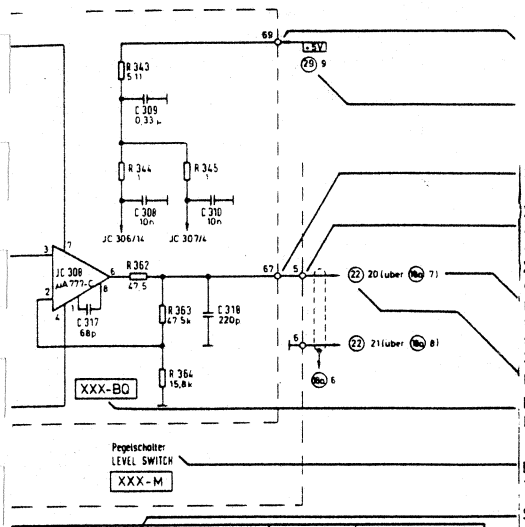

Anschlußpunkt 69 der Leiterplatte 697-BQ	Connection point 69 of printed circuit board (p.c.b.) 697-BQ	Point 69 du circuit imprimé 697-BQ
+ 5 V kommt von Stromlaufplan (29) Anschlußpunkt 9	+5 V coming from circuit diagram (29), connection point 9	le +5 V arrive du schéma (29), point 9
Anschlußpunkt 67 der Leiterplatte XXX-BQ geht auf Anschlußpunkt 5 der Trägerkarte XXX-M, von hier aus zu Stromlaufplan (18a) Anschlußpunkt 7 und schließl. zu Punkt 20 des Stromlaufplanes (22)	Connection point 67 of the p.c.b. XXX-BQ going to connection point 5 of mother board XXX-M, and from this point, to circuit diagram (18a), connection point 7, finally going to point 20 of circuit diagram (22).	le point 67 du circuit imprimé XXX-BQ va au point 5 de la carte support XXX-M, de là au schéma (18a), point 7 et pour terminer au point 20 du schéma (22)
Bezeichnung der Leiterplatte (Sandwichkarte)	Designation of p.c.b. (sandwich card)	Désignation du circuit imprimé (carte sandwich)
Bezeichnung der Trägerkarte	Designation of mother board	Désignation de carte support
Stromlaufplan Nr.	Circuit diagram No.	N° du schéma de principe

Stromlaufplan (3) für Gerät
Pegelsteuerung
LEVEL LOGIC
Serie 4 | Schaltteilliste
XXX-7508 016 / 33

Bezeichnung der Anschlußpunkte

(30) 21: Anschlußpunkt 21 von Schaltbild (30)

(30) S 3010/a/5: Kontakt a/5 von Schalter 10 in Schaltbild (30)

Beispiel: Der Anschlußpunkt M des Schaltbildes (29) mit der Signalbezeichnung "Null-Verschiebung (0,4)" ist mit 2 weiteren Anschlußpunkten der gleichen Signalbezeichnung verbunden.

1) Kontakt a/5 von Schalter 10 in Schaltbild (30) (Verbindung läuft ganz oder teilweise außerhalb des Steckkartenträgers)

2) bBW/7 von Schaltbild (31) (Verbindung läuft innerhalb des Steckkartenträgers)

Bei Steckkartentechnik mit einem Steckkartenträger gibt eine Liste Auskunft über die Anschlußpunkte mit gleicher Signalbezeichnung.

Designation of connection points

(30) 21: connection point 21 from circuit diagram (30)

(30) S 3010/a/5: contact a/5 from switch 10 in circuit diagram (30).

Example: Connection point M of circuit diagram (29) having the signal designation "zero offset (0,4)" is connected to two other connection points of the same signal designation.

1) Contact a/5 from switch 10 in circuit diagram (30) (connection passes completely, or partially, outside of the mother board)

2) bBW/7 from circuit diagram (31) (connection stays within the mother board)

With plug-in p.c.b. technology using plug-in mother boards, a list provides information concerning the connection points having the same signal designation.

Désignation des points de raccordement

(30) 21: point de raccordement 21 du schéma (30)

(30) S 3010/a/5: contact a/5 du commutateur 10 du schéma (30)

Exemple: Le point de raccordement M du schéma (29) avec l'indication de signal "décalage du zéro (0,4)" est relié à deux autres points de raccordement avec la même indication de signal.

1) Contact a/5 du commutateur 10 du schéma (30) (la liaison passe entièrement ou en partie hors de la carte support)

2) bBW/7 du schéma (31) (la liaison passe dans la carte support)

Système de cartes enfichables sur une carte support. Une liste informe des points de raccordement avec la même indication de signal.

Buchsenleisten - Kontaktbezeichnung ≙ Anschlußpunkt-Bezeichnung } von Schaltbild (29)
Edge connectors - contact designation ≙ connection point designation } from Circuit diagram (29)
Prise - désignation du contact ≙ désignation du point de raccordement } du schéma (29)

Signalbezeichnung	außerhalb Prüfbereich Anschlußpunkte innerhalb Prüfbereich	I	II			II	I	innerhalb Prüfbereich Anschlußpunkte außerhalb Prüfbereich	Signalbezeichnung	Leiste (29)
- 12 V	Stromversorgung siehe Bl.16		36	V	18	18		Stromversorgung siehe Bl.16	- 12 V	376-CG
	frei		35	U	17	17	2	(31) Bw 3101 / 4	8×10^{-2}	Bl.33
4×10^{-2}	(31) Bw 3001 / 3	2	34	T	16	16	2	(31) bQ / 8 xxx (30) 19	$2^3 \times 0{,}01$ A	
$2^2 \times 0{,}01$ A	(30) 18 xxx (31) bBW / K	2	33	S	15	15	2	(31) bBW / J xxx (30) 17	$2^1 \times 0{,}01$ A	
$2^0 \times 0{,}01$ A	(30) 16 xxx (31) bBW / M	2	32	R	14	14	5	(18) B / A, (19) E / B, (20) A / B, (22) B / B	Bereich Digital	
1×10^{-2}	(31) Bw 3101 / 1	2	31	P	13	13	2	(31) Bw 3101 / 2	2×10^{-2}	
Null - Verschiebung (0,2)	(30) S 3010 / a / 3 xxx (31) bBW / 6	2	30	N	12	12	2	(31) bBW / 5 xxx (30) S 3010 / a / 2	Null - Verschiebung (0,1)	
Null - Verschiebung (0,4)	(30) S 3010 / a / 5 xxx (31) bBW / 7	2	29	M	11	11	2	(31) bBW / 4 xxx (30) S 3010 / a / 4	Null - Verschiebung (0,3)	
Null - Verschiebung (0,6)	(30) S 3010 / a / 7 xxx (31) bBW / 8	2	28	L	10	10	2	(31) bBW / 3 xxx (30) S 3010 / a / 6	Null - Verschiebung (0,5)	
Null - Verschiebung (0,8)	(30) S 3010 / a / 9 xxx (31) bBW / 9	2	27	K	9	9	2	(31) bBW / 2 xxx (30) S 3010 / a / 8	Null - Verschiebung (0,7)	
Masse (hoch)	Stromversorgung siehe Bl.16		26	J	8	8		Stromversorgung siehe Bl.16	Masse (hoch)	
Verschiebung 2^0	(19) E / 6, (22) B / 2, (22) U / 7	4	25	H	7	7	2	(31) bBW / 1 xxx (30) S 3010 / a / 10	Null - Verschiebung (0,9)	
Verschiebung 2^2	(19) E / 5	2	24	F	6	6	2	(19) E / M	Verschiebung 2^1	
Verschiebung 2^3 : Vorzeichen + / -	(22) B / A	2	23	E	5	5	2	(19) E / 10	Verschiebung 2^3	
	(30) 21 xxx (31) bBW/17, (19) E/N	3	22	D	4	4	2	(22) B / 4	Verschiebung 2^2 :	
Verschiebung 2^1 :	(22) B / C	2	21	C	3	3	3	(20) A / F, (21) G / F	$2^3 \times 0{,}01$ A	
$2^2 \times 0{,}01$ A	(20) A / K, (21) G / K	3	20	B	2	2	3	(20) A / L, (21) G / L	$2^1 \times 0{,}01$ A	
+ 5 V	Stromversorgung siehe Bl.16		19	A	1	1	3	(20) A / M, (21) G / M	$2^0 \times 0{,}01$ A	

Anschlußpunkte mit gleicher Signalbezeichnung für diese Buchsenreihe

Connection points with the same signal designation for this connector row of contacts

Points de raccordement avec même indication de signal pour cette rangée de prises

außerhalb Prüfbereich xxx innerhalb Prüfbereich

außerhalb Prüfbereich ≙ diese Anschlußpunkte sind durch Leitungen verbunden, die teilweise oder ganz außerhalb des Steckkartenträgers verlaufen.

outside of test region xxx within test region

outside of test region ≙ these connection points are connected by lines which partially, or completely, pass outside of the mother board.

hors gamme de contrôle xxx dans la gamme de contrôle

hors gamme de contrôle ≙ ces points de raccordement sont reliés par des conducteurs qui passent en partie ou entièrement hors de la carte support.

ELEKTRODENKENNZEICHNUNG
ELECTRODE DESIGNATION / DESIGNATION d'ELECTRODE

Sofern nicht anders vermerkt, alle Anschlußschemas von oben gesehen
Unless otherwise noted, all connection plans are seen from above
Sans autres indications tous les schemas de raccordement sont vus de dessus

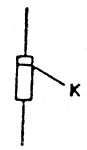

1N 4007
1N 4448
1N 4572 A
1N 4573 A
BB 329
HP 5082 - 2800
HP 5082- 2811
ZPD 3
ZPD 5,1
ZPD 5,6
ZPD 7,5
ZPD 10
ZTE 1,5
ZTE 2
ZY 33

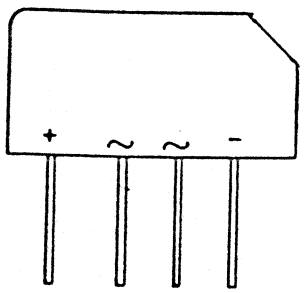

B 80 C 3700 / 2200

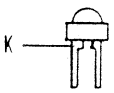

CQX 43 N

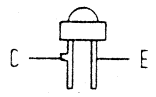

BPX 81 / IV

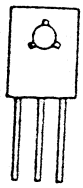

BD 675
BD 775

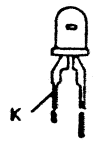

CQV 11 - 7
CQV 15 - 6

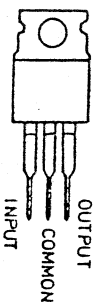

µA 7805 AH

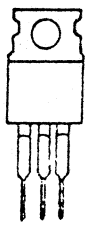

BDX 33 B

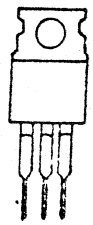

BUZ 10

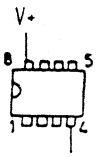

LM 393 N

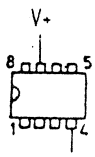

µA 741 HC
µA 776 TC
LF 356 H
TL 061
TL 082
ICL 7615
NE 5534 AN

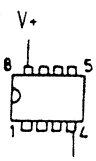

TL 062

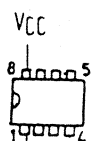

ICM 7555

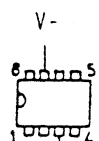

TAA 2761

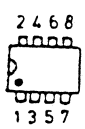

IE 500
SRA-1

Serie A...

Bv. 955 - 9480.004/4 2

4 Bl.
Bl. 1

ELEKTRODENKENNZEICHNUNG
ELECTRODE DESIGNATION / DESIGNATION d'ELECTRODE

Sofern nicht anders vermerkt, alle Anschlußschemas von oben gesehen
Unless otherwise noted, all connection plans are seen from above
Sans autres indications, tous les schemas de raccordement sont vus de dessus

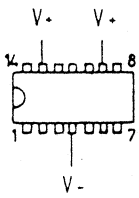

µA 747 PC
TDA 1078
NE 5539N

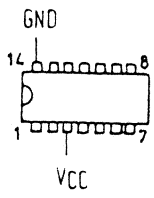

LM 339

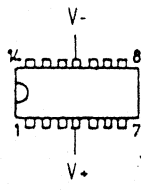

TL 064

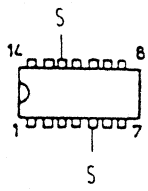

CA 3102 E

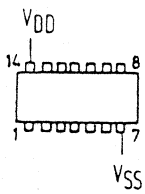

CD 4047
MC 14001
MC 14011
MC 14013
MC 14066
MC 14075
MC 14077
MC 14081
MC 14561

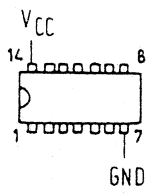

SN 74 LS 00
SN 74 LS 02
SN 74 LS 04
SN 74 LS 08
SN 74 LS 74
SN 74 LS 393

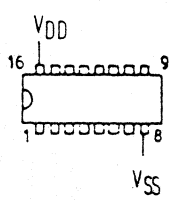

HEF 40098
MC 14027
MC 14028
MC 14042
MC 14056
MC 14060
MC 14503
MC 14516
MC 14520
MC 14538
MC 14572

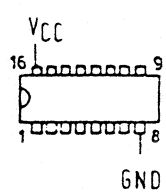

SN 74 LS 138
SN 74 LS 368

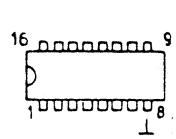

ULN 2003 ANS 11

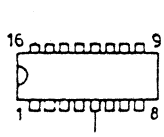

CA 3083

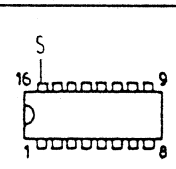

CA 3096

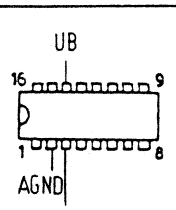

AD 7524 JN

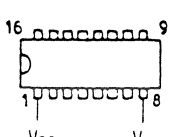

MC 14049
MC 14050

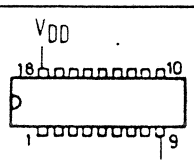

CDP 1824 E

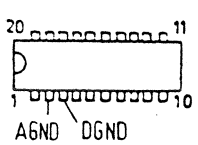

AD 7545 KN

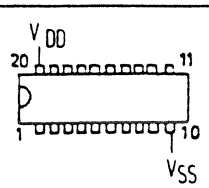

HEF 40373

Serie A

Bv. 955 - 9480.004/4 2

4 Bl
Bl. 2

ELEKTRODENKENNZEICHNUNG
ELECTRODE DESIGNATION / DESIGNATION d'ELECTRODE

sofern nicht anders vermerkt alle Anschlußschemas von oben gesehen
Unless otherwise noted, all connection plans are seen from above
Sans autres indications tous les schemas de raccordement sont vus de dessus

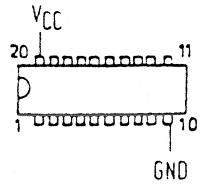

MC 74 HC 244
SN 74 LS 244
SN 74 LS 373

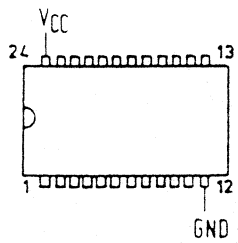

LM 6116 LP - 3

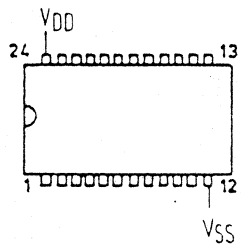

MC 14508

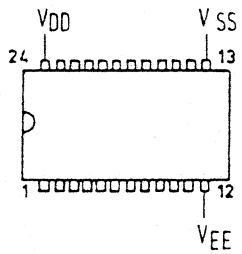

MC 14433 P

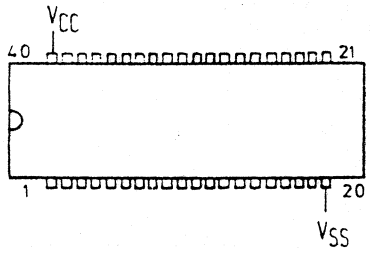

D 8085 AH

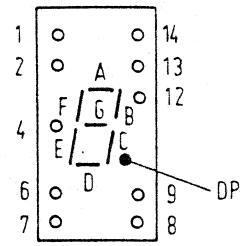

MAN 3640 AF

Von unten gesehen / Seen from below / Vus de dessous

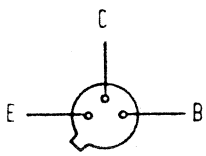

2 N 2219
2 N 2905
2 N 3227
2 N 4035
BCY 59 D
BCY 78 D

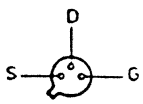

2 N 6660

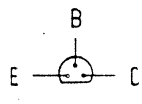

BC 327 - 25

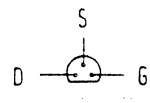

BF 245 A

Serie A...

Bv. 955 - 9480.004 / 4 1a

4 Bl.
Bl. 3

V

ELEKTRODENKENNZEICHNUNG
ELECTRODE DESIGNATION / DESIGNATION d'ELECTRODE

Sofern nicht anders vermerkt, alle Anschlußschemas von oben gesehen
Unless otherwise noted, all connection plans are seen from above
Sans autres indications tous les schemas de raccordement sont vus de dessus

Von unten gesehen / Seen from below / Vus de dessous

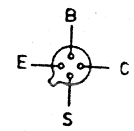

BFY 90

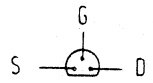

BS 170
BS 250 (ZVP 1304 A)

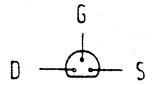

VN 10 LM

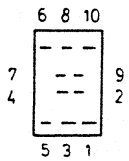

HD 10770
HD 10780

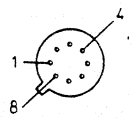

uA 714LHC

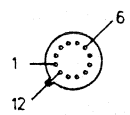

CA 3039

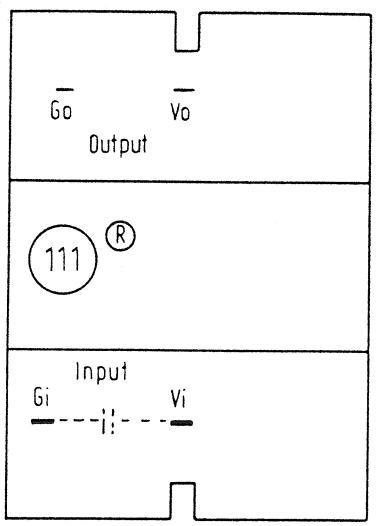

PSR 54-7

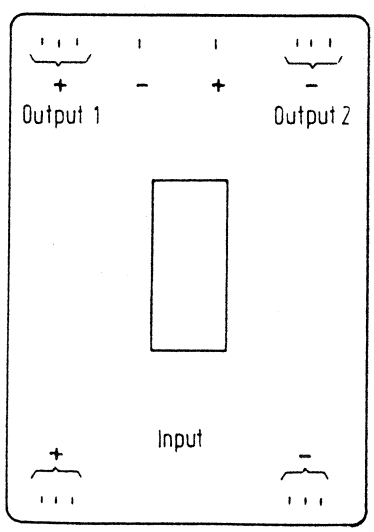

FCR 6 - 1212 - 6

Serie A...

Bv. 955-9480.004 / 4 1a

4 Bl
Bl. 4

ELEKTRODENKENNZEICHNUNG
ELECTRODE DESIGNATION / DESIGNATION d'ELECTRODE

Sofern nicht anders vermerkt, alle Anschlußschemas von oben gesehen
Unless otherwise noted, all connection plans are seen from above
Sans autres indications tous les schémas de raccordement sont vus de dessus

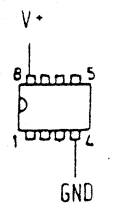

LM 358 N
LM 393 N

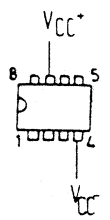

TL 061
TL071
TL 081

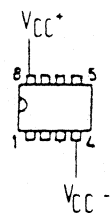

TL 062

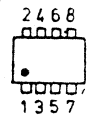

IE 500

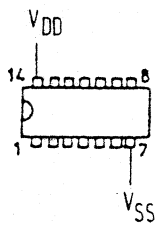

MC 14011
MC 14012
MC 14023
MC 14025
MC 14073
MC 14082
CD 4047
HEF 4068

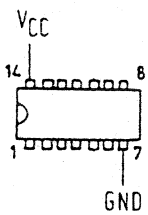

SN 74 LS 00
SN 74 LS 08
SN 74 LS 10
SN 74 LS 20

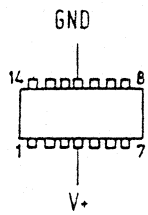

LM 324 N

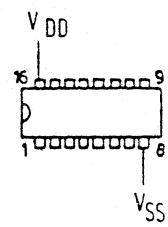

HEF 4027
HEF 40174
MC 14027
MC 14518
CD 40160
CD 40175

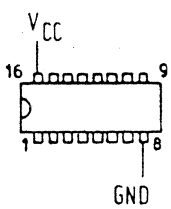

SN 74 LS 112

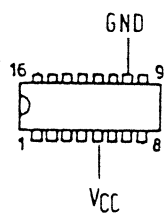

SN 74 LS 90

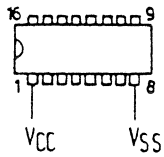

MC 14049

Serie A...		
Bv. 2011-9480.009/4	1a	2 Bl. Bl. 1

ELEKTRODENKENNZEICHNUNG
ELECTRODE DESIGNATION / DESIGNATION d'ELECTRODE

Sofern nicht anders vermerkt, alle Anschlußschemas von oben gesehen
Unless otherwise noted all connection plans are seen from above
Sans autres indications tous les schémas de raccordement sont vus de dessus

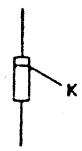

BB 329
ZPD 5,1
ZPD 5,6
ZPD 7,5
ZPD 10
ZTE 2
HP 5082 - 2800
HP 5082 - 2811
HP 5082 - 2815
1 N 4448

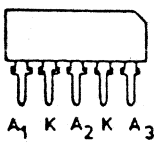

BB 113

Von unten gesehen / Seen from below / Vus de dessous

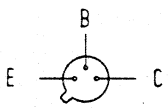

BCY 59 D
BCY 78 D
2N 2369
2N 2894
2N 3251
2N 3947
2N 4035
2N 4209

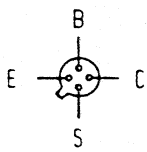

BFY 90

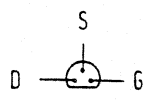

BFY 245 A

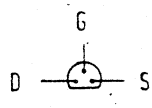

VN 10 LM

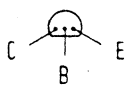

MPS - A 13

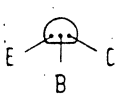

MPS - A 63

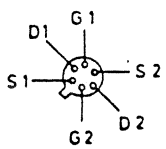

U 402

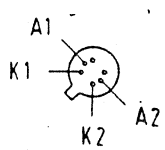

ID 101

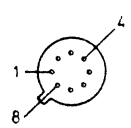

µA 741 HC

Serie A...

Bv. 2011 - 9480.009 / 4 1a | 2 Bl. Bl. 2

1 Selektiver Pegelmesser SPM-15 BN 955/01/02
1 Selective Level Meter SPM-15 BN 955/01/02
1 Mesureur de niveau sélectif SPM-15 BN 955/01/02

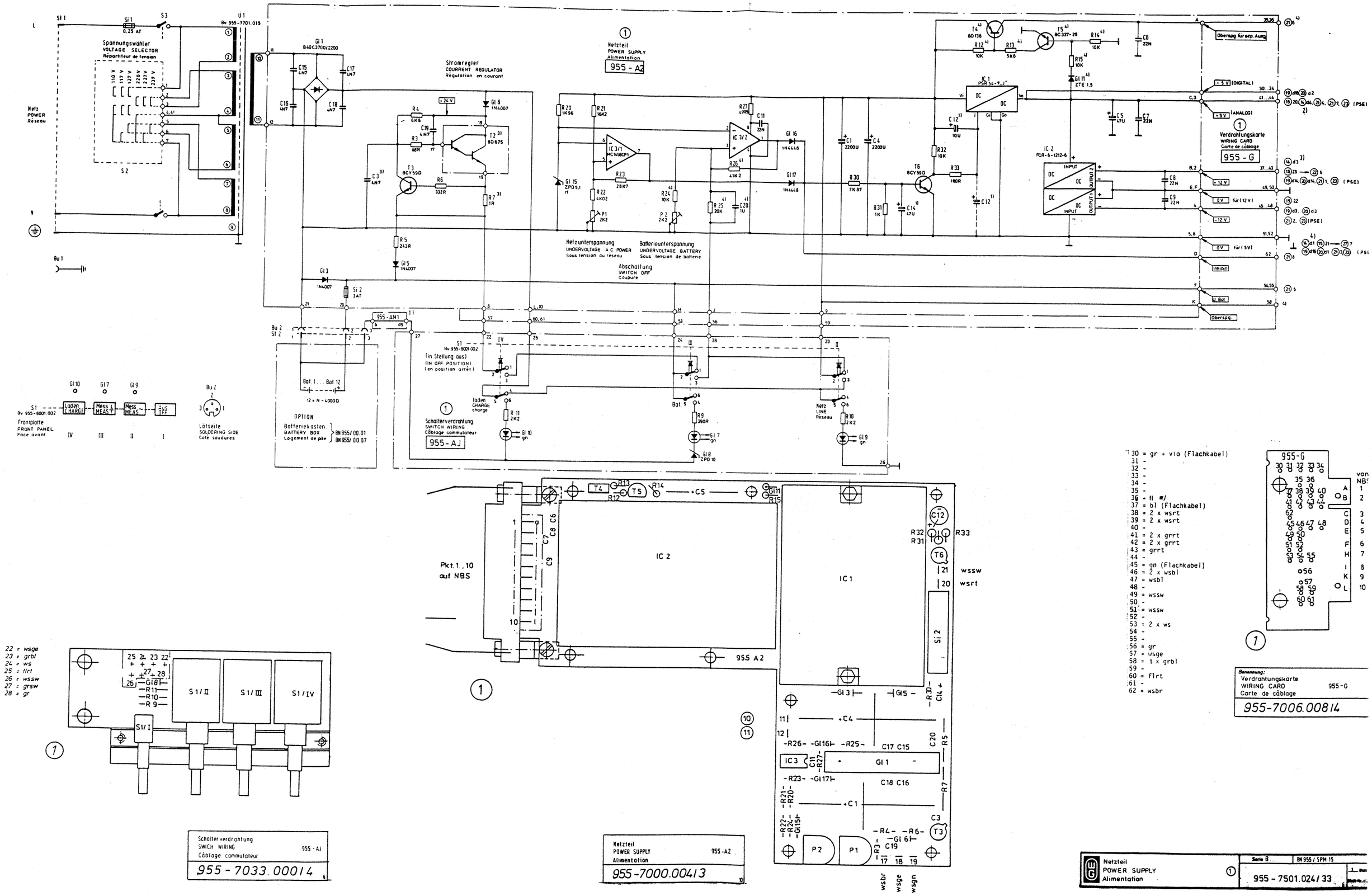

30 = gr + vio (Flachkabel)
31 -
32 -
33 -
34 -
35 -
36 = fl w/
37 = bl (Flachkabel)
38 = 2 x wsrt
39 = 2 x wsrt
40 -
41 = 2 x grrt
42 = 2 x grrt
43 = grrt
44 -
45 = gn (Flachkabel)
46 = 2 x wsbl
47 = wsbl
48 -
49 = wssw
50 -
51 = wssw
52 -
53 = 2 x ws
54 -
55 -
56 = gr
57 = wsge
58 = 1 x grbl
59 -
60 = flrt
61 -
62 = wsbr

22 = wsge
23 = grbl
24 = ws
25 = flrt
26 = wssw
27 = grsw
28 = gr

Schalterverdrahtung
SWICH WIRING
Câblage commutateur
955 - AJ
955 - 7033.00014

Netzteil
POWER SUPPLY
Alimentation
955 - A2
955 - 7000.00413

Benennung:
Verdrahtungskarte
WIRING CARD
Carte de câblage
955 - G
955 - 7006.00814

Netzteil
POWER SUPPLY
Alimentation
Serie B
BN 955 / SPM 15
955 - 7501.024 / 33

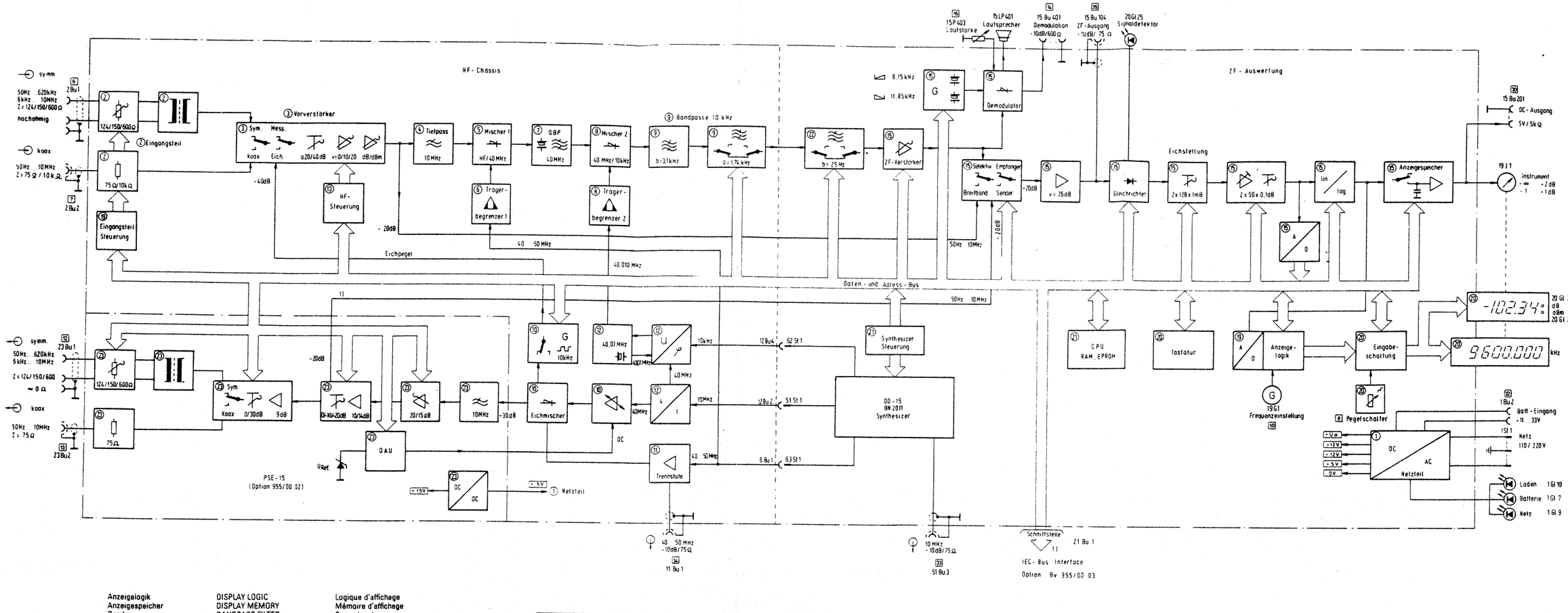

Anzeigelogik	DISPLAY LOGIC	Logique d'affichage
Anzeigespeicher	DISPLAY MEMORY	Mémoire d'affichage
Bandpass	BANDPASS FILTER	Passe bande
Batterie	BATTERY	Batterie
Breitband	WIDEBAND	Large bande
Daten- und Adress-Bus	DATA- AND ADDRESS BUS	Bus d'adresses et de données
Demodulator	DEMODULATOR	Démodulateur
Eingabeschaltung	ENTRY CIRCUIT	Circuit d'entrée
Eingangsteil	INPUT SECTION	Section entrée
Eichen	CALIBRATE	Etalonnage
Empfänger	RECEIVER	Récepteur
Eichmischer	CALIBRATION MIXER	Mélangeur d'étalonnage
Eichpegel	CALIBRATION LEVEL	Niveau étalon
Eichstellung	CALIBRATION SETTING	Position d'étalonnage
F. IEC-Bus Adapter	F. IEC BUS ADAPTOR	Adapteur bus IEC
Frequenzeinstellung	FREQUENCY SETTING	Commande de la fréquence
Gleichrichter	RECTIFIER	Redresseur
HF-Steuerung	RF-CONTROL	Commande RF
hochohmig	HIGH IMPEDANCE	à haute impedance
Instrument	METER	Instrument
Laden	CHARGE	Charge
Lautsprecher	LOUDSPEAKER	Haute-parleur
Lautstärke	VOLUME	Volume sonore
Messen	MEASURE	Mesure
Mischer	MIXER	Mélangeur
Netz	MAINS	Réseau
Netzteil	POWER SUPPLY	Alimentation
Pegelschalter	LEVEL SWITCH	Commutateur de niveau
QBP (Quarzbandpass)	CRYSTAL FILTER	Filtre passe bande à quartz
Schnittstelle	INTERFACE	Interface
Selektiv	SELECTIV	Sélectif
Sender	GENERATOR	Générateur
Signaldetektor	SIGNAL DETECTOR	Détecteur de signeaux
Synthesizer	SYNTHESIZER	Synthétiseur
Tastatur	KEYBOARD	Clavier
Tiefpass	LOW-PASS FILTER	Filtre passe bande
Trennstufe	BUFFER STAGE	Séparateur
Trägerbegrenzer	CARRIER LIMITER	Limiteur de porteur
Vorverstärker	PRE AMPLIFIER	Préamplificateur
ZF-Ausgang	IF-OUTPUT	Sortie IF
ZF-Verstärker	IF-AMPLIFIER	Amplificateur IF

Serienanmerkung
SERIES MODIFICATIONS
Modification de serie

Serie A 11 entfällt, OBLEDED, absent

SPM - 15 / BN 955	Serie A ...
Blockschaltplan BLOCK DIAGRAM Schéma synoptique	0
955 - 7500.012 / 3	2 1 Blatt Blatt FF

Netz
POWER
Réseau

Spannungswähler
VOLTAGE SELECTOR
Répartiteur de tension

Stromregler
COURRENT REGULATOR
Régulation en courant

1 Netzteil
POWER SUPPLY
Alimentation
955 - A2

Netzunterspannung
UNDERVOLTAGE AC POWER
Sous tension du réseau

Batterieunterspannung
UNDERVOLTAGE BATTERY
Sous tension de batterie

Abschaltung
SWITCH OFF
Coupure

1 Verdrahtungskarte
WIRING CARD
Carte de câblage
955 - G

1 Schalterverdrahtung
SWITCH WIRING
Câblage commutateur
955 - AJ

Leitungen ausgelötet
Unsoldered lines
lignes dessoudées

Latseite
SOLDERING SIDE
Cote soudures

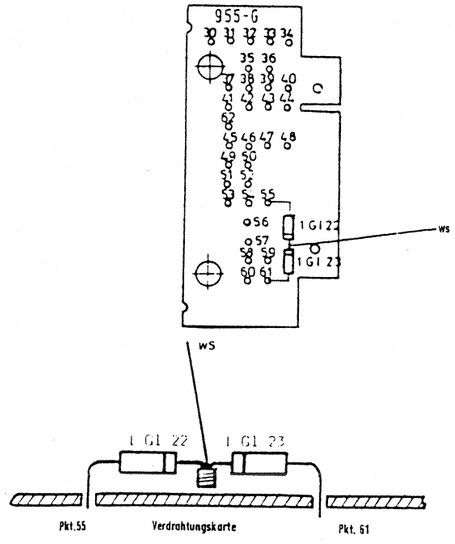

Benennung:	
Verdrahtungskarte WIRING CARD Carte de câblage	955-G
955-7006.00814	1

Netzteil POWER SUPPLY Alimentation	955-A2
955-7000.00413	1

Schalterverdrahtung SWITCH WIRING Câblage commutateur	955-AJ
955-7033.00014	1

Netzteil POWER SUPPLY Alimentation	1	Serie F...	BN 955/11
		955-7501.202 /33	1

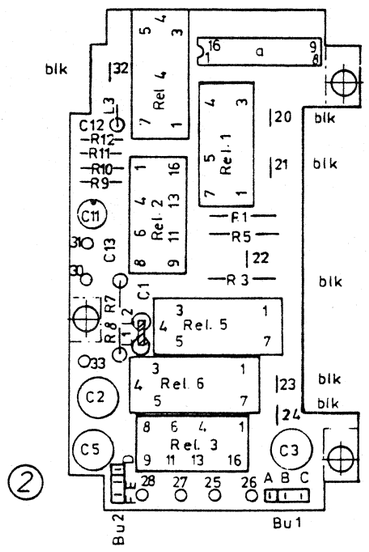

Eingangsteil 1
INPUT SECTION 1 955 - AF1
Section entrée 1

955 - 7030.00314 8

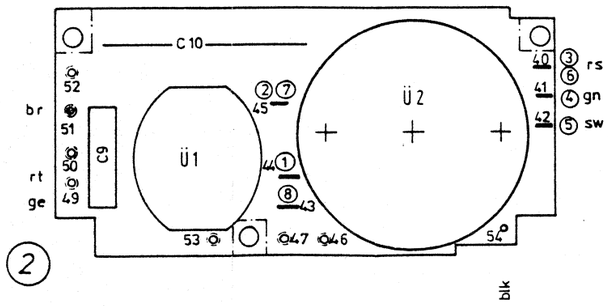

Benennung:
Eingangsteil 2
INPUT SELECTION 2 955-AG1
Section entrée 2

955-7031.00214 5

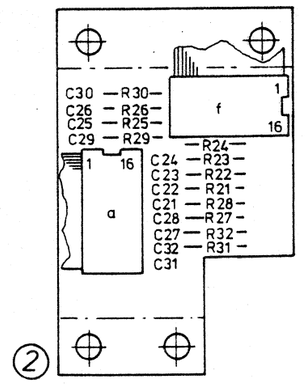

Eingang - Siebung
INPUT FILTERING 955 - AL
Filterage d'entrée

955 - 7035.00814 2

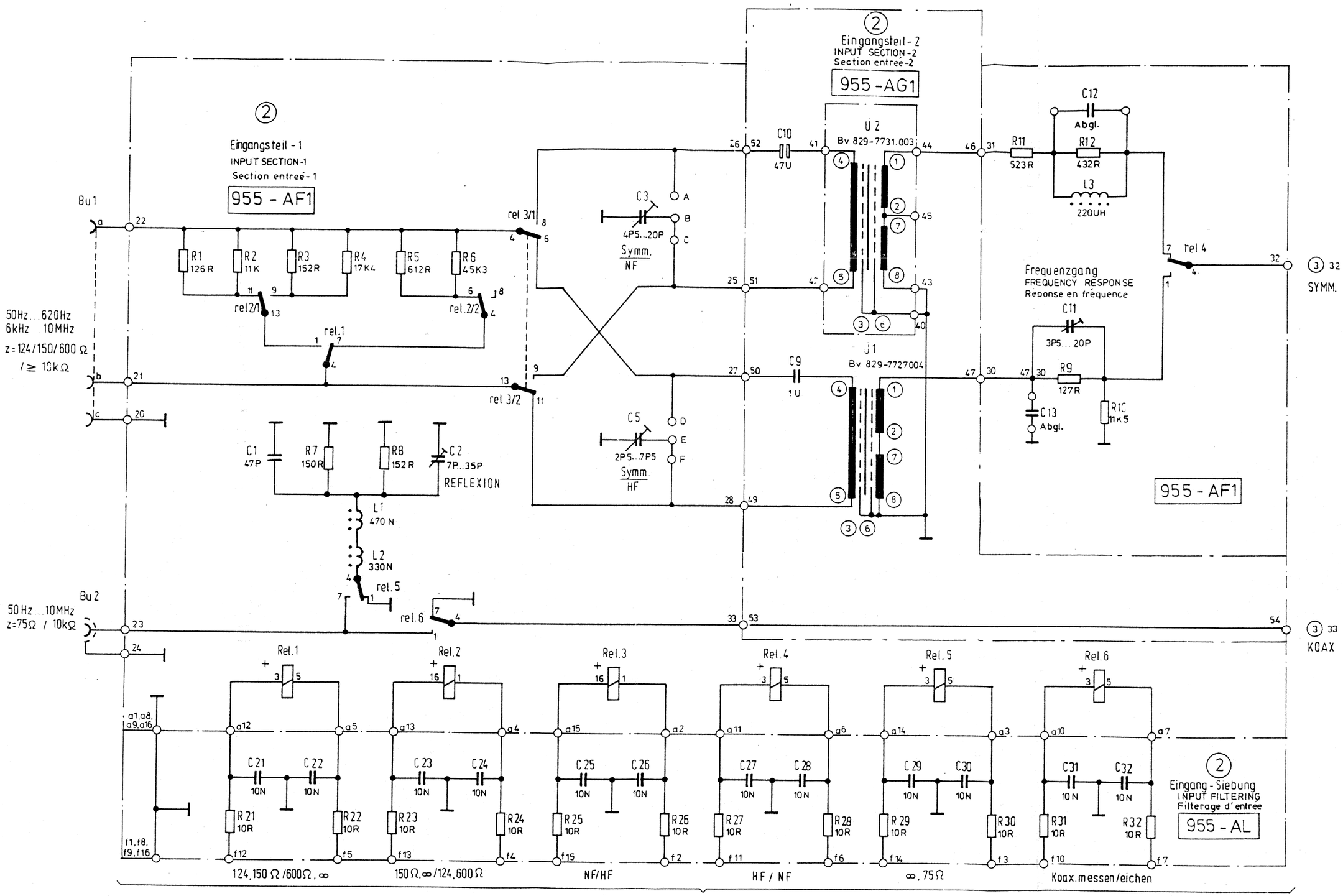

zu (19)f Anzeigelogik
to (19)f DISPLAY LOGIC
à (19)f Logique d'affichage

Nur Ausführung 01
Only version 01
Uniquement pour version 01

WG Stromlaufplan (2) für Gerät: BN 955 / SPM - 15 Eingangsteil INPUT SECTION Section entrée	Serie N 955-7502.023 / 3	1 Blatt Blatt-Nr. 2

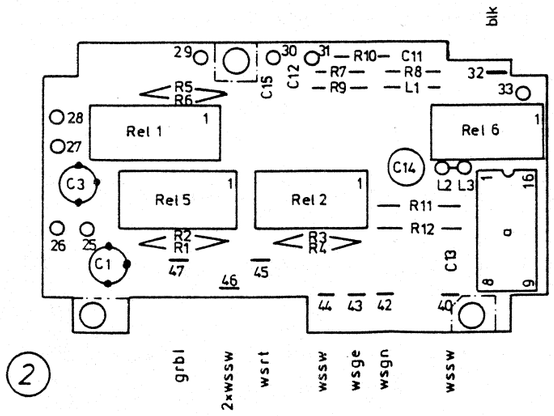

Benennung:	
Eingangsteil-US INPUT SECTION-US Section entrée - US	955-L
955-7010.007/4	4

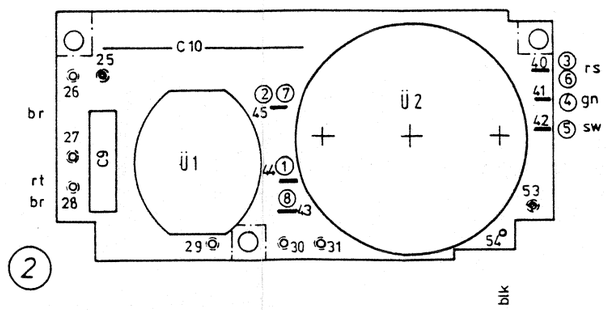

Benennung:	
Eingangsteil 2 INPUT SELECTION 2 Section entrée 2	955-AZ
955-7049.007/4	1

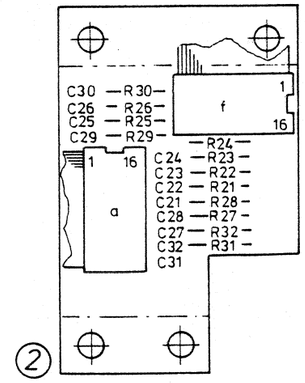

Eingang - Siebung INPUT FILTERING Filterage d'entrée	955-AL
955-7035.00814	2

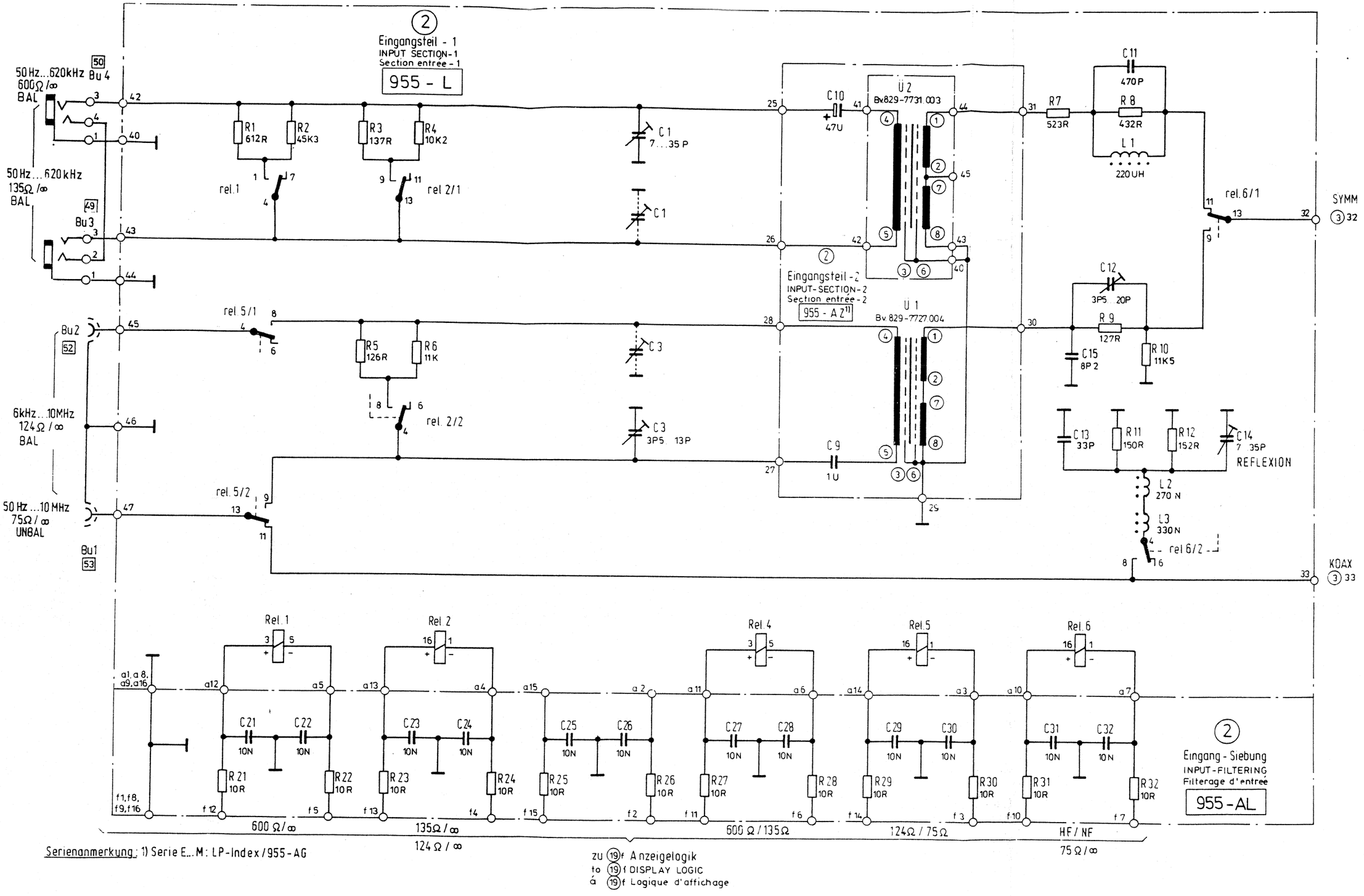

Serienanmerkung: 1) Serie E...M: LP-Index/955-AG

Nur Ausführung 02
Only version 02
Uniquement pour version 02

Stromlaufplan für Gerät: ..SPM-.15 /BN 955/02..		Serie E ...
Eingangsteil - US INPUT SECTION - US Section entrée - US	2	955 - 7502.502/3 4 ...1.. Blatt Blatt-Nr.

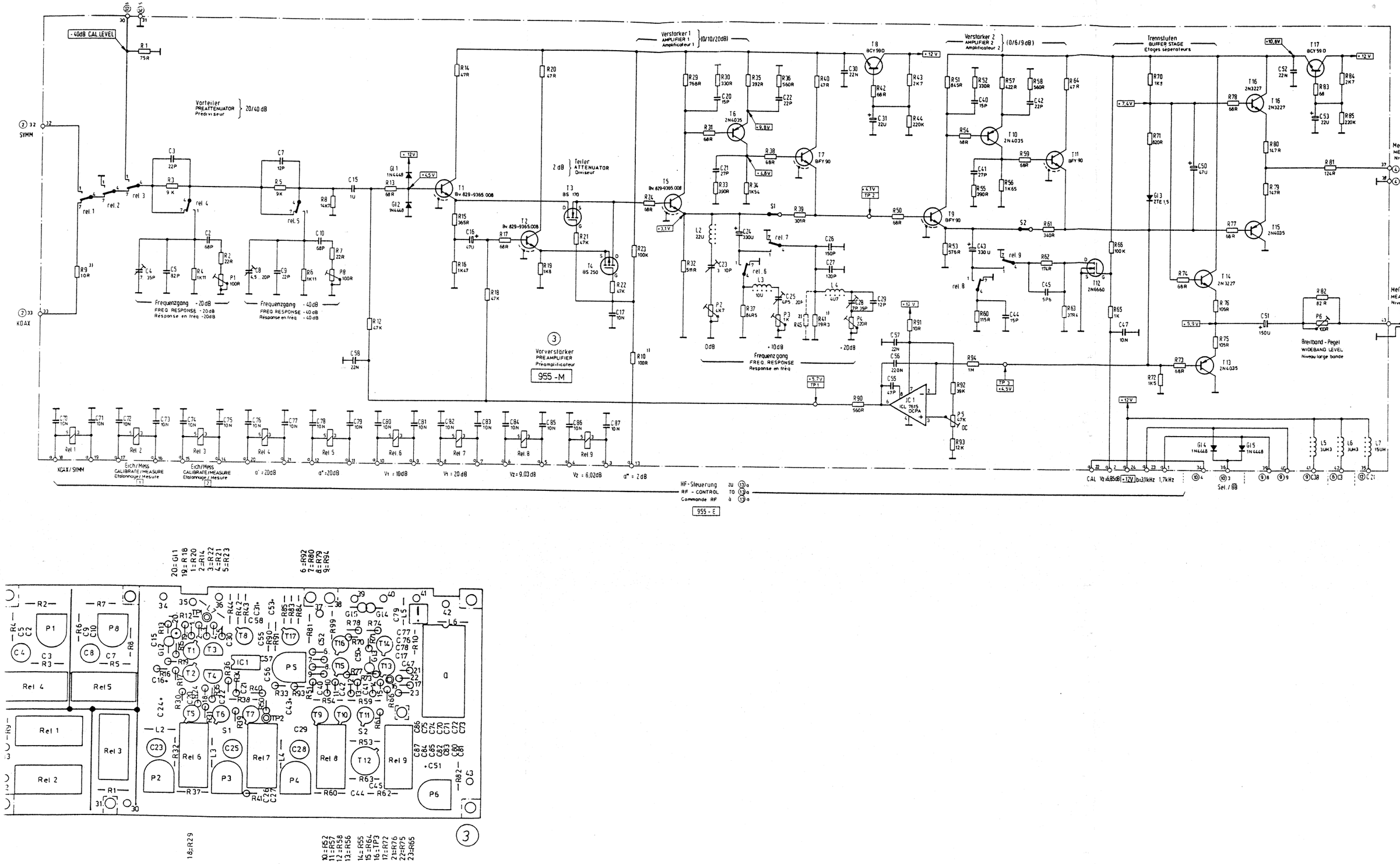

Benennung:	
Vorverstärker PREAMPLIFIER Préamplificateur	955-M
955 -7011.00614	6

Vorverstärker PREAMPLIFIER Préamplificateur	Serie A	BN 955 / SPM -15
955 - 7503.019 /33	4	1 Blatt

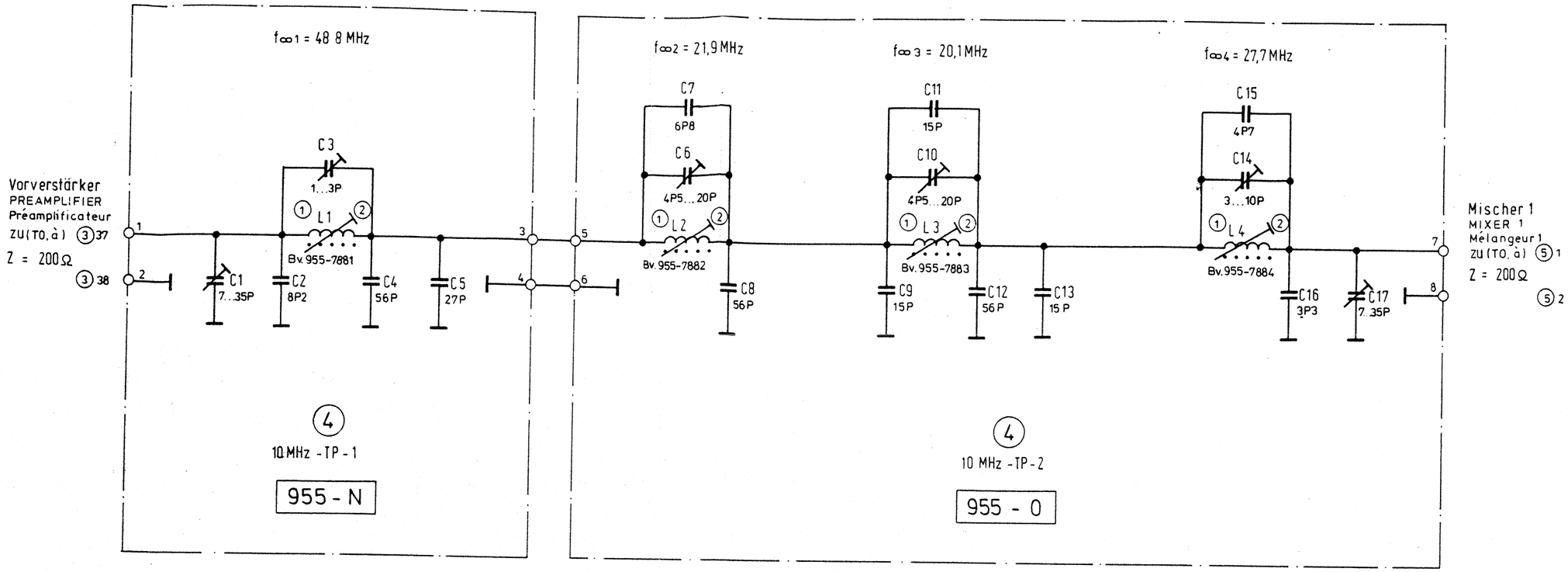

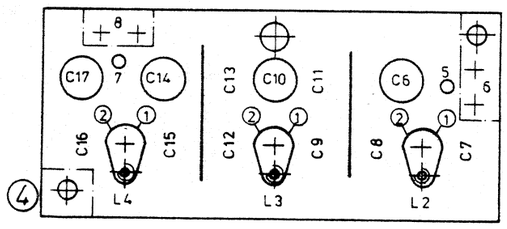

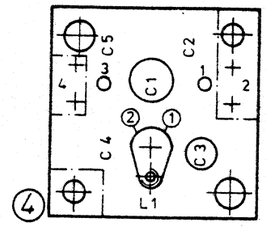

Eingangstiefpass 2 INPUT LOW-PASS FILTER 2 955-0 Filtre passe-bas d'entrée 2
955-7013.00414 1a

Tiefpass LOW-PASS FILTER 955-N Filtre passe-bas
955-7012.00514 1a

Stromlaufplan (4) für Gerät: ...BN 955/.SPM-15.....	Serie A...	Schaltteilliste:
Eing. - Tiefpass 10 MHz INPUT LOW - PASS FILTER 10 MHz Filtre passe - bas 10 MHz	955 - 7504.018 / 3 1a	...1... Blatt Blatt-Nr...:.

40...50MHz

⑤ 5 ⑤ 6

+12 V
18 mA

③ 42 — 5 — R1 56R — R2 15R — C3 4N7 — C1 68U — C2 22N

C7 22N

R7 124R — C6 1N — C8 1N — R11 124R

R20 124R — C14 22N — 10 V

R24 499R — L1 5U6 — L2 5U6 — R28 499R

C5 1N — R5 6K04 — R6 8K87

T1 BFY 90 — T2 BFY 90 — T3 BFY 90 — T4 BFY 90 — T5 BFY 90 — T6 BFY 90

+6V — 2,5 V — 6 V — 4 V

R13 6K04 — R14 8K87 — C10 1N

R21 3K74 — R23 2K87 — C12 10N — R22 68R

600 mVSS

R31 3K74 — R32 2K87 — R29 68R — C17 10N — R33 95R3

R12 68R — R17 825R — R16 1K5 — C11 10N — R9 158R

R30 68R — C16 10N — R26 732R

3 — ⑪ 2 z Trennstufe

4 — 40...50MHz Bu1 — ⑬ St1 (OD-15)

4 V

⑥

Träger begrenzer 1
CARRIER LIMITER 1
Limiteur de porteur 1

955-S

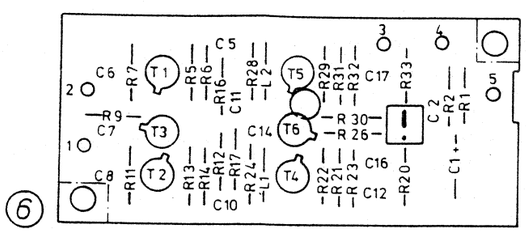

⑥

Benennung:	
Trägerbegrenzer 1	
CARRIER LIMITER 1	955-S
Limiteur de porteur 1	
955-7017.00014	1a

Stromlaufplan für Gerät: SPM-15 / BN955	Serie A
Trägerbegrenzer 1 CARRIER LIMITER 1 Limiteur de porteur 1 ⑥	955-7506.016/3 2
	1 Blatt Blatt-Nr. 1

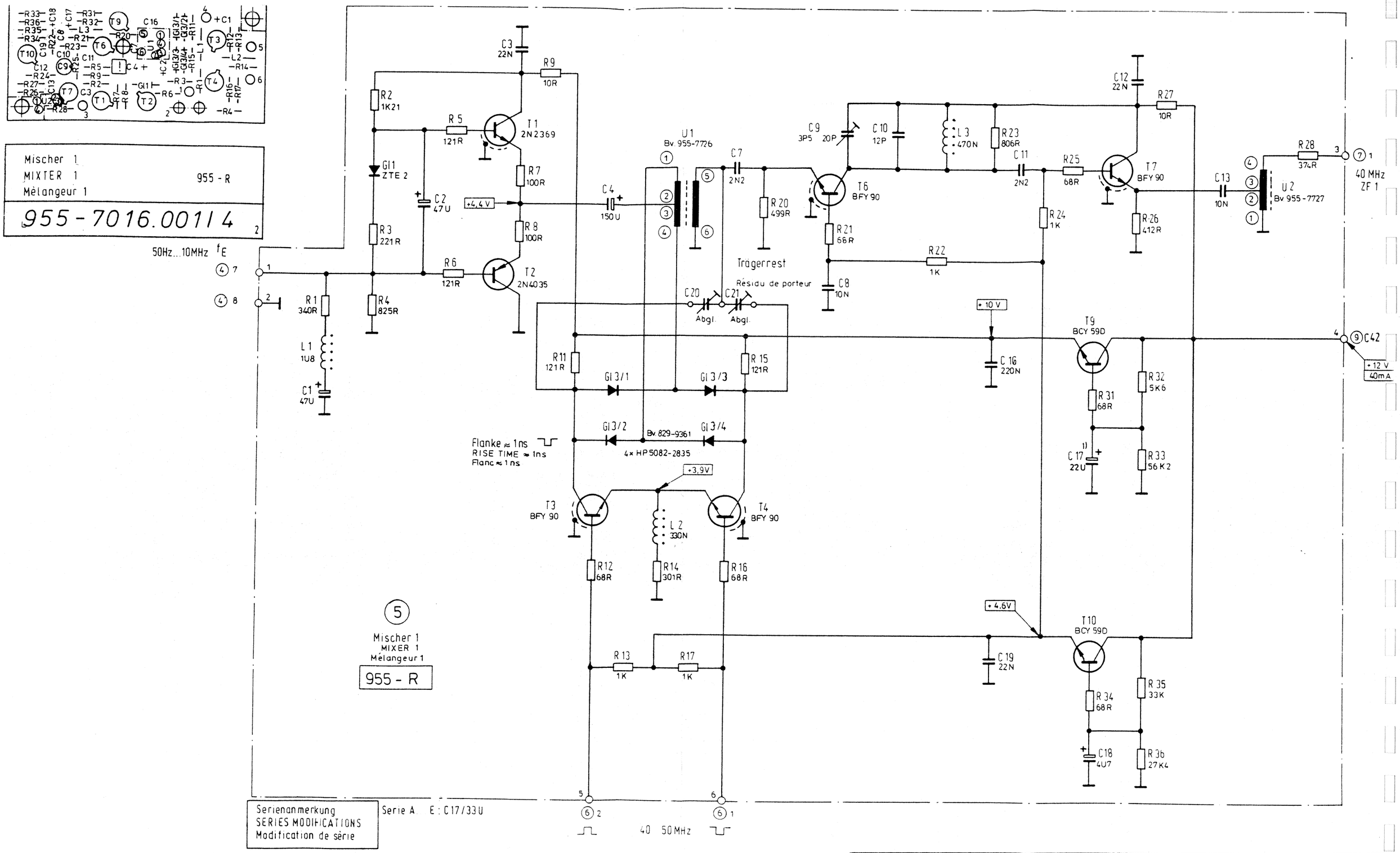

Stromlaufplan für Gerät: BN 955 / SPM - 15 Mischer 1 MIXER 1 Mélangeur 1 ⑤	Serie A	Schaltteilliste:	
	955-7505.017 / 3	3	1 Bla Blatt-Nr.

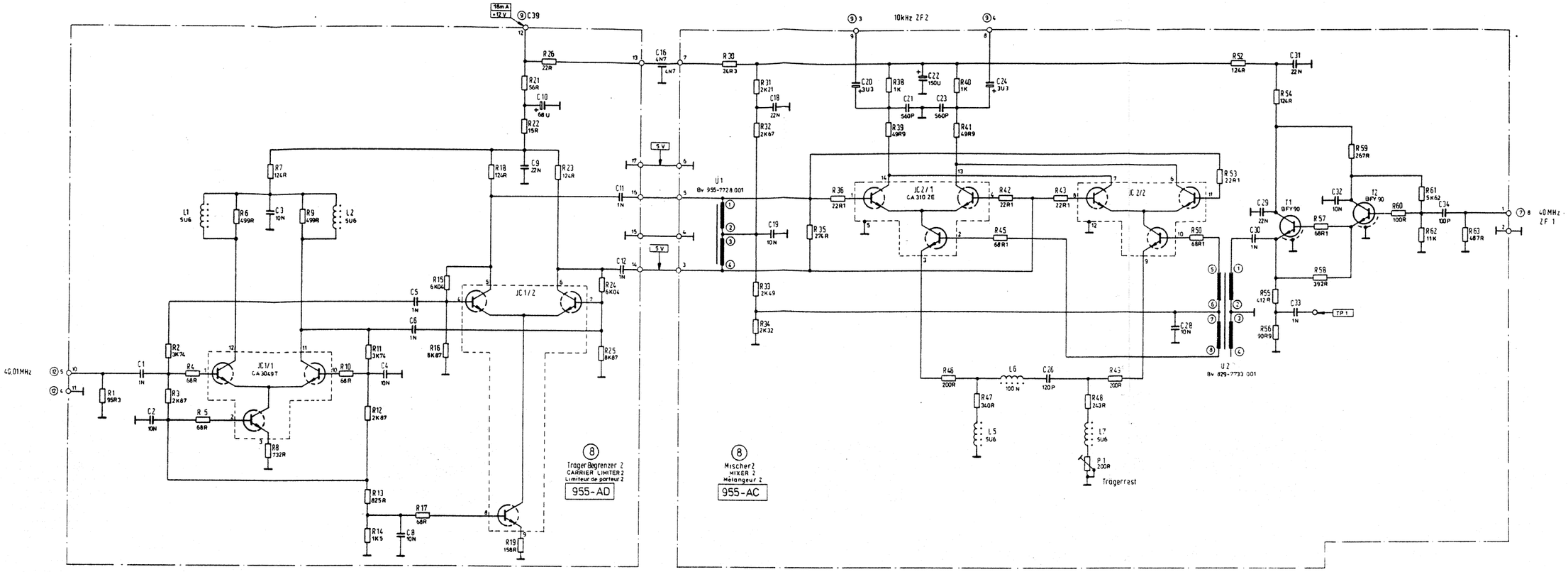

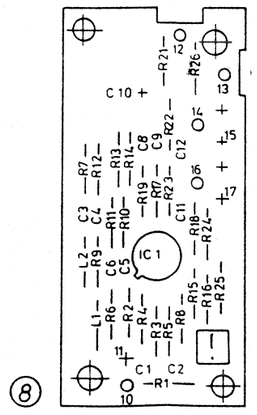

Trägerbegrenzer 2 CARRIER LIMITER 2 Limiteur de porteur 2	955 - A0
955-7028.00214	1

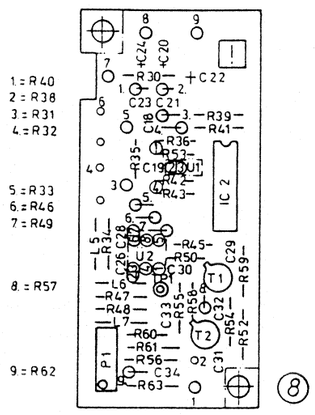

Mischer 2 MIXER 2 Mélangeur 2	955-AC
955-7027.00314	1

Mischer II MIXER II Mélangeur II	8	Serie A	BN 955 / SPM - 15
		955 - 7508 . 014 / 33	1 Bl.

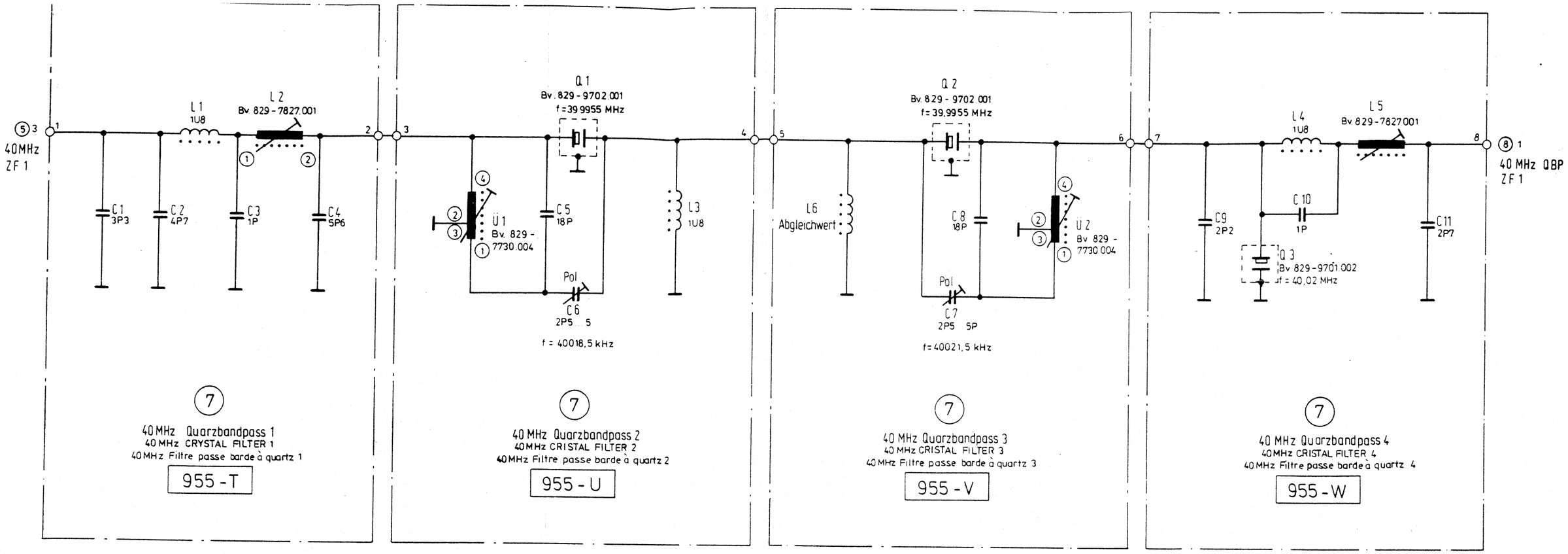

Grunddämpfung 3,5 dB
INSERTION LOSS 3,5 dB
Affaiblissement fondamental 3,5 dB

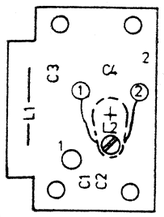

7

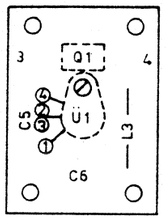

7

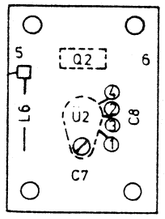

7

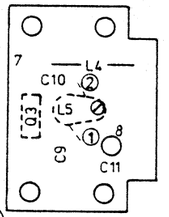

7

Benennung:
40 MHz-Quarzbandpass 1
40 MHz-CRYSTAL FILTER 1 955-T
40 MHz Filtre passe bande á quarz 1

955 - 7018.00914 2

Benennung:
40 MHz-Quarzbandpaß 2
40 MHz-CRYSTAL FILTER 2 955-U
40 MHz Filtre passe bande á quartz

955-7019.00814 2

Benennung:
40 MHz-Quarzbandpass 3
40 MHz-CRYSTAL FILTER 3 955-V
40 MHz-Filtre passe bande á quartz 3

955-7020.00014 2

Benennung:
40 MHz-Quarzbandpass 4
40 MHz-CRYSTAL FILTER 955-W
40 MHz Filtre passe bande á quartz

955-7021.00914 3

Stromlaufplan für Gerät: SPM-15 / BN 955
40 MHz Quarzbandpass
40 MHz CRYSTAL FILTER ⑦
40 MHz Filtre passe bande à quartz

Serie A	Schaltteilliste:	
955 – 7507.015 / 34	2	1 Blatt Blatt-Nr.

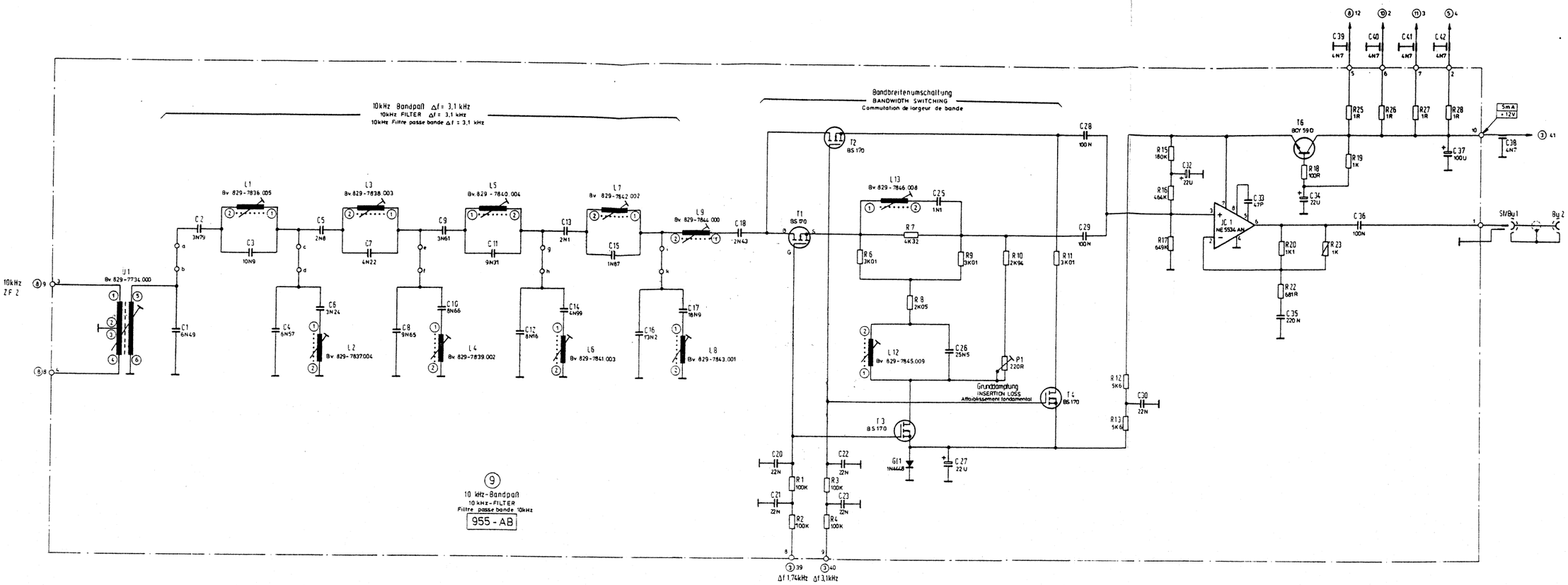

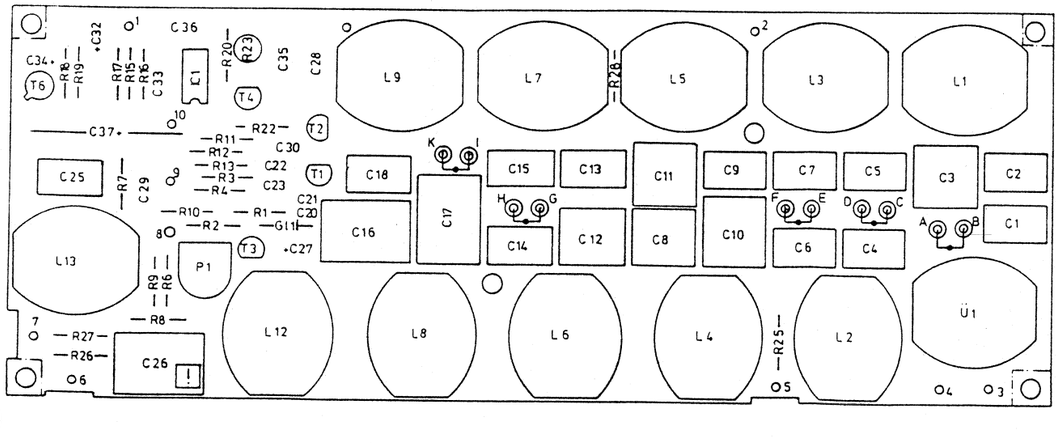

9

Benennung 10 kHz-Bandpaß 10 kHz FILTER 955-AB Filtre passe bande 10 kHz	
955-7026.00413	7

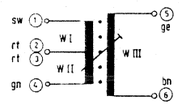

Serie A... Übertrager 9 Ü1
Bv. 829-7734.000 1a

10 kHz-Bandpaß 10 kHz-FILTER Filtre passe bande 10 kHz	9	Serie A... BN 955 / SPM-15 955-7509.013 / 33 1a 1. Blatt

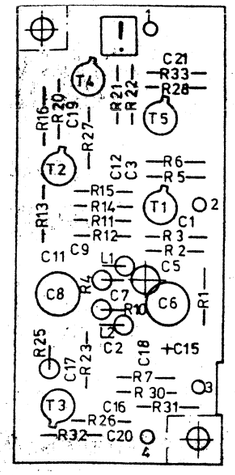

11

Trennverstärker
BUFFER AMPLIFIER 955 - AA
Amplificateur séparateur

955-7025.00514 1a

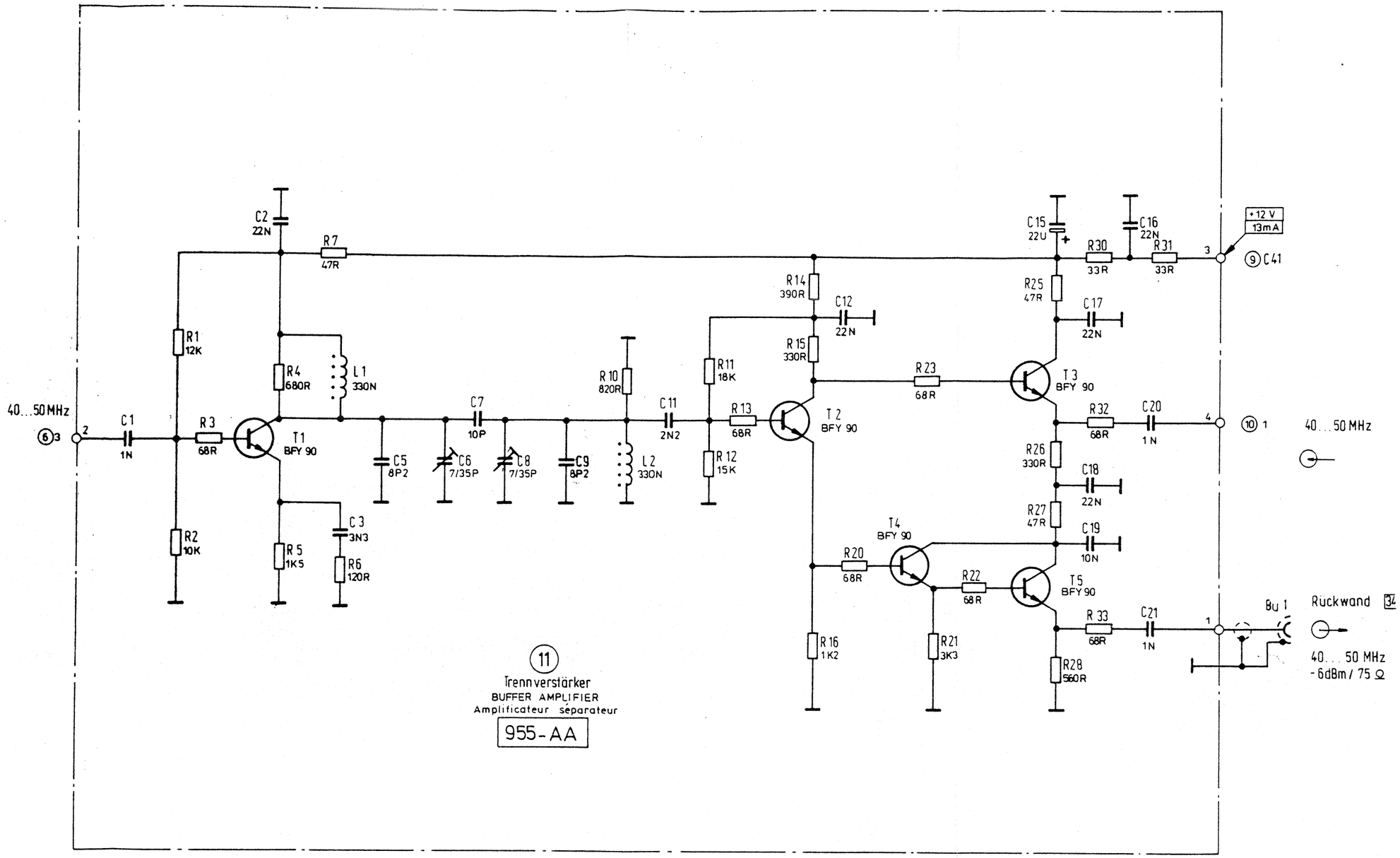

11

Trennverstärker
BUFFER AMPLIFIER
Amplificateur séparateur

955-AA

Stromlaufplan für Gerät: BN 955 / SPM-15

Trennverstärker
BUFFER AMPLIFIER
Amplificateur séparateur (11)

Serie A	Schaltteilliste :	
955-7511.014 / 3 1a		..1... Blatt Blatt-Nr.:..

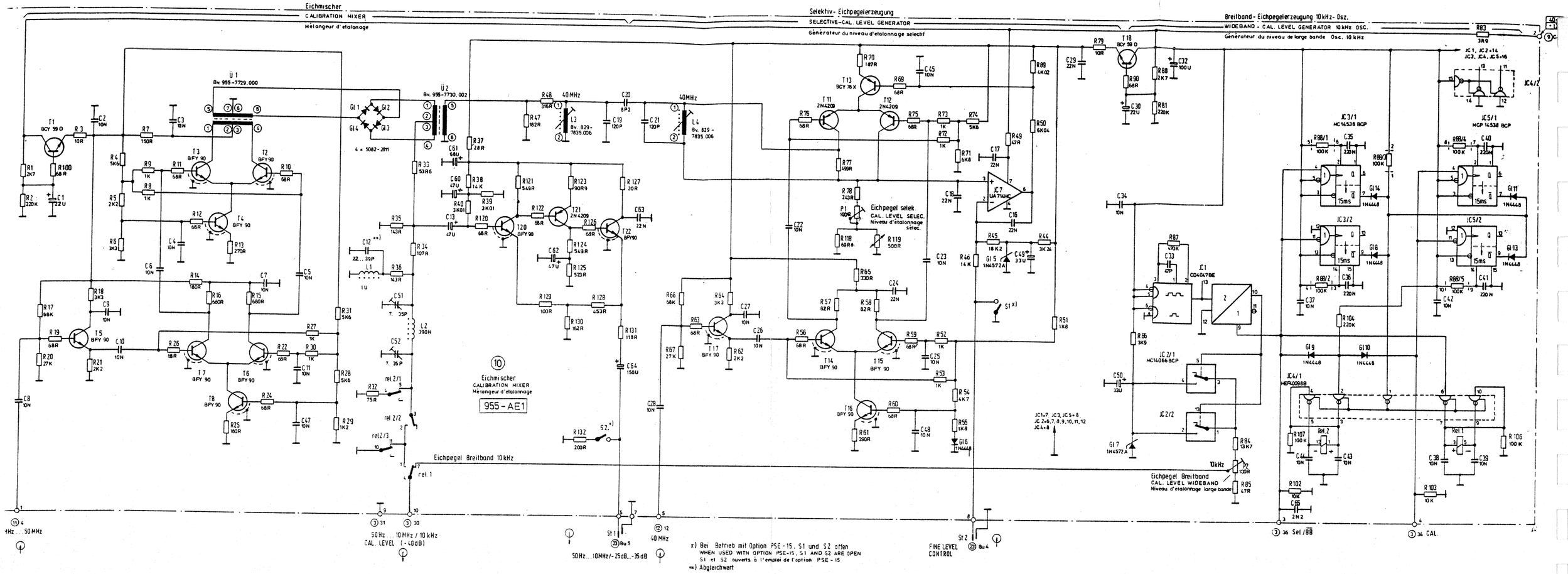

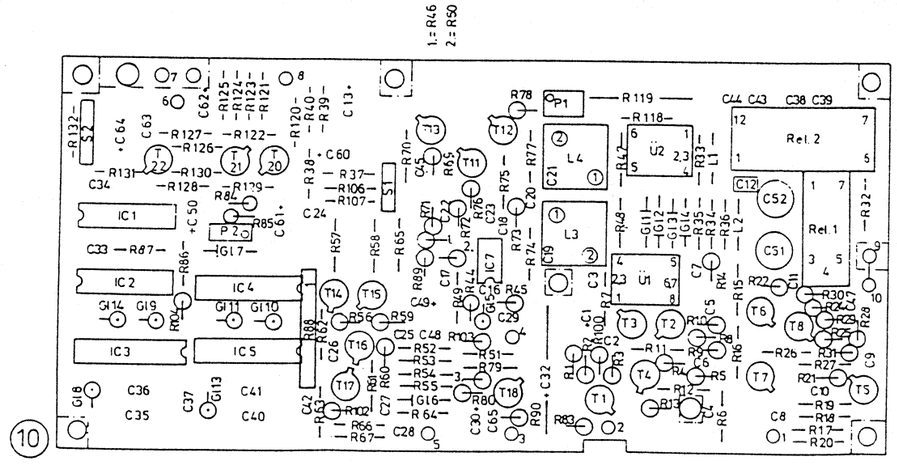

Benennung:
Eichmischer
CALIBRATION MIXER
Mélangeur d'étalonnage
955-AE1
955-7029.001/4

Eichmischer
CALIBRATION MIXER
Mélangeur d'étalonnage
Serie E
BN 955/SPM-15
955-7510.031/33

Hinweis: Seite 15-17 entfallen

N.B.: p. 15-17 have been omitted

Note: les pages 15 à 17 sont supprimées

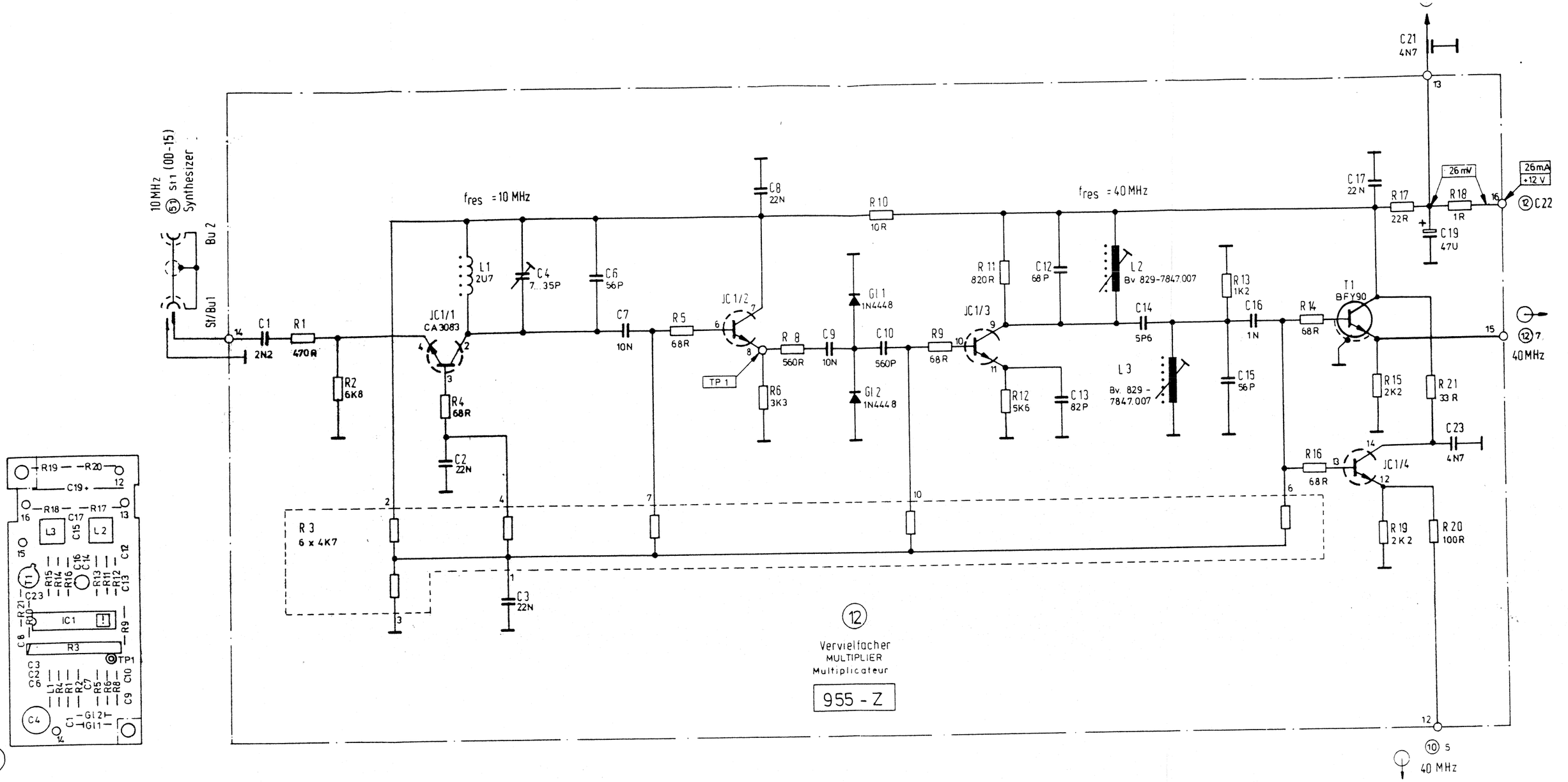

Benennung:	
Vervielfacher MULTIPLIER Multiplicateur	955 - Z
955-7024.00614	3

Stromlaufplan 12 für Gerät: SPM-15 / BN 955 40,01 MHz Erzeugung 40,01 MHz GENERATION Génération 40.01 MHz	Serie E... 955 - 7512.026/3	3 Blatt Blatt-Nr. 1

Mischer
MIXER
Mélangeur

JC4
SRA-1

+12 V

⑫16

C22 4N7

40 MHz ⑫15

C20 1N

R34 470R

R45 82R

40,00 MHz

40,01 MHz

C34 1N

R47 47R

R49 47R

C33 22N

T10 BFY 90

R54 68R

R55 2K7

T11 BFY 90

R57 8K2

R50 2K2

R56 68R

C36 10N

R58 15K

R59 390R

R69 1R

⑫C44

⑫2 40,01 MHz

R46 100R

C35 22U

R51 47R

C31 22N

R52 47K

R48 5K6

C30 2N2

C32 1U

R53 47K

JC 5 LM 393 N

R60 4K7

10 kHz

C37 1U

R62 220R

JC7/1 MC 14066

JC7/2

TP 2

R67 6K04

R65 8K06

JC7/3

JC7/4

R43 10R

R68 6K04

C40 22N

C27 22N

⑫3

JC6/1 MC 14538 BCB

JC6/2

C38 3N3

R61 5K6

R66 22K

C39 470 P

t_{S1} = 20 µs

t_{S2} = 15 µs

St2

⑫52 St1 (OD-15) 10 kHz

Bu 3

Bu 4

⑫

40,01 MHz - PLL

955-Y

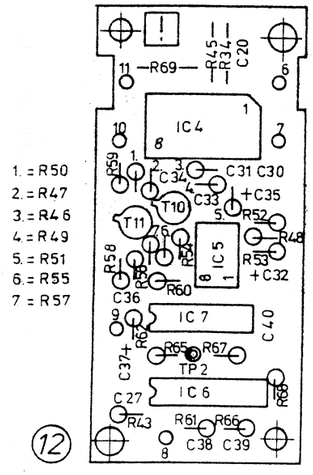

1. = R50
2. = R47
3. = R46
4. = R49
5. = R51
6. = R55
7. = R57

Benennung:

40,01 MHz PLL 955-Y

955-7023.00714 a

Stromlaufplan für Gerät: BN 955/SPM-15

40,01 MHz Erzeugung
40,01 MHz GENERATION
Génération 40,01 MHz

⑫

Serie E ... | Schaltteilliste:

955-7512.026/3

...3... Blatt | Blatt-Nr. 2. | 1

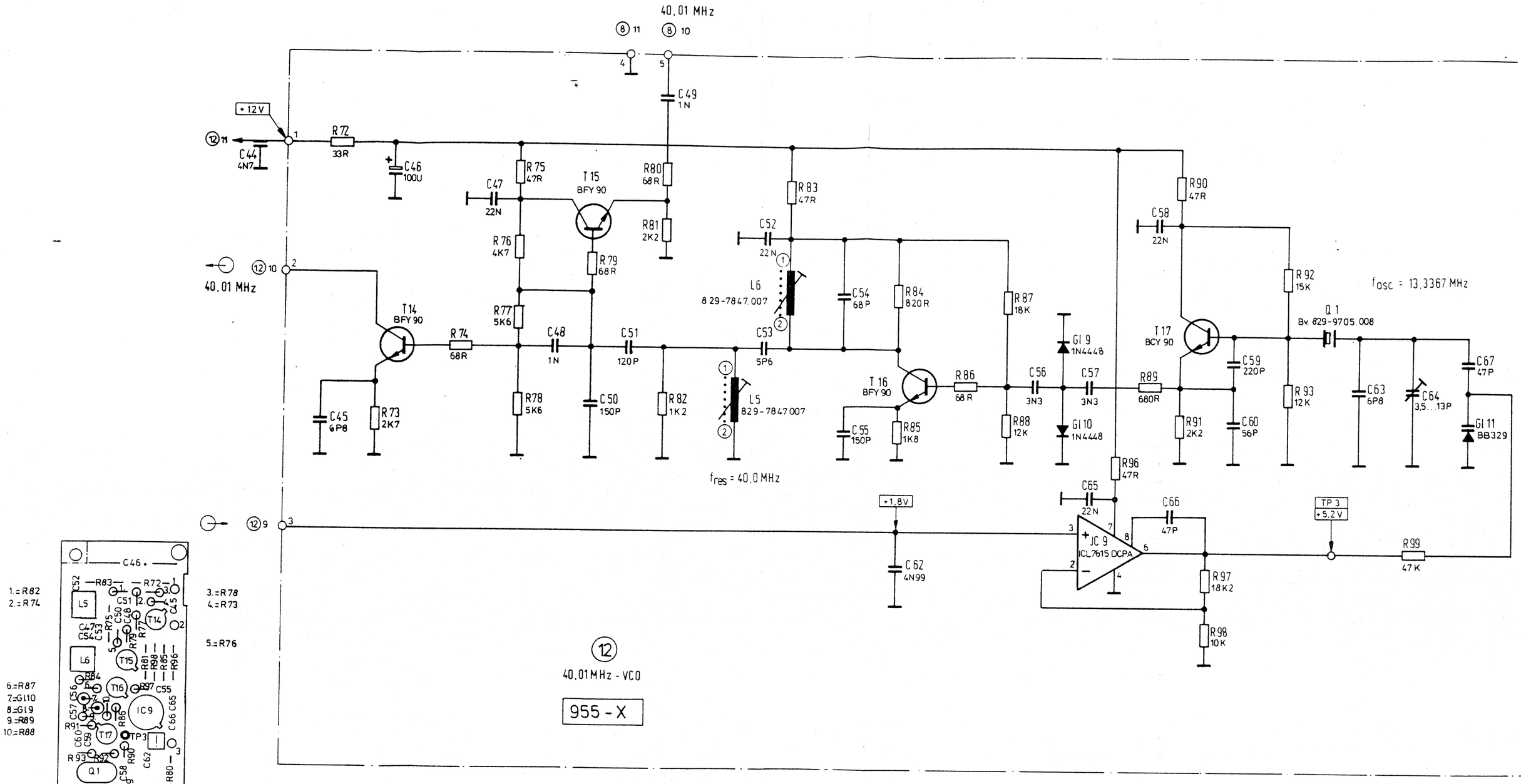

Benennung:

40,01 MHz-VCO 955-X

955-7022.00814 2

20

Stromlaufplan für Gerät: BN 955 / SPM-15

40,01 MHz Erzeuger
40,01 MHz GENERATION
Génération 40,01 MHz

⑫

Serie E	Schaltteilliste:	
955-7512.026/3	1	..3.. Blatt Blatt-Nr..3..

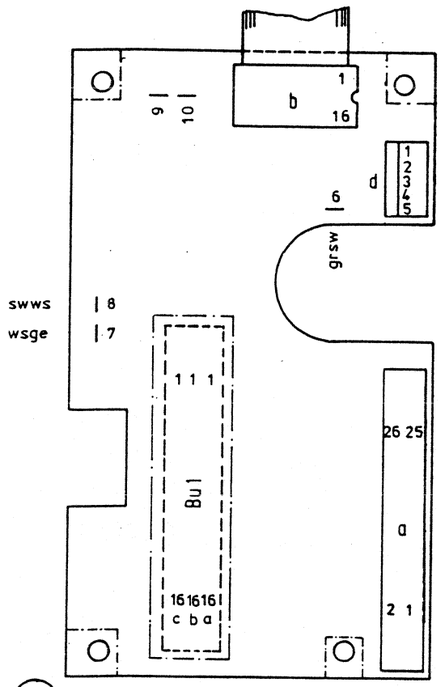

14

Schnittstelle	
INTERFACE	955-AM1
Interface	955-AM2
955-7036.00714	4

14

Schnittstelle
INTERFACE
Interface

955-AM1
955-AM2

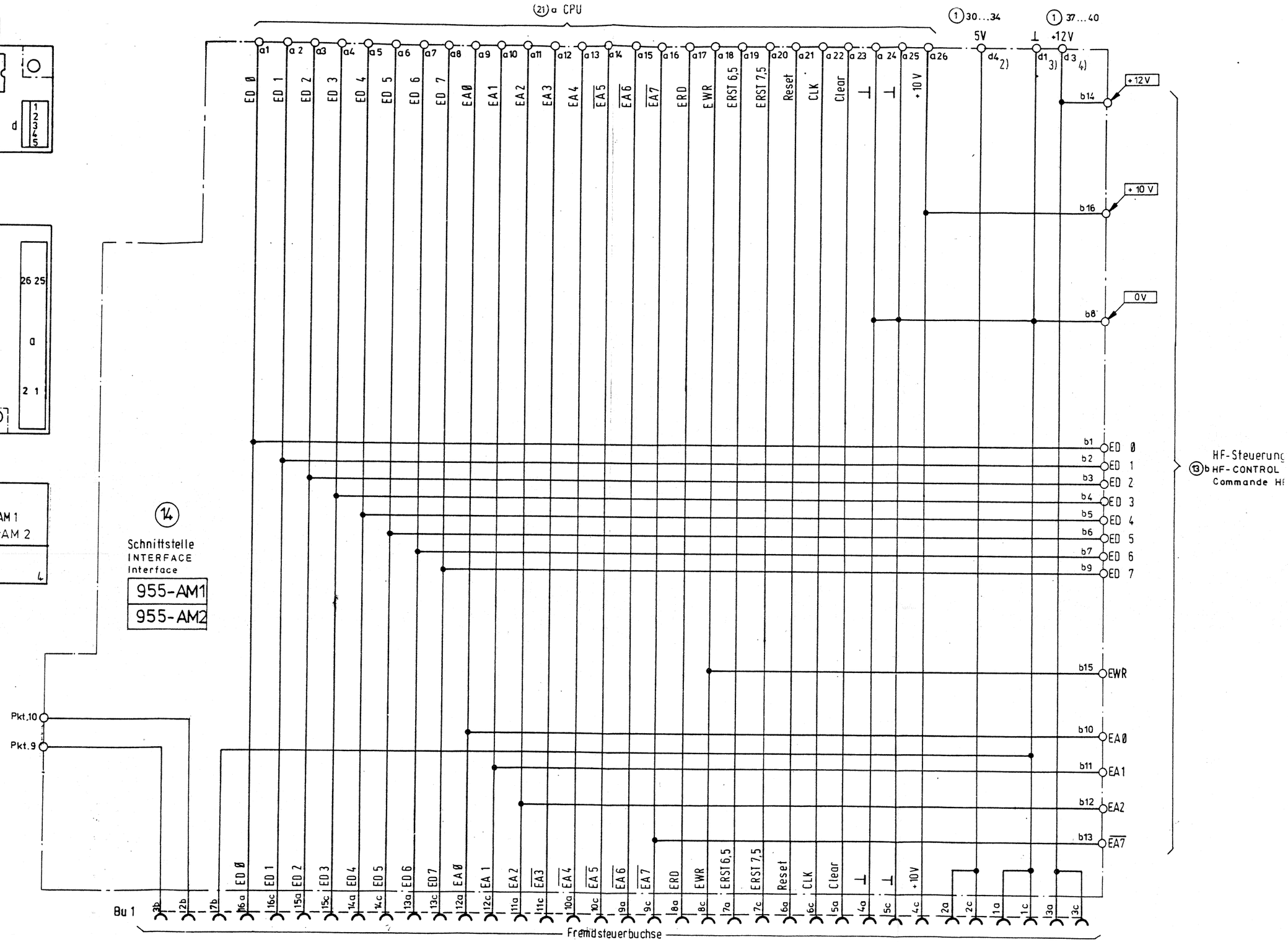

Stromlaufplan	für Gerät: SPM-15/.BN 955	Serie M ...	Schaltteilliste:
Schnittstelle INTERFACE Interface	14	955-7514.024/3	...1.. Blatt Blatt-Nr.../ 1

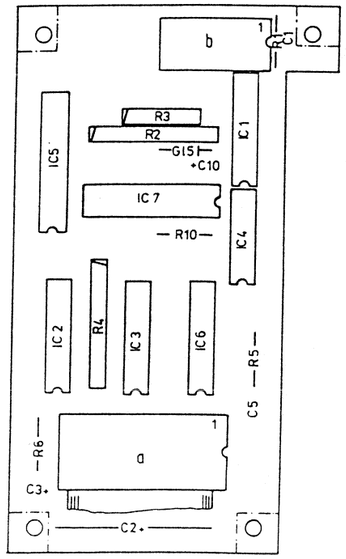

HF-Steuerung
HF-CONTROL
Commande HF
955-E1

955-7004.00014

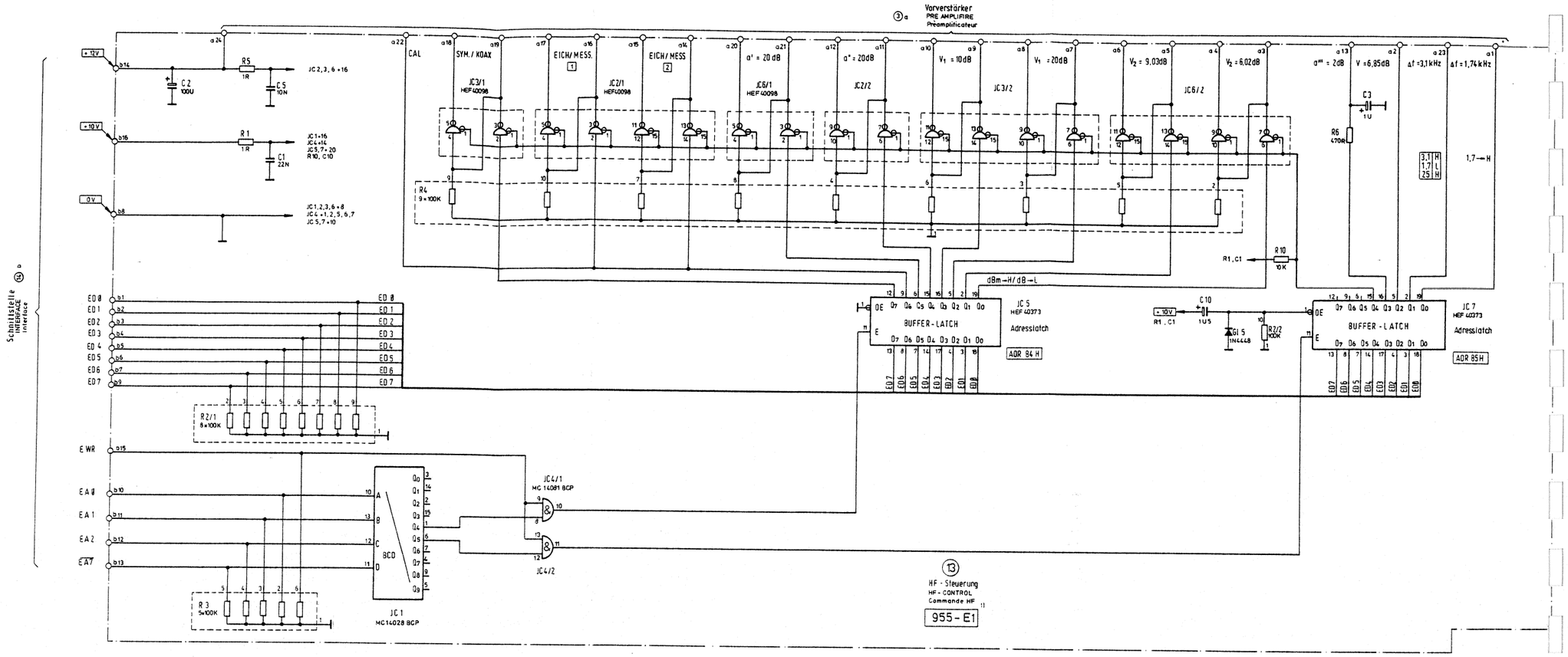

Serienanmerkung:
SERIES MODIFICATIONS
Modification de série

1) Serie A u. B: 955-E

HF-Steuerung
HF-CONTROL
Commande HF

Serie A

955-7513.012/33

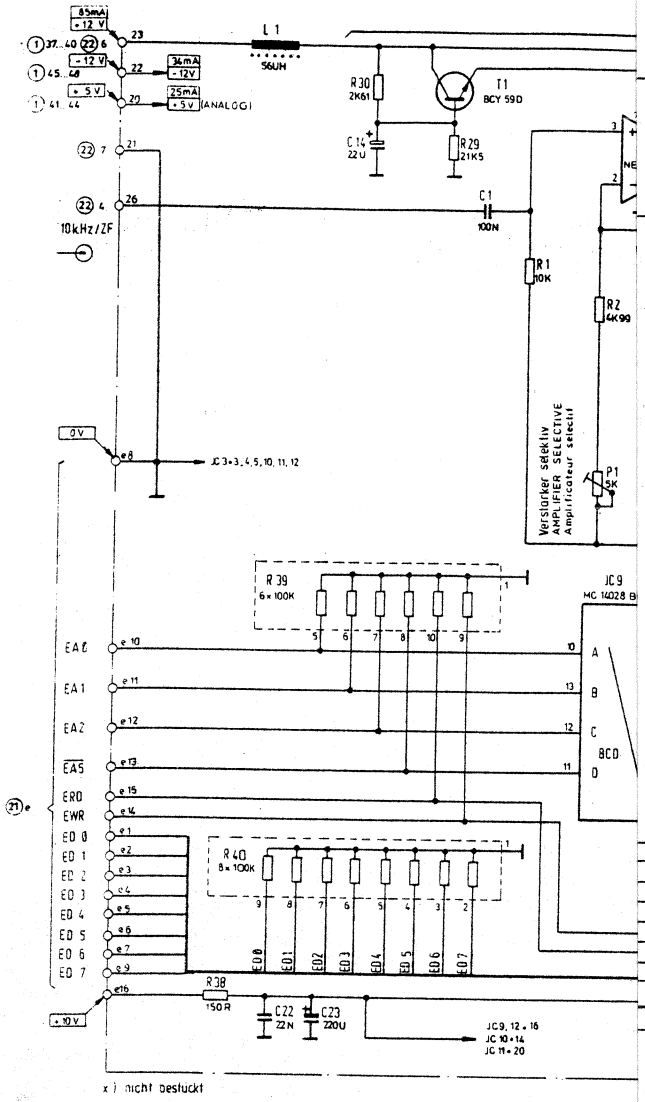

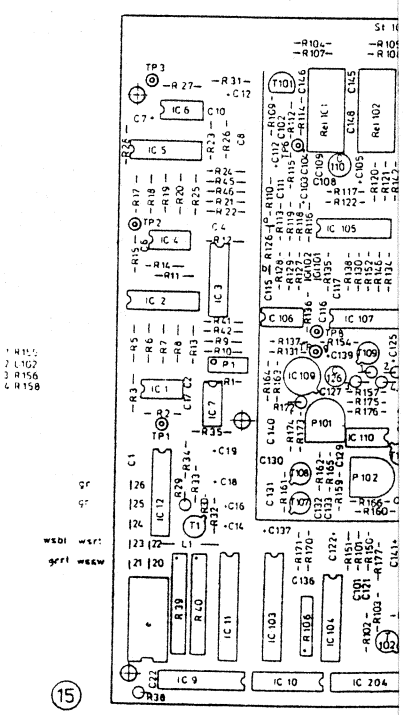

ZF - Auswertung I F - EVALUATION Evaluation FI	15
Serie A...	955 - 7515

1. R155
2. L102
3. R156
4. R158

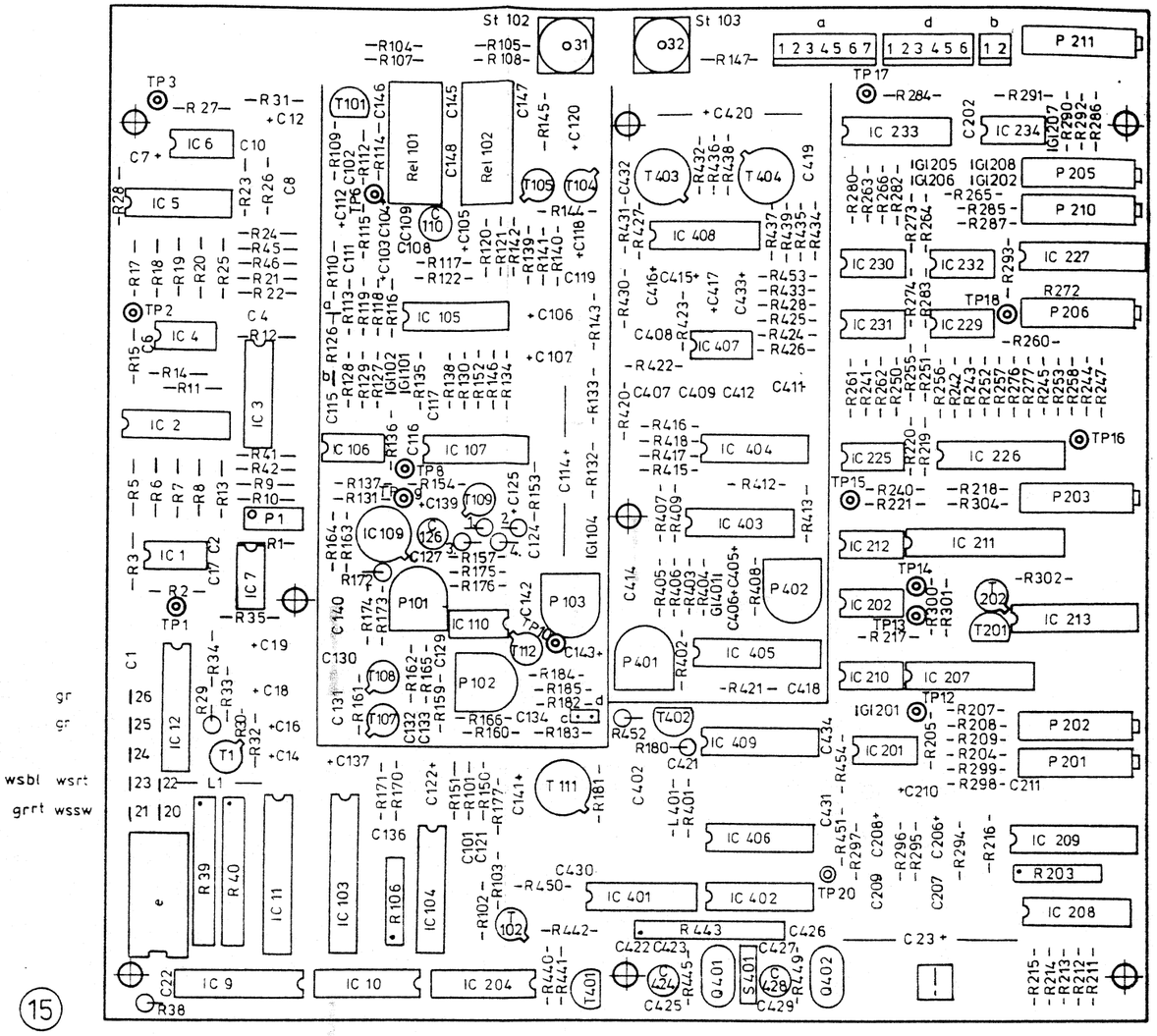

Benennung:
ZF-Auswertung
EVALUATION IF 955-J
Evaluation FI
955-7008.00613 6

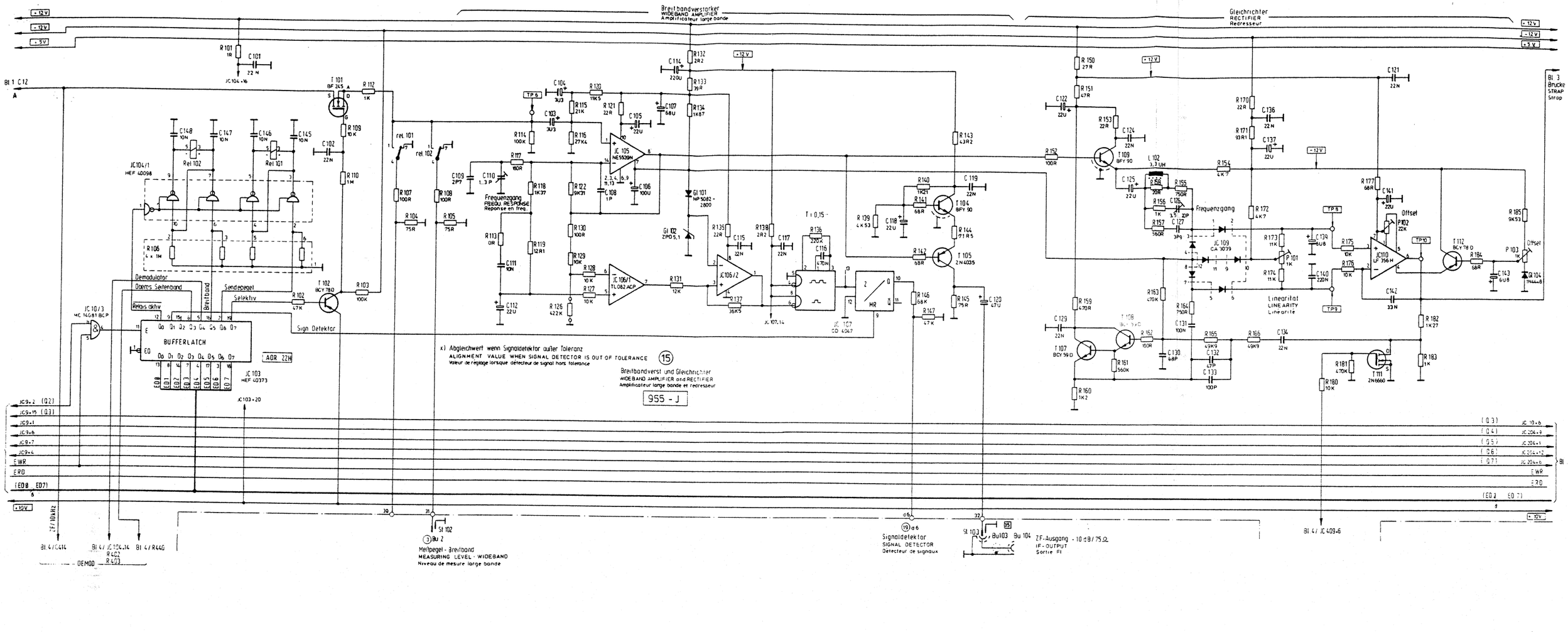

ZF - Auswertung I F - EVALUATION Evaluation FI	15	Serie A	SPM - 15 / BN 955
		955 - 7515 . 010 / 33	4 Blatt Blatt-Nr. 2
		3	

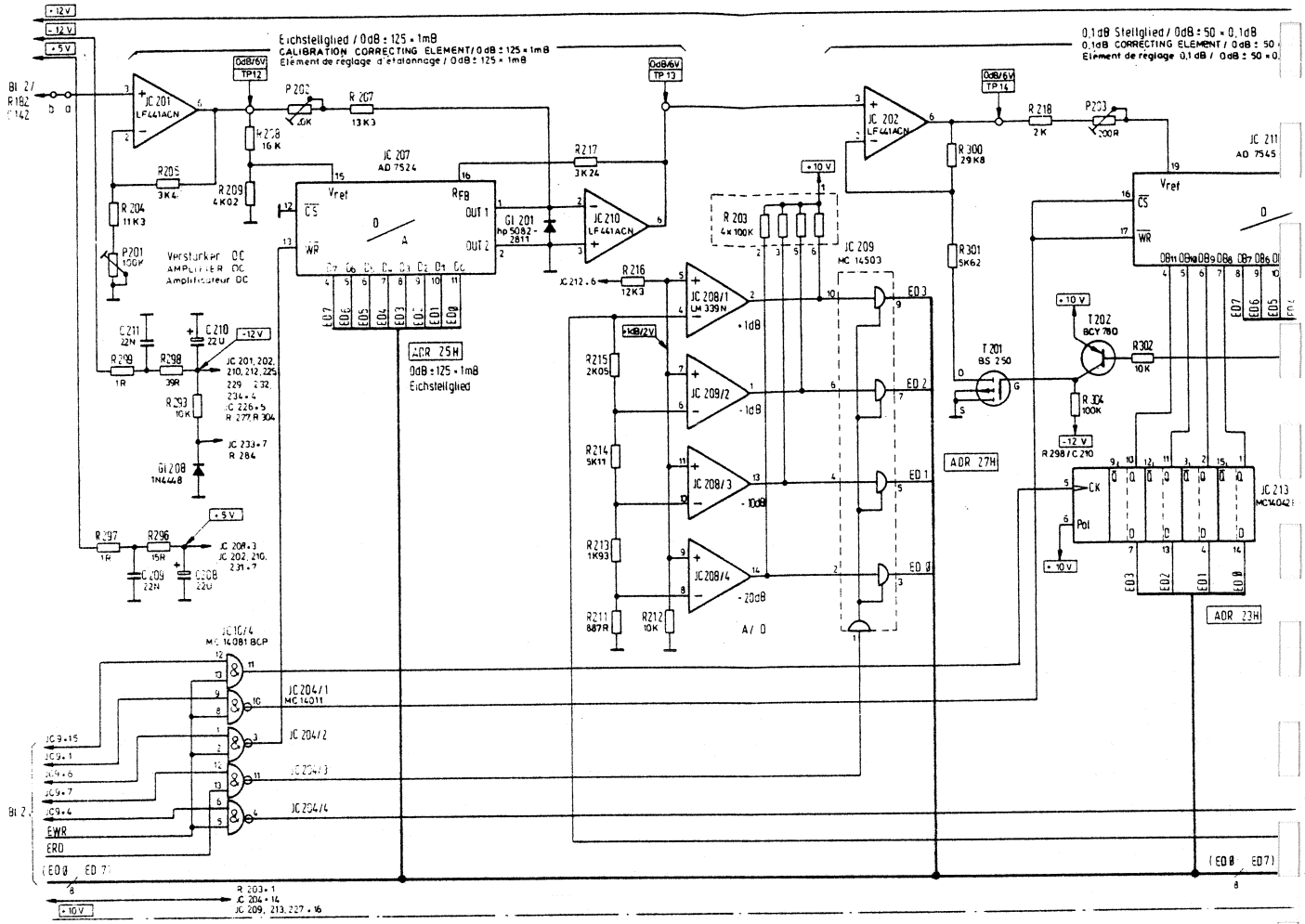

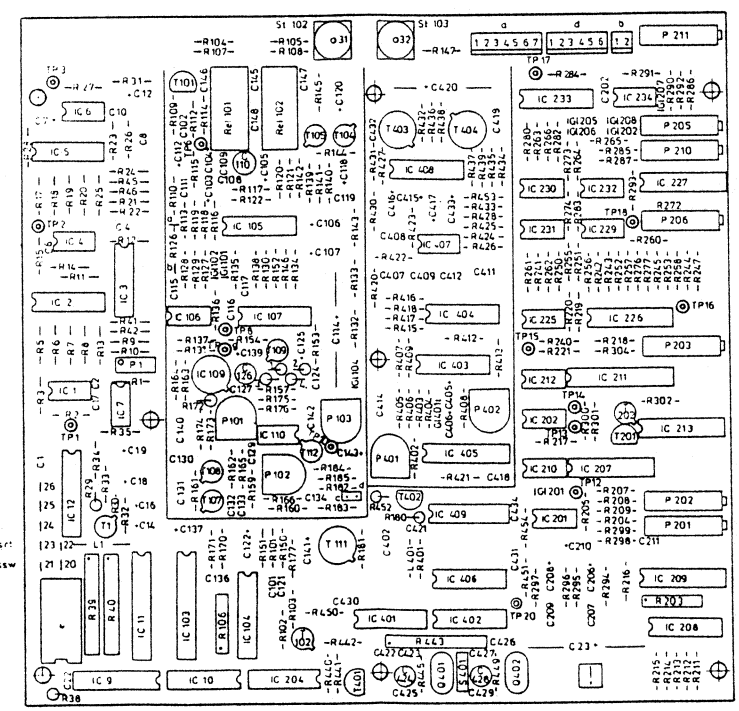

Bestückungszeichnung
Component drawings
Disposition des comp

Benennung:
ZF-Auswertung
EVALUATION IF
Evaluation FI

955-7008

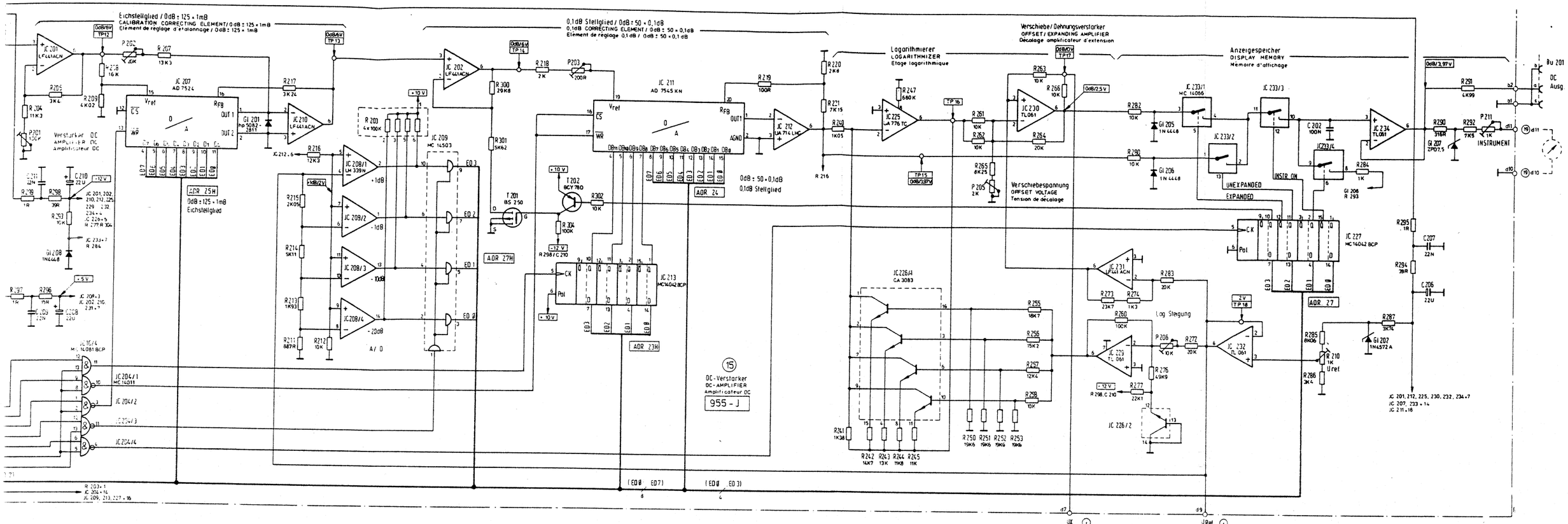

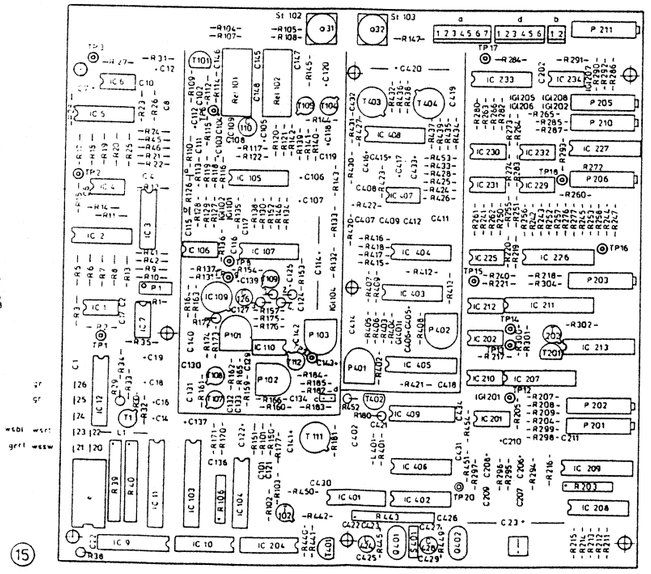

Bestückungszeichnung 1 : 1 siehe Seite 23
Component drawings are 1 : 1, see Page 23
Disposition des composants en grandeur réelle, voir page 23

Benennung	
ZF-Auswertung	
EVALUATION IF	955-J
Evaluation FI	
955-7008.00613	6

ZF - Auswertung I F - EVALUATION Evaluation FI	15	Serie A	BN955 / SPM-15
		955-7515.010 / 33	

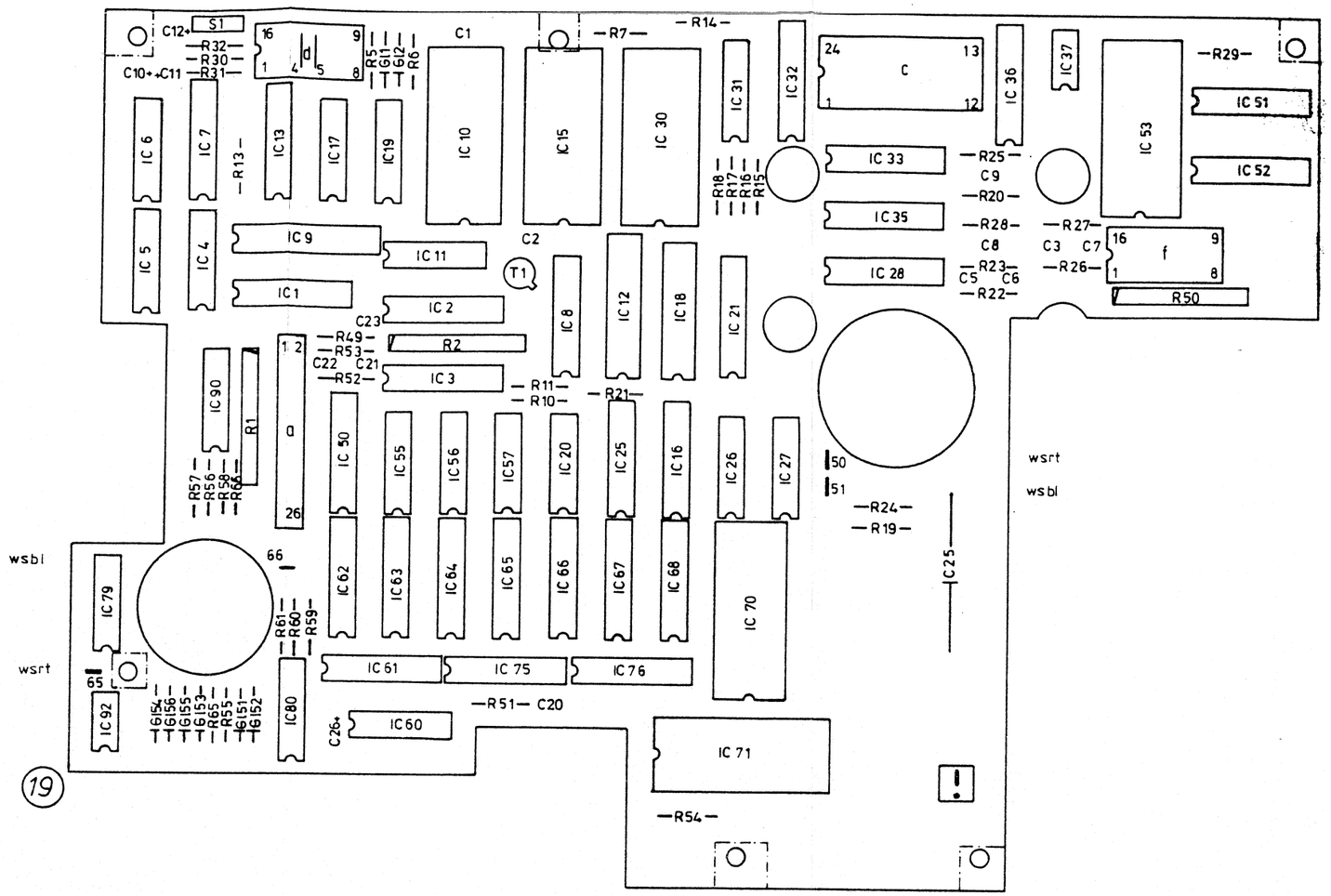

Anzeigelogik DISPLAY LOGIC Logique d'affichage	955-C
955-7002.00213	5

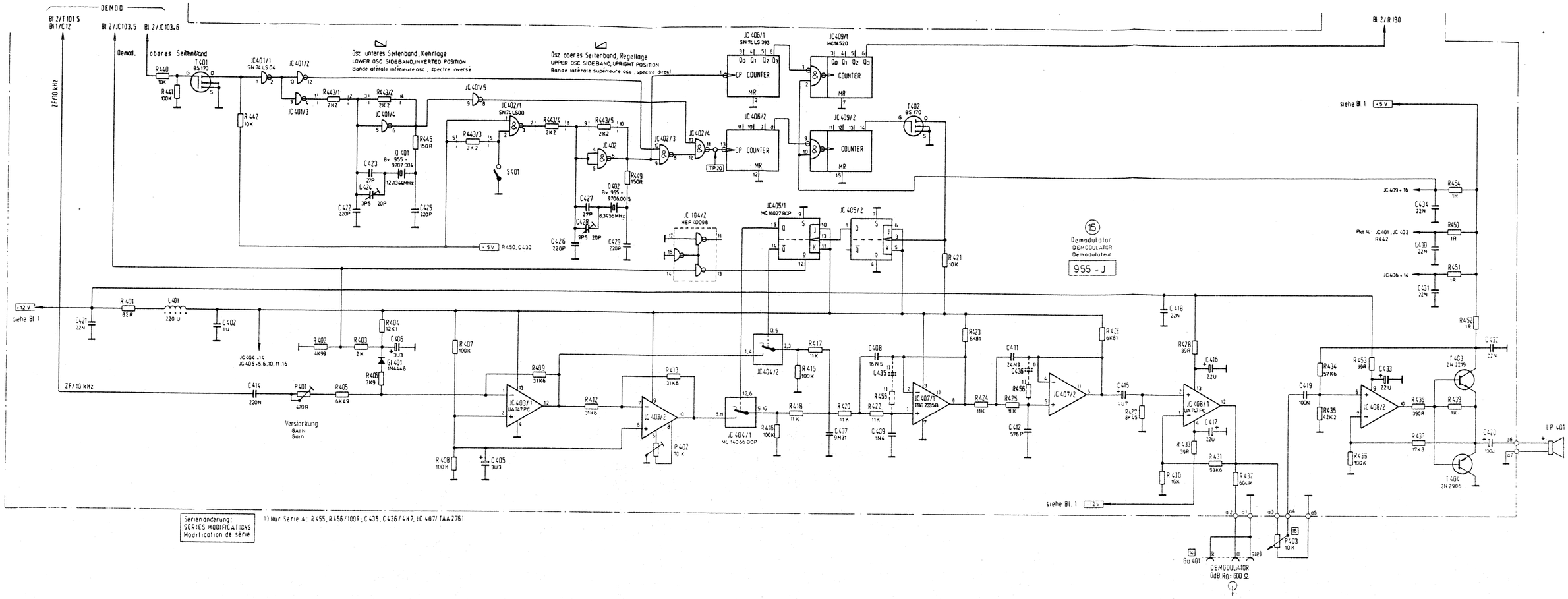

Serienänderung:
SERIES MODIFICATIONS
Modification de série

1) Nur Serie A: R 455, R 456/100R; C 435, C 436/4N7, JC 407/TAA 2761

ZF - Auswertung I.F. - EVALUATION Evaluation F.I.	15	Serie A	BN 955 / SPM-15
		955 - 7515.010 / 33	4 Blatt 3 Blatt-Nr. 4

Frequenzeinstellung
FREQUENCY SETTING
Réglage de la fréquence

Frequenzzähler
FREQUENCY COUNTER
Compteur de fréquence

Eingangsteilsteuerung
INPUT SECTION CONTROL
Commande de section entrée

Meßsignalumsetzung (A/D)

Spannungs-Frequenzumsetzer

RAM-Steuerung
RAM - CONTROL
Commande RAM

FREQUENCY INTERRUPT

LEVEL INTERRUPT

(19) Anzeigelogik
DISPLAY LOGIC
Logique d'affichage
955 - C

Anzeigelogik
DISPLAY LOGIC
Logique d'affichage

Serienanmerkung
SERIES MODIFICATION
Modification de series

1) Serie A...D: S1 entfällt/DELETED/absent

SPM - 15 / BN 955 | Serie A...

Anzeigelogik
DISPLAY LOGIC
Logique d'affichage

955 - 7519.016 / 3

19

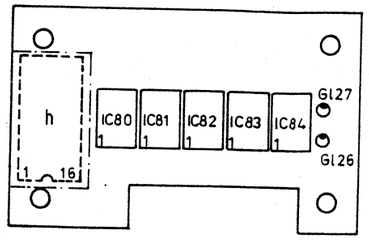

(20)

Pegelanzeige
LEVEL SELECTION 955-D
Niveau d'affichage

955-7003.00114 2

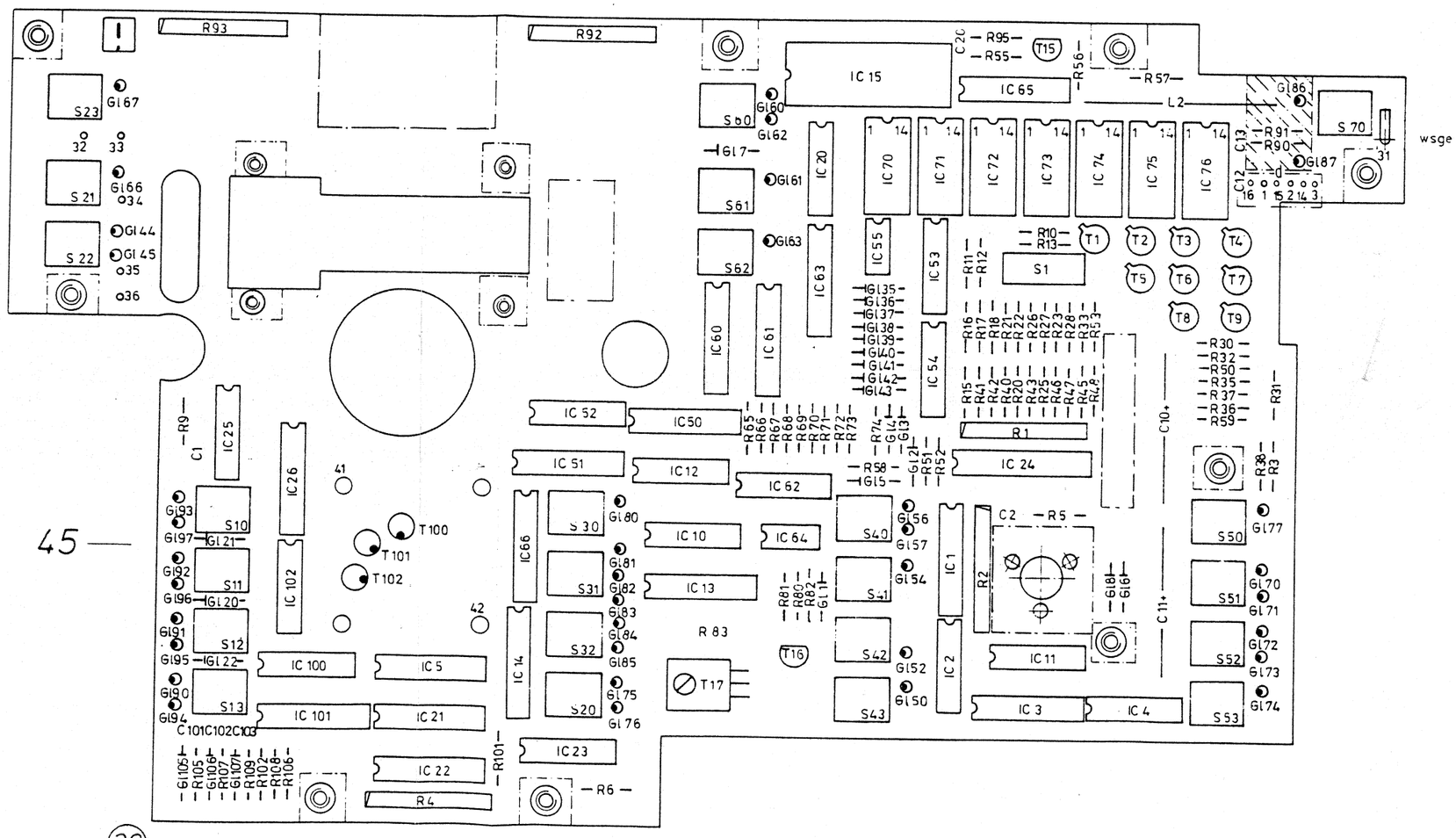

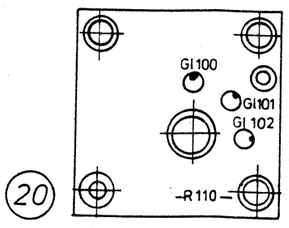

(20)

Pegelschalter
LEVEL SWITCH 955-H
Commutateur de niveau

955-7007.00714 5

Eingabeschaltung
KEYBOARD 955-B
Clavier

955-7001.00313 9

Pegelanzeige
LEVEL SELECTION
Niveau d'affichage
955 - D

Anzeige
DISPLAY
Affichage

Ansteuerung - Ziffern
CONTROL DIGITAL
Commande chiffres

Eingabeschaltung
KEY BOARD
Clavier
955 - B

Ansteuerung - Segment
CONTROL SEGMENT
Commande segment

Tastenentprellung
KEY-CONTACT DEBOUNCING
Suppression de rebond des touches

Interruptsteuerung
INTERRUPT GATE
Porte d'interruption

Eichtaktimmer
CALIBRATION CYCLE TIMER
Rythmeur d'horloge étalon

Serienanmerkung
SERIES MODIFICATIONS
Modification de série

Serie A - B
1) 955-AM1 entfällt. Pkt 31 und S2 Schleife wurde direkt verdrahtet
2) Gl 64 u. Gl 65 nur in Serie A u. B eingebaut

x) 955/04

Pegelschalter
LEVEL SWITCH
Commutateur de niveau
955 - H

SPM -15 / BN 955	Serie A...
Eingabeschaltung ENTRYCIRCUIT Circuit d'entrée	
955-7520.018/3	7 / Blatt ...

20

1 = wsrt
2 = wsbl
3 = wssw
4 = grrt
5 = ws
6 = fl *)
7 = grrt

*) Serie A...H : grbl

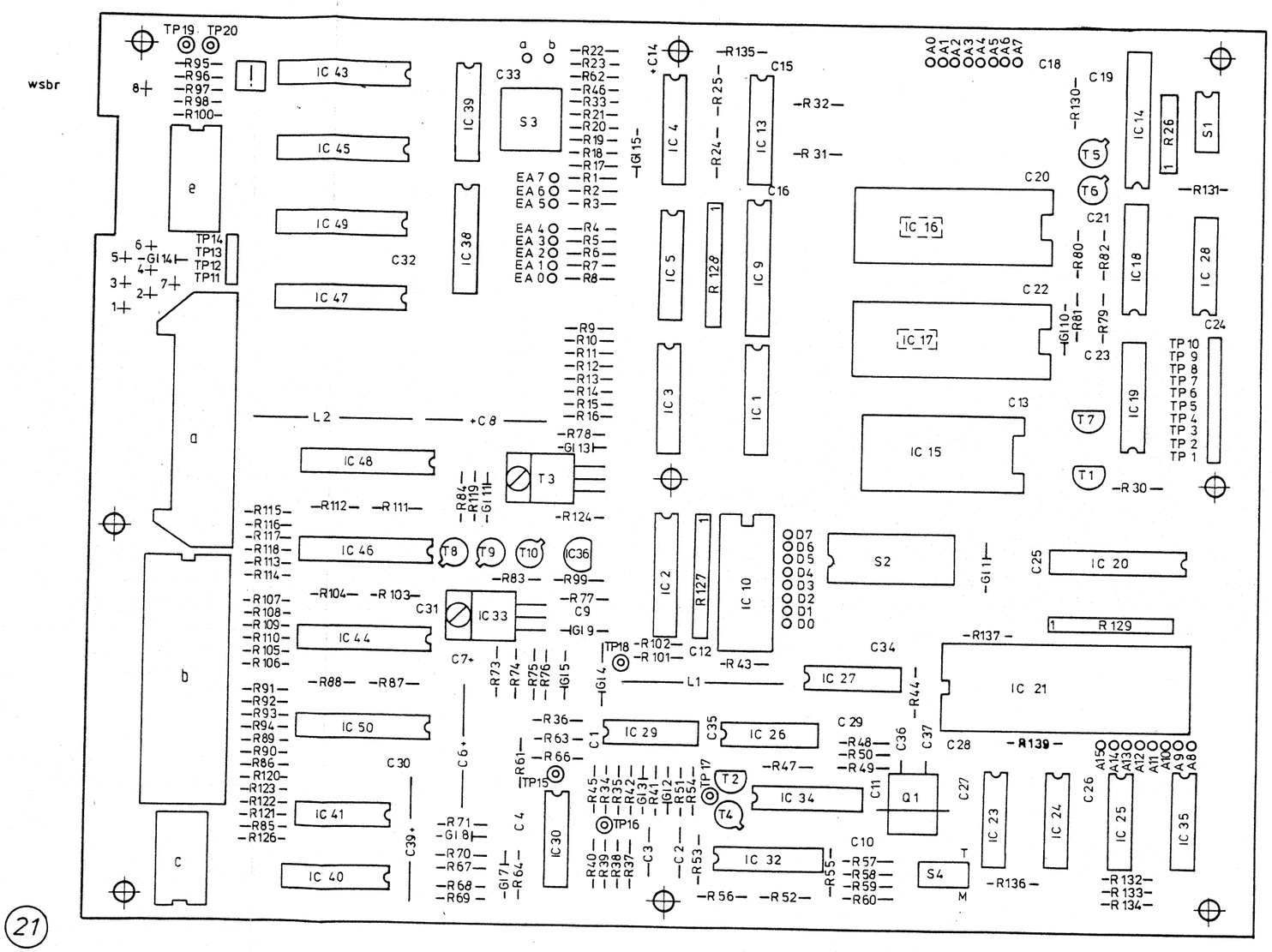

21

Beachte: T1, T2, T7 sind wie folgt zu bestücken:

bei Typ VN 10 LM

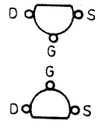

bei Typ BS 170

Benennung:	
CPU-Karte	955-F
CPU-CARD	955-F1
Carte calculateur	955-F2

955-7005.00913 10

Digitale Ansteuerung 00-15
DIGITAL DRIVE SIGNAL
Commande numérique

Anpassung Instrumentenbus
ADAPTION INSTRUMENT BUS
Adaption businstrument

Spannungsüberwachung
VOLTAGE MONITORING
Contrôle de tension

Rechner Kern
CPU CORE
CPU

OPERATING MODE	S1.4	S1.3	S1.2	S1.1
Normal	ON	ON	ON	ON
Test	ON	ON	ON	OFF
RAM Test	ON	ON	OFF	ON
IO Test	ON	ON	OFF	OFF
Synth Test	ON	OFF	ON	ON

21
CPU - Karte
CPU - CARD
Carte - CPU

955 - F
955 - F1
955 - F2

Serienanmerkung
SERIES MODIFICATIONS
Modification de série

1) Serie

x) Programmiert und bestückt nach Programmpaket 955 - 0430.008/5
PROGRAMMED AND ASSEMBLED ACCORDING TO PROGRAM PACKAGE
Programmé et équipé suivant ensemble de logiciel

Bestückungszeichnung siehe Seite
FOR ASSEMBLY MARKINGS SEE PAGE
Schema d'implantation voir page

Gleichspannungen gegen Masse
ALL VOLTAGE RATINGS MEASURED WITH RESPECT TO 0 V
Toutes les tensions données sont mesurées par rapport à 0 V

Buchsenbelegung siehe
FOR CONNECTOR ARRANGEMENT SEE
Câblage des connecteurs voir

SPM-15/BN 955	Serie M	Ausg.
CPU - Karte CPU - CARD Carte - CPU	21	1 Blatt Blatt 1
955 - 7521.059/ 3	1	FF

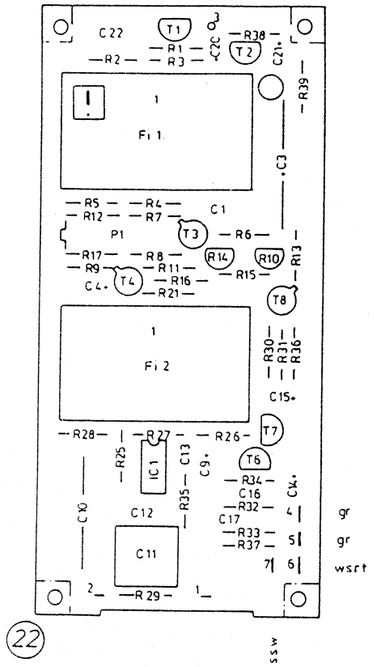

22

Benennung:	
10kHz Bandpaß/25Hz mech.	
10kHz BANDPASS/25Hz MEC.	955-K
Passe bande 10kHz/25Hz mec.	
955-7009.00514	1a

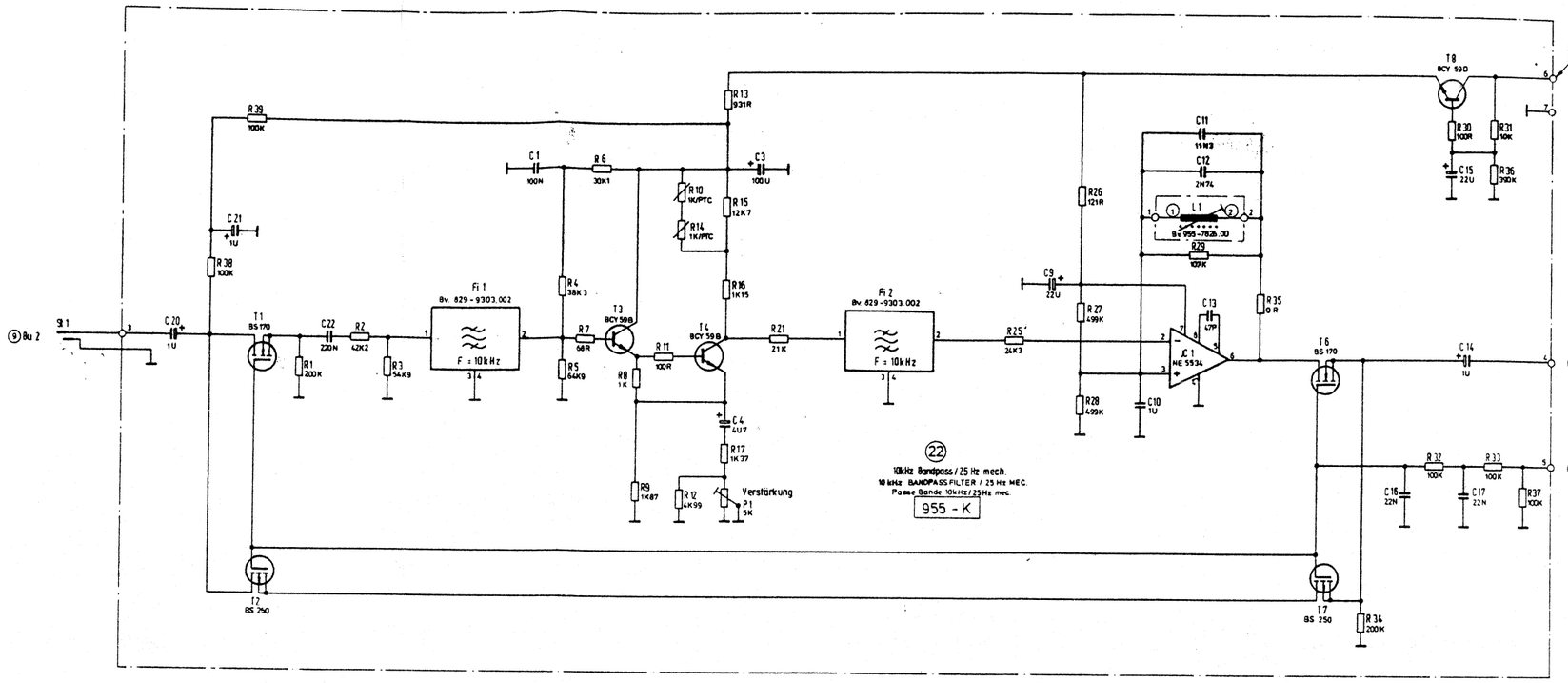

10 kHz Bandpass / 25 Hz mech. 10 kHz BANDPASS FILTER / 25 Hz MEC. (22) Passe bande 10 kHz / 25 Hz mec.	Serie A	SPM-15 / BN 955	
	955-7522.016 / 33		

Bestückungszeichnung, Stromlaufplan (23) (Mitlaufsender PSE-15) siehe unter Option BN 955/00.02.

Assembly drawing + circuit diagram (23) (Tracking Generator PSE-15) see under Option BN 955/00.02.

Schéma de disposition des composants + schéma de principe (23) (Générateur suiveur PSE-15) voir option BN 955/00.02.

Bestückungszeichnung, Stromlaufplan (24) (<IEC 625>-Bus Anpassung) siehe unter Option BN 955/00.03.

Assembly drawing + circuit diagram (24) (<IEC 625> Bus Converter) see under Option BN 955/00.03.

Schéma de disposition des composants + schéma de principe (24) (adaptation bus <IEC 625>) voir option BN 955/00.03.

1.1 Synthesizer OD-15 BN 2011/01
1.1 Synthesizer OD-15 BN 2011/01
1.1 Synthétiseur OD-15 BN 2011/01

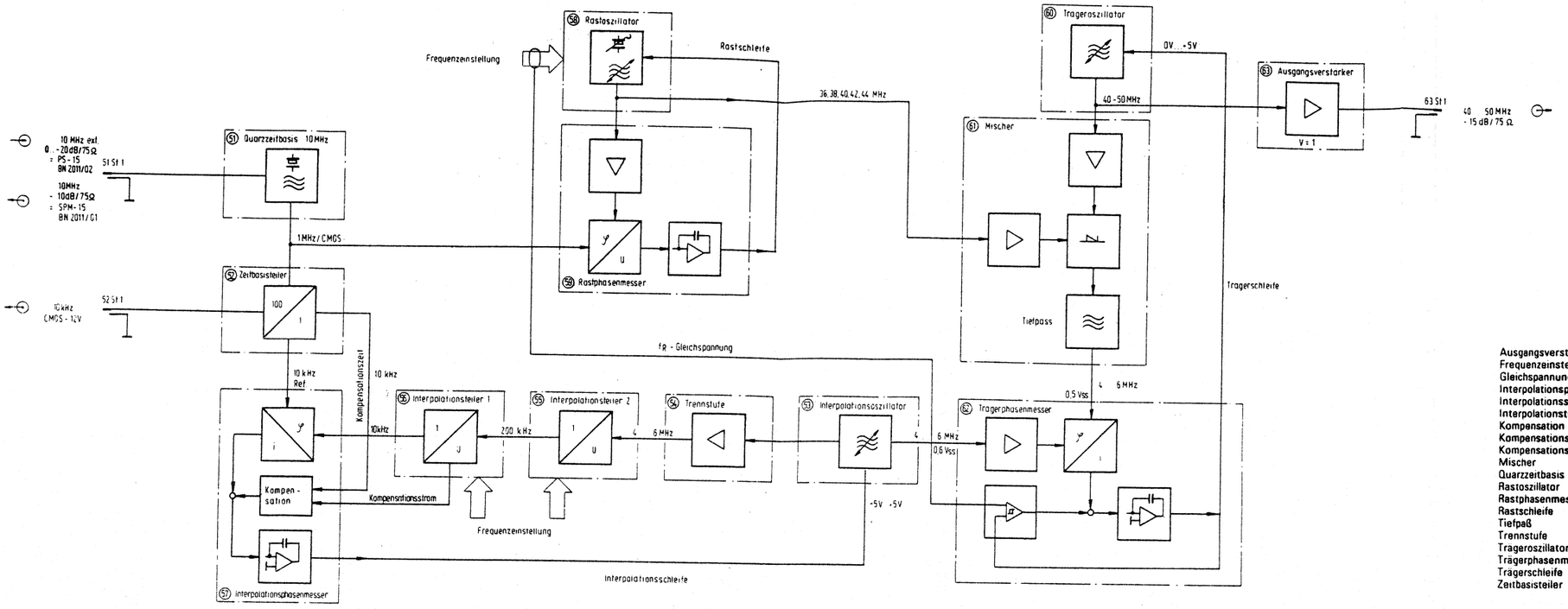

Ausgangsverstärker	OUTPUT AMPLIFIER	Amplificateur de sortie
Frequenzeinstellung	FREQUENCY SETTING	Réglage de la fréquence
Gleichspannung	D.C.-VOLTAGE	Tension continue
Interpolationsphasenmesser	INTERPOLATION PHASE METER	Phasemètre d'interpolation
Interpolationsschleife	INTERPOLATION LOOP	Bande d'interpolation
Interpolationsteiler	INTERPOLATION DIVIDER	Diviseur d'interpolation
Kompensation	COMPENSATION	Compensation
Kompensationszeit	COMPENSATION TIME	Durée de compensation
Kompensationsstrom	COMPENSATION CURRENT	Courant de compensation
Mischer	MIXER	Mélangeur
Quarzzeitbasis	CRYSTAL TIME BASE	Base de temps à quartz
Rastoszillator	LOCKING OSCILLATOR	Oscillateur verrouillage
Rastphasenmesser	LOCKING PHASE METER	Phasemètre de verrouillage
Rastschleife	LOCKING LOOP	Boucle de verrouillage
Tiefpaß	LOW-PASS FILTER	Filtre passe-bas
Trennstufe	BUFFER STAGE	Séparateur
Trageroszillator	CARRIER OSCILLATOR	Oscillateur de porteur
Trägerphasenmesser	CARRIER PHASE METER	Niveau de porteur
Trägerschleife	CARRIER LOOP	Boucle de porteur
Zeitbasisteiler	TIME BASE DIVIDER	Diviseur de base de temps

Gleichspannung gegen Masse, Instrument ... 100 kΩ/ V
AL VOLTAGE RATINGS MEASURED WITH RESPECT TO 0 V WITH 100 KΩ/ V METER
Toutes les tensions données sont mesurées par rapport à 0 V avec un instrument de 100 kΩ/ V

Blockschaltplan
BLOCK DIAGRAM
Schéma synoptique

Serie A... | 30-15/BN 2011/01 /02

2011 - 7500.017 / 33

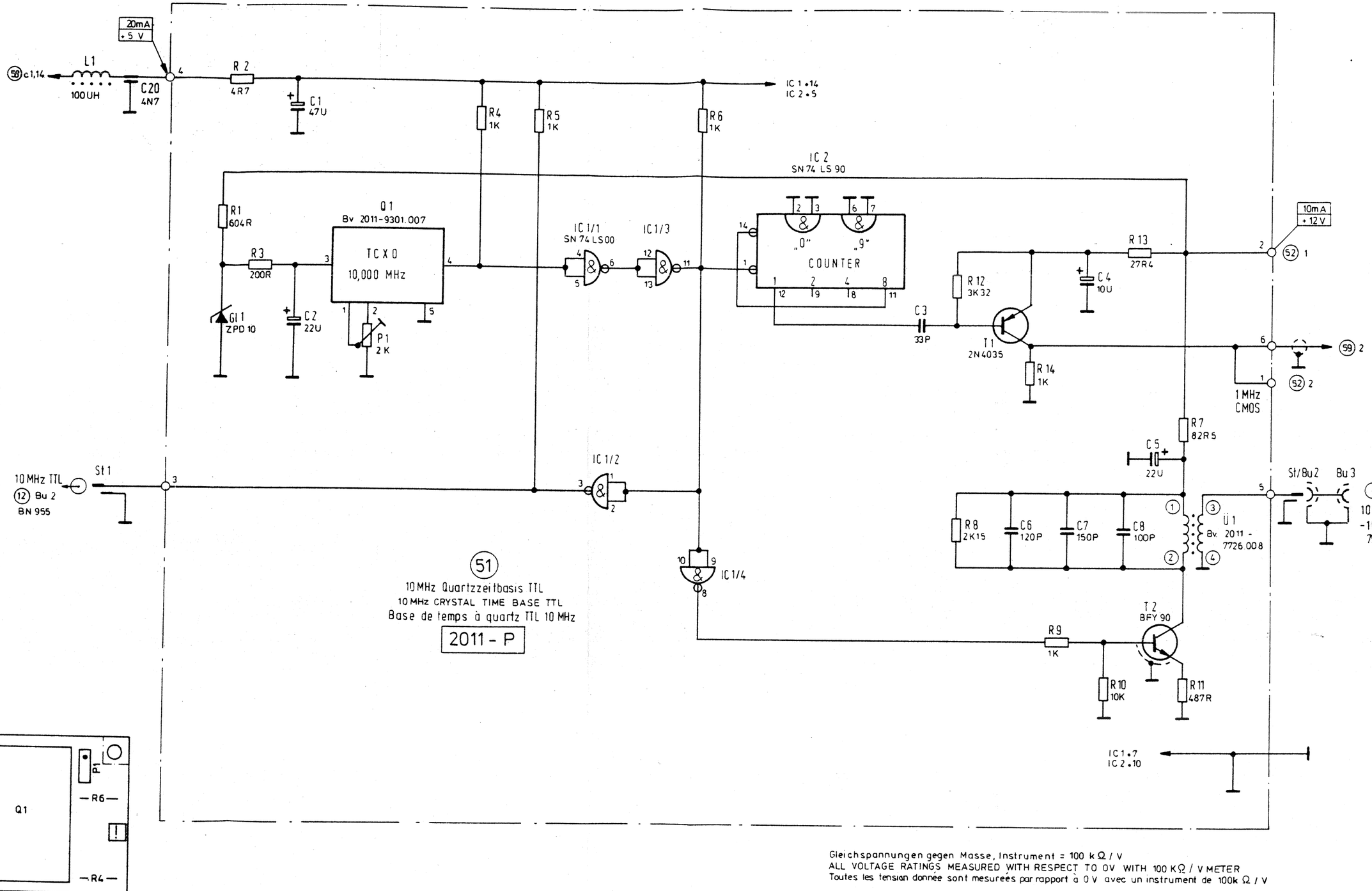

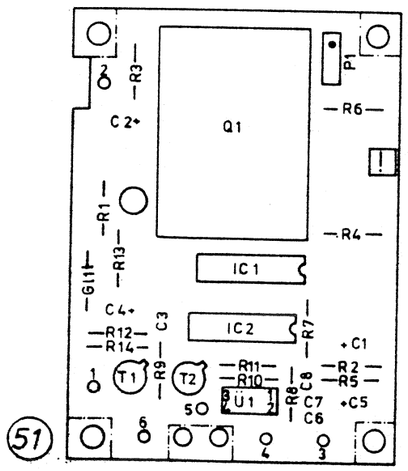

Gleichspannungen gegen Masse, Instrument = 100 kΩ / V
ALL VOLTAGE RATINGS MEASURED WITH RESPECT TO 0V WITH 100 KΩ / V METER
Toutes les tension donnée sont mesurées par rapport à 0 V avec un instrument de 100k Ω / V

10 MHz-Quarzzeitbasis TTL 10 MHz CRYSTAL TIME BASE TTL 2011-P Base de temps à quarz 10 MHz TTL	
2011-7014.00814	3

Stromlaufplan für Gerät: 00-15 / BN 2011/01 10 MHz Quartzzeitbasis TTL 10 MHz CRYSTAL TIME BASE TTL (51) Base de temps à quartz TTL 10MHz	Serie A...	Schaltteilliste:
	2011-7551.118 / 3	...1.. Blatt Blatt-Nr...1

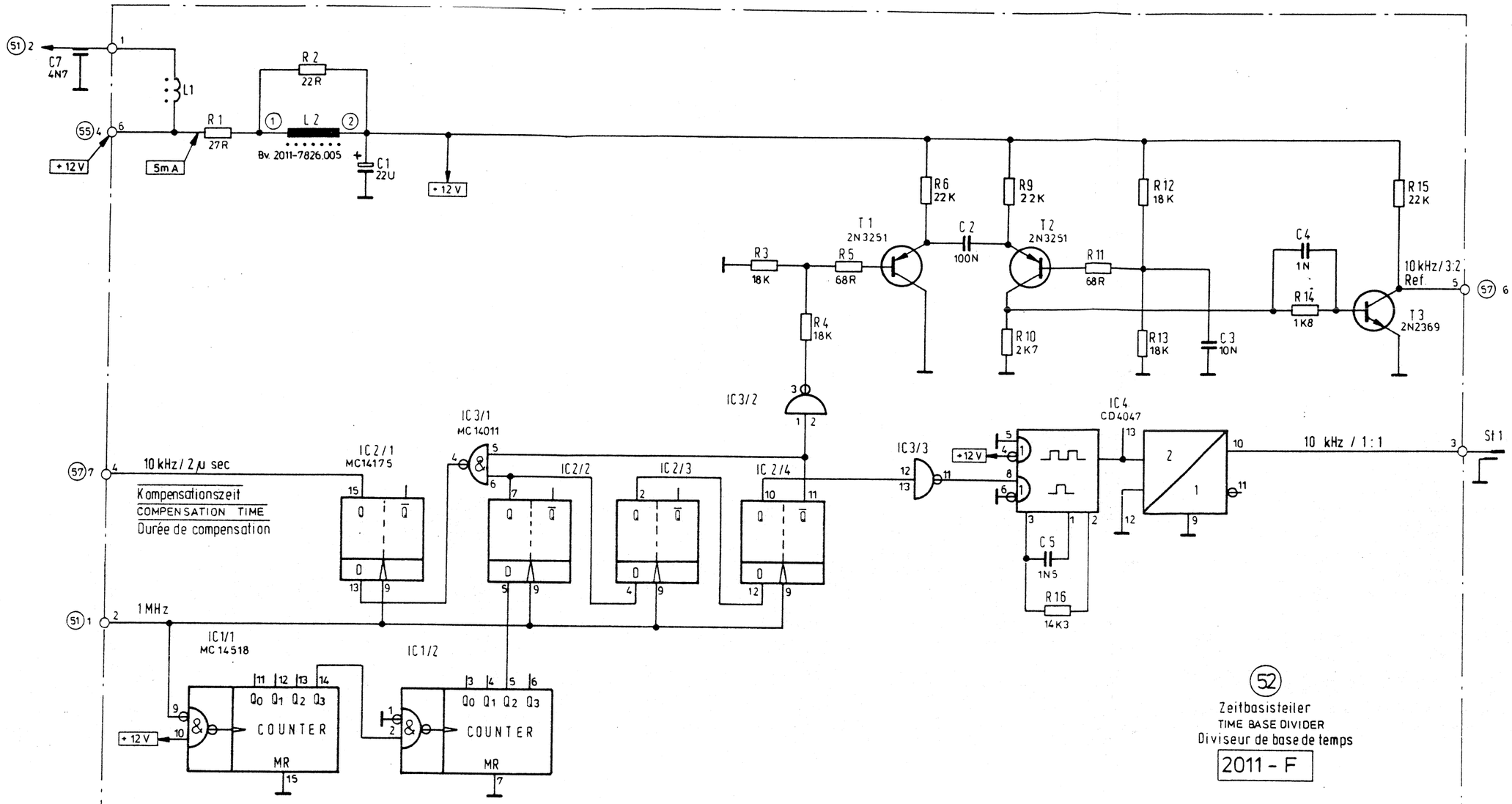

(52)
Zeitbasisteiler
TIME BASE DIVIDER
Diviseur de base de temps
2011 - F

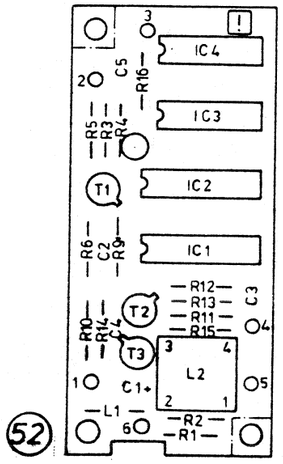

Zeitbasisteiler
TIME BASE DIVIDER 2011-F
Diviseur de base de temps

2011-7005.00414 1a

Gleichspannungen gegen Masse, Instrument = 100 kΩ/V
ALL VOLTAGE RATINGS MEASURED WITH RESPECT TO 0 V WITH 100 kΩ / V METER
Toutes les tensions données sont mesurées par rapport à 0 V avec un instrument de 100k Ω / V

Stromlaufplan für Gerät: 00-15/..BN 2011.....	Serie A...	Schaltteilliste:
Zeitbasisteiler TIME BASE DIVIDER Diviseur de base de temps (52)	2011-7552.010/3	...1... Blatt Blatt-Nr.: 1

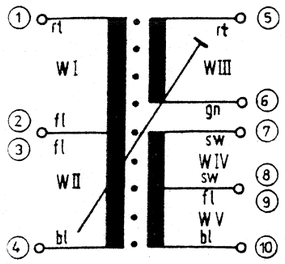

Serie A ...

Bv. 2011-7727.007/4 | 1 Blatt

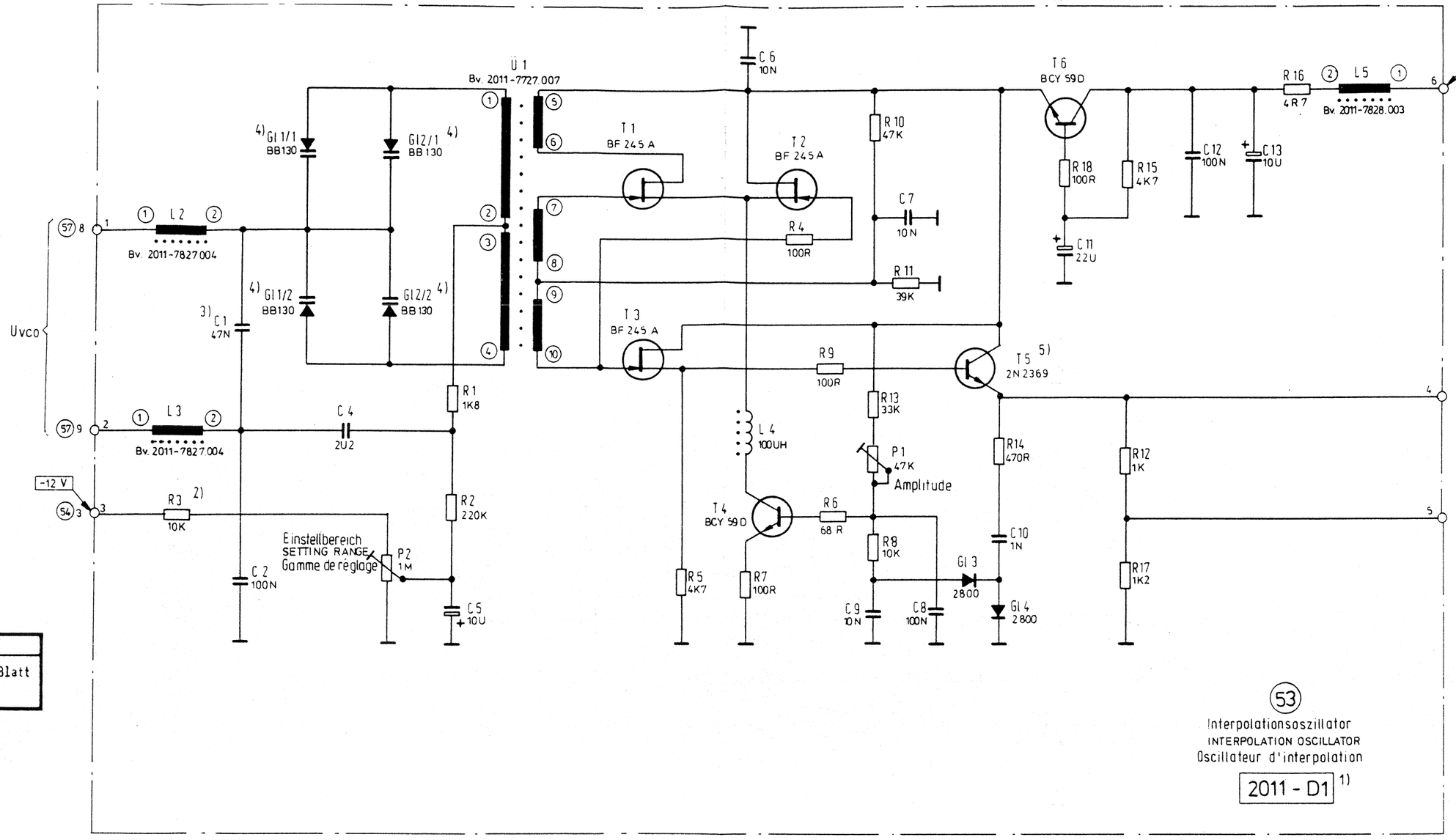

53

Interpolationsoszillator
INTERPOLATION OSCILLATOR
Oscillateur d'interpolation

2011 - D1 1)

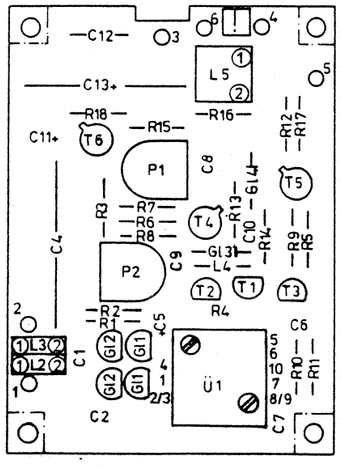

53

Serienanmerkung
SERIES MODIFICATIONS
Modification de série

Serie A: 1) 2011-D, 2) 220K, 3) 100N
4) 2× BB 113, 5) 2N3947

Gleichspannungen gegen Masse, Instrument = 100 kΩ / V
ALL VOLTAGE RATINGS MEASURED WITH RESPECT TO 0 V WITH 100 kΩ / V METER
Toutes les tensions données sont mesurées par rapport à 0 V avec un instrument de 100 kΩ / V

Bei Austausch der Platine D mit D1 müssen auf der Platine K Bauteile (R64, 65, 74) entsprechend K1 ausgetauscht werden!

WHEN BOARD D IS REPLACED BY D1, THE COMPONENTS (R64, 65, 74) ON BOARD K MUST BE CHANGED TO CONTROL THE BOARD TO K1!

Lors de l'échange de la platine D en D1, les composants (R64, 65, 74) doivent être remplacés suivant K1 sur la platine K!

Interpolationsoszillator
INTERPOLATION OSCILLATOR 2011-D1
Oscillateur d'interpolation

2011-7003.006/4

Stromlaufplan für Gerät: QD-15/BN 2011
Interpolationsoszillator
INTERPOLATION OSCILLATOR
Oscillateur d'interpolation
53

Serie A ... | Schaltteilliste:

2011-7553.019/3

1 Blatt
Blatt-Nr.

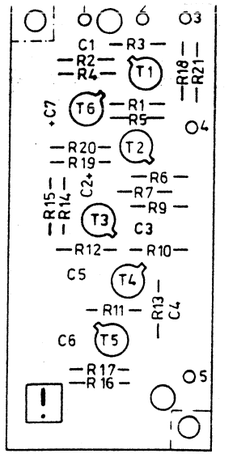

Trennstufe BUFFER STAGE Separateur	2011-H	
2011-7007.00214		1a

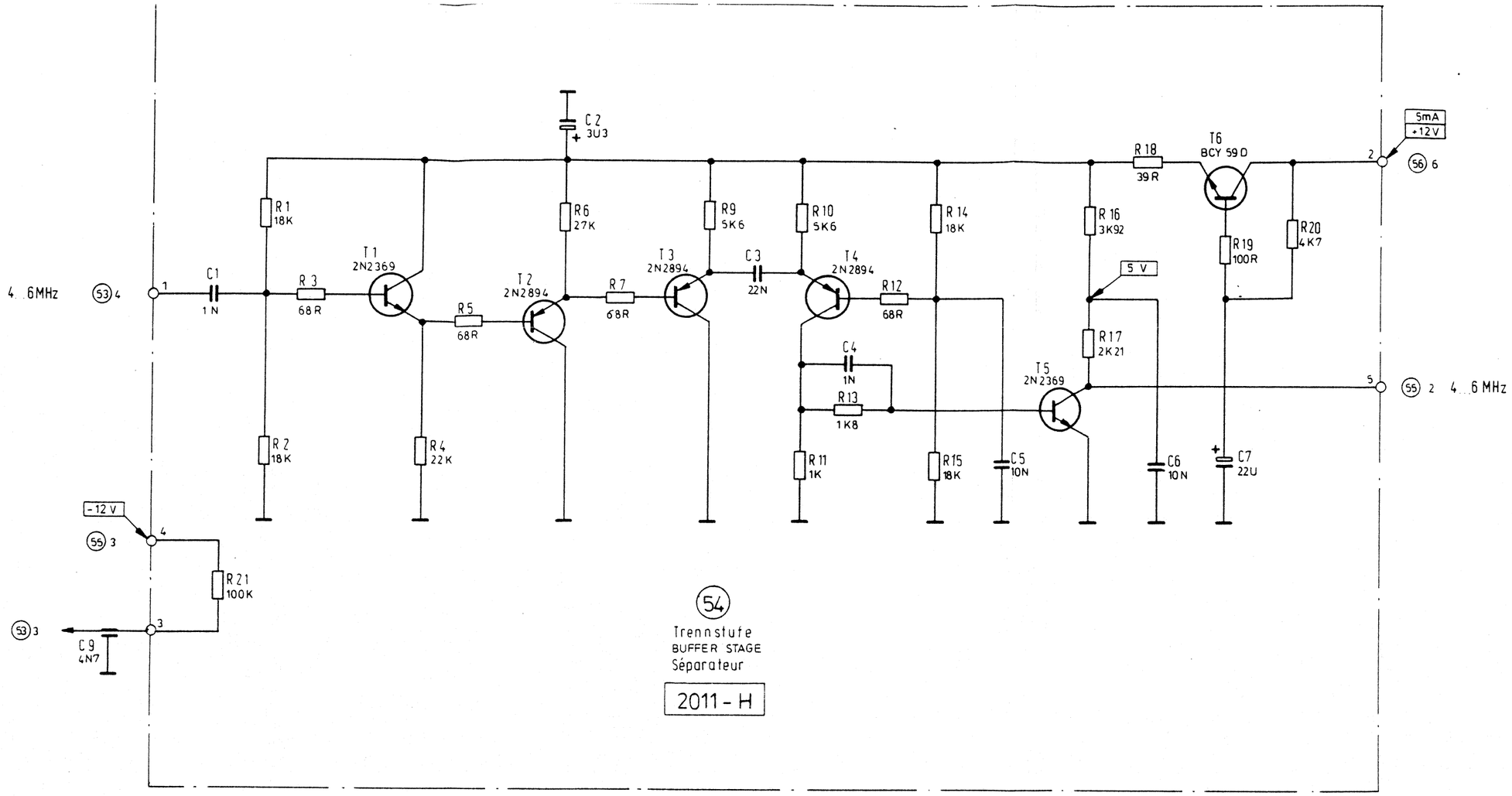

54
Trennstufe
BUFFER STAGE
Séparateur

2011 - H

Gleichspannungen gegen Masse, Instrument = 100k Ω / V
ALL VOLTAGE RATINGS MEASURED WITH RESPECT TO 0V WITH 100 KΩ / V METER
Toutes les tensions données sont mesurées par rapport à 0 V avec un instrument de 100kΩ/V

Stromlaufplan für Gerät: 00-15/BN 2011 Trennstufe BUFFER STAGE Séparateur	54	Serie A...	Schaltteilliste:
		2011-7554.018/3	1 Blatt Blatt-Nr. 1

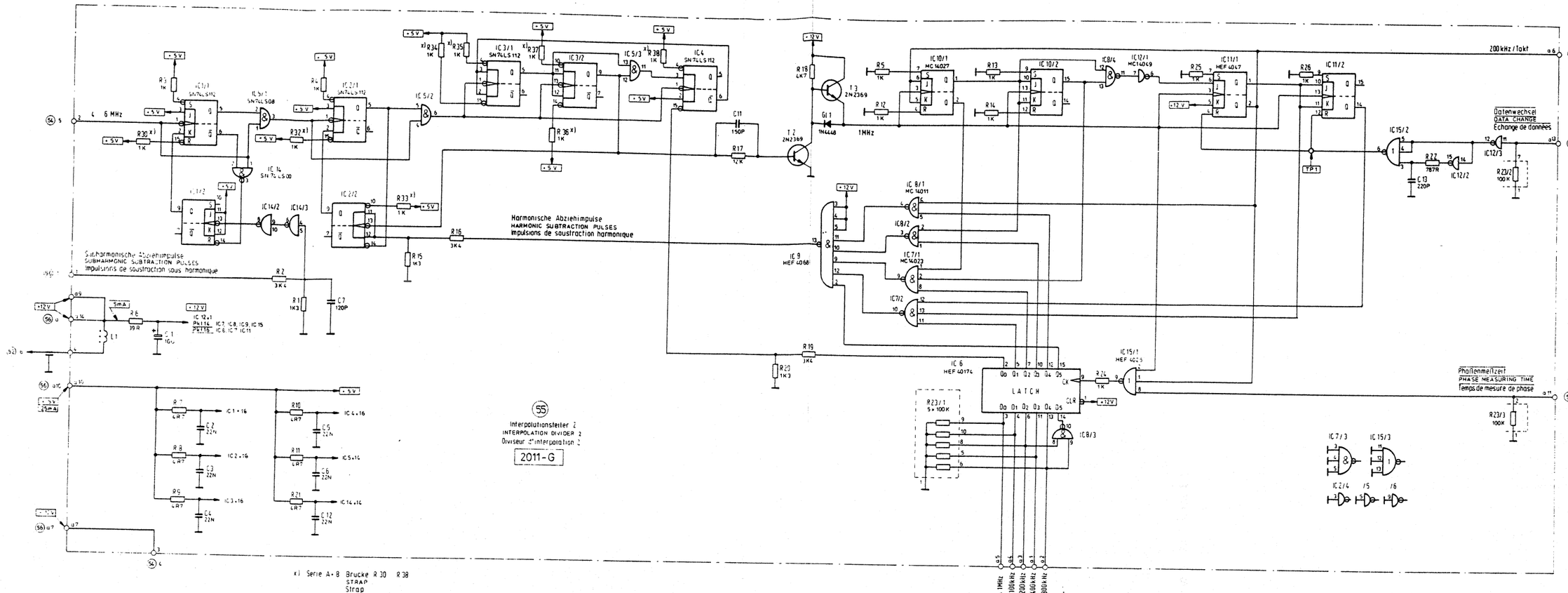

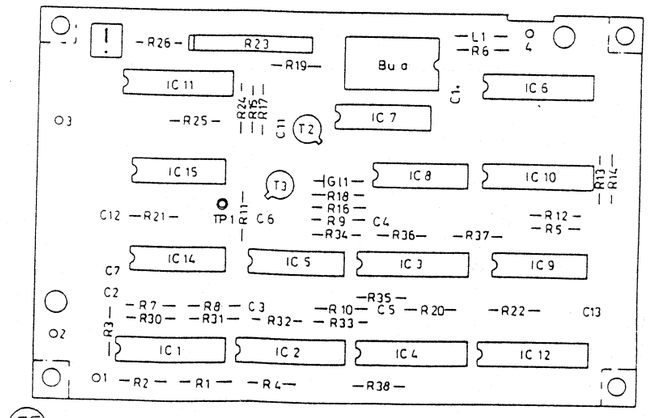

55

Interpolationsteiler 2 INTERPOLATION DIVIDER 2 Diviseur d'interpolation 2	2011-G
2011-7006.00314	

Stromlaufplan für Gerät: 00-15/BN 2011. Interpolationsteiler 2 INTERPOLATION DIVIDER 2 Diviseur d'interpolation 2	Serie A 55	1 Blatt 2011-7555.017/33

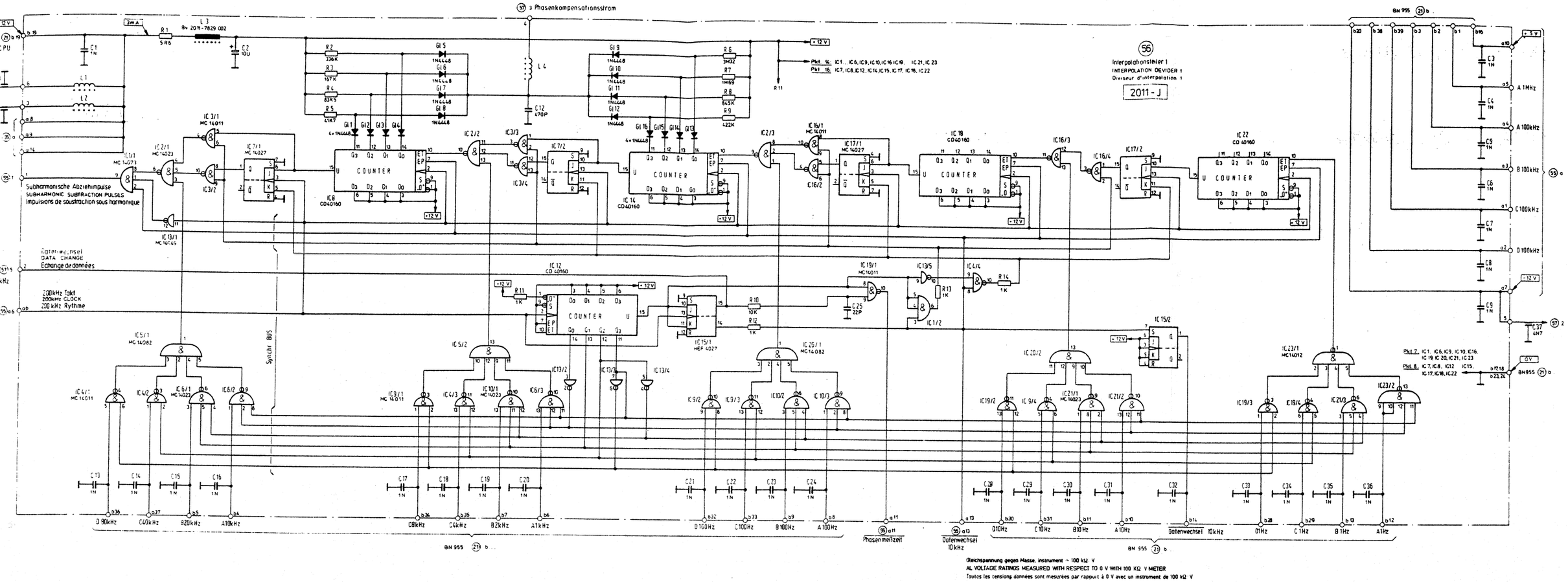

Gleichspannung gegen Masse, instrument ~ 100 kΩ V
AL VOLTAGE RATINGS MEASURED WITH RESPECT TO 0 V WITH 100 KΩ V METER
Toutes les tensions données sont mesurées par rapport à 0 V avec un instrument de 100 kΩ V

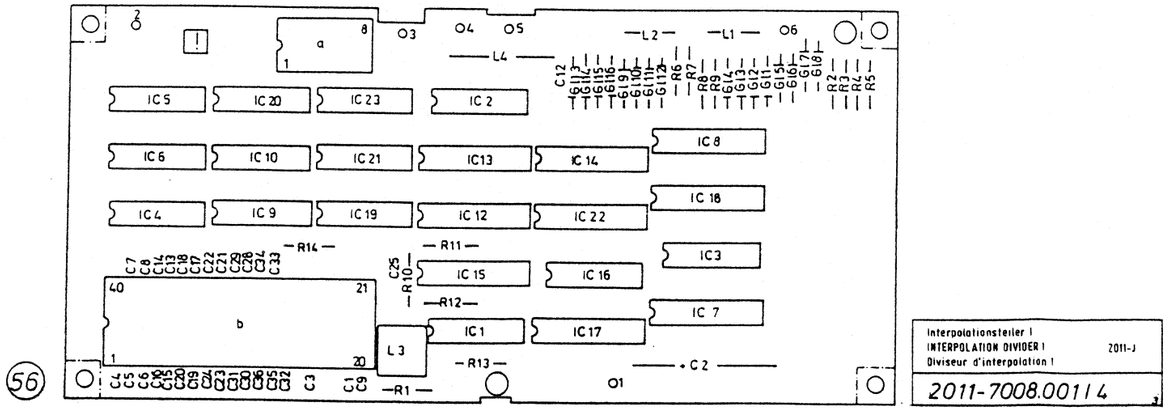

Interpolationsteiler 1
INTERPOLATION DIVIDER 1 2011-J
Diviseur d'interpolation 1
2011-7008.001/4

Interpolationsteiler 1
INTERPOLATION DIVIDER 1
Diviseur d'interpolation 1
56
Serie A 00-15/ BN 2011
2011 - 7556.016 / 33

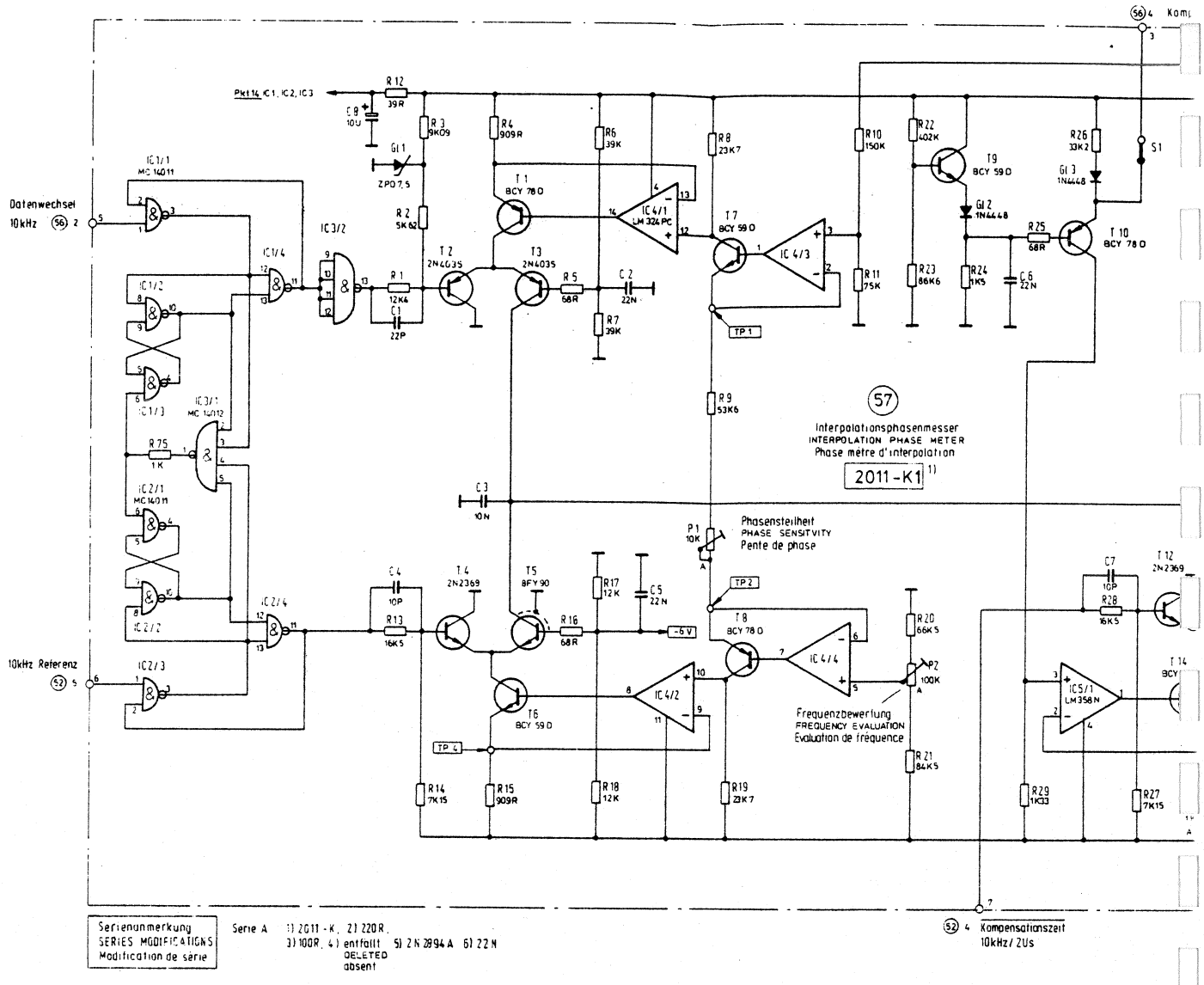
Datenwechsel
10kHz (56) 2
10kHz Referenz
(52) 5
Pkt.14, IC1, IC2, IC3
IC1/1 MC 14011
IC1/2
IC1/3
IC1/4
IC2/1 MC 14011
IC2/2
IC2/3
IC2/4
IC3/1 MC 14012
IC3/2
R12 39R
C8 10U
R3 8K09
R4 909R
R6 39K
R8 23K7
R10 150K
R22 402K
R26 33K2
S1
Gl1 ZPD7,5
R2 5K62
T1 BCY 78 D
T2 2N4035
T3 2N4035
IC4/1 LM 324 PC
T7 BCY 59 D
IC 4/3
T9 BCY 59 D
Gl3 1N4448
Gl2 1N4448
R25 68R
T10 BCY 78 D
R1 12K4
C1 22P
R5 68R
C2 22N
R7 39K
R11 75K
R23 86K6
R24 1K5
C6 22N
TP1
R9 53K6
R75 1K
C3 10N
57
Interpolationsphasenmesser
INTERPOLATION PHASE METER
Phase mètre d'interpolation
2011-K1 1)
P1 10K
Phasensteilheit
PHASE SENSITIVITY
Pente de phase
C4 10P
T4 2N2369
T5 BFY 90
R17 12K
C5 22N
TP2
T8 BCY 78 D
R13 16K5
R16 68R
-6V
IC4/4
R20 66K5
P2 100K
T6 BCY 59 D
IC4/2
Frequenzbewertung
FREQUENCY EVALUATION
Evaluation de frequence
TP4
R21 84K5
R14 7K15
R15 909R
R18 12K
R19 23K7
C7 10P
R28 16K5
T12 2N2369
IC5/1 LM 358 N
R29 1K33
R27 7K15
Serienanmerkung
SERIES MODIFICATIONS
Modification de série
Serie A 1) 2011-K, 2) 220R,
3) 100R, 4) entfällt 5) 2N 2894 A 6) 22N
DELETED
absent
(52) 4 Kompensationszeit
10kHz/20us

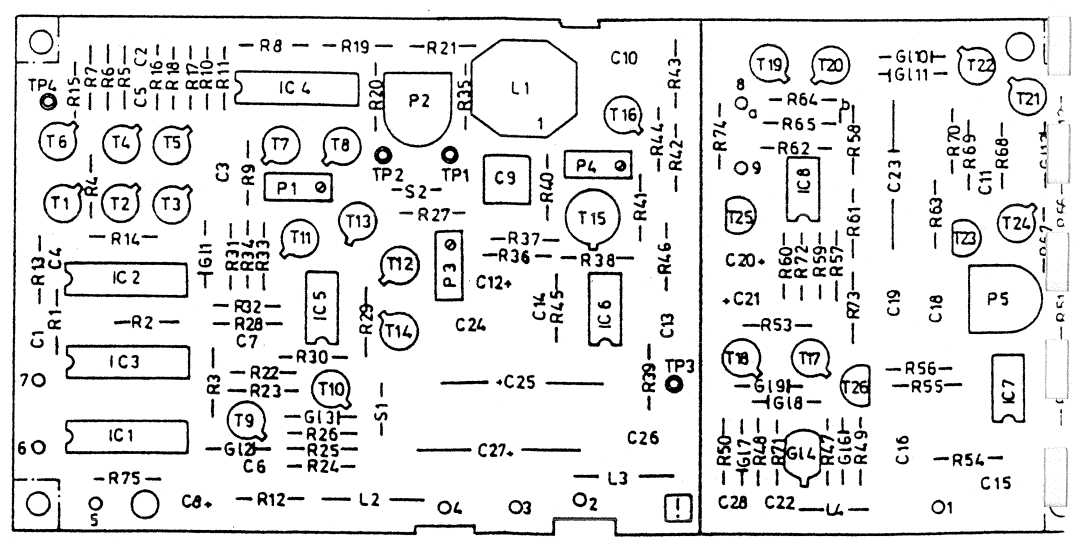
IC 4
P2
L1
C10
IC 2
IC 3
IC 1
IC 5
IC 6
IC 8
P1
P3
P4
P5
C9
C12
C24
C25
C26
C27
L2
L3
L4
TP1
TP2
TP3
TP4
S1
S2
57

(56) 4 Kompensationsstrom

Plat 14: IC1, IC2, IC3

(57)
Interpolationsphasenmesser
INTERPOLATION PHASE METER
Phase mètre d'interpolation
2011-K1 1)

Phasenteilheit
PHASE SENSITIVITY
Pente de phase

Frequenzbewertung
FREQUENCY EVALUATION
Evaluation de fréquence

Subharmonische Kompensation
SUBHARMONIC COMPENSATION
Compensation sous harmonique

Offset

Offset

Offset

Uvco

Plat. 7: IC1, IC2, IC3

(32) 4 Kompensationszeit
10kHz/20s

Serie A 1) 2011-K, 2) 220R, 3) 100R, 4) entfällt DELETED absent 5) 2N2894A 6) 22N

Bei Austausch der Platine K mit K1 muß auch die Platine D mit D1 ausgetauscht werden!
WHEN THE K BOARD IS REPLACED BY THE K1 BOARD THE D BOARD MUST BE REPLACED BY THE D1 BOARD!
Lors de l'échange de la platine K en K1 la platine D doit être également échangée en D1!

Gleichspannung gegen Masse, Instrument = 100 kΩ/V
ALL VOLTAGE RATINGS MEASURED WITH RESPECT TO 0 V WITH 100 KΩ/V METER
Toutes les tensions données sont mesurées par rapport à 0 V avec un instrument de 100 kΩ. V

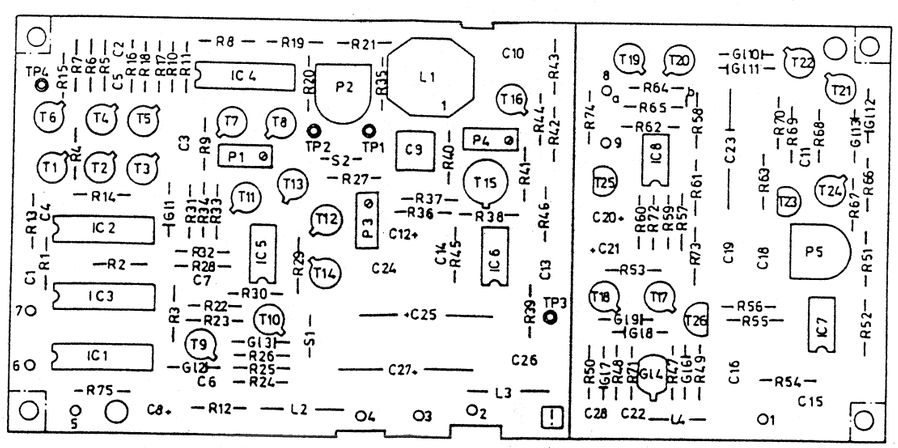

Interpolationsphasenmesser
INTERPOLATION PHASE METER 2011-K1
Phasemètre d'interpolation
2011-7009 00014

Interpolationsphasenmesser
INTERPOLATION PHASE METER
Phasemètre d'interpolation
(57)
Serie A | DD - 15 / BM 2011
2011 - 7557.015 / 33
1 Blatt

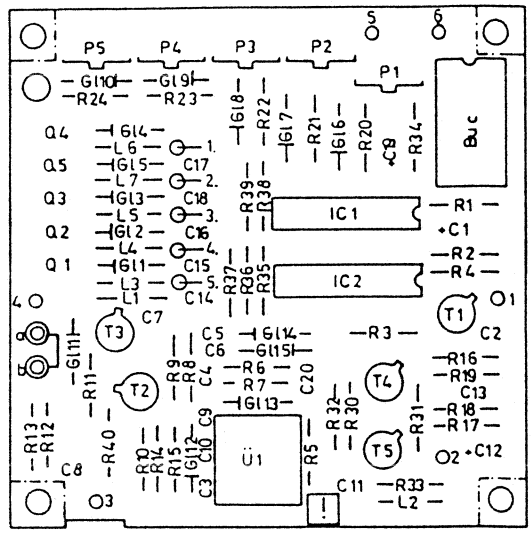

(58)

Rastoszillator
LOCKING OSCILLATOR 2011-N
Oscillateur de verrouillage

2011-7012.00014 1a

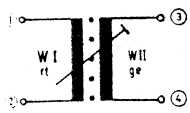

58 Ü 1

Bv. 2011-7728.006/4 1

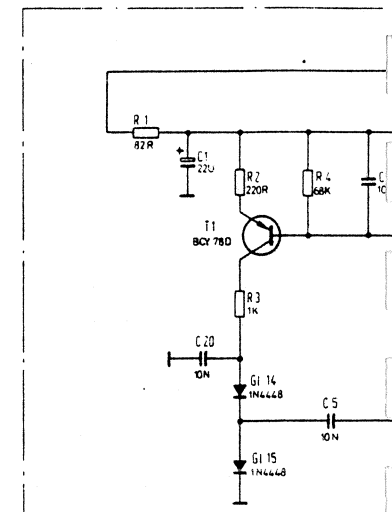

(58)

Rastoszillator
LOCKING OSCILLATOR
Oscillateur de verrouillage

2011-N

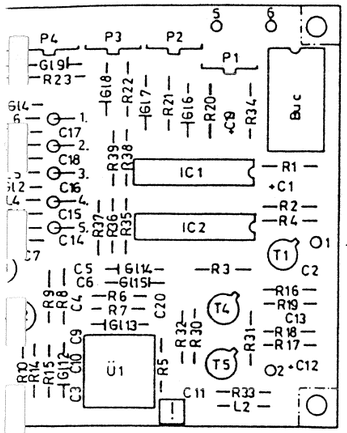

Rastoszillator LOCKING OSCILLATOR Oscillateur de verrouillage	2011-N
2011-7012.00014	1a

58 Ü 1
Bv. 2011-7728.006/4 1

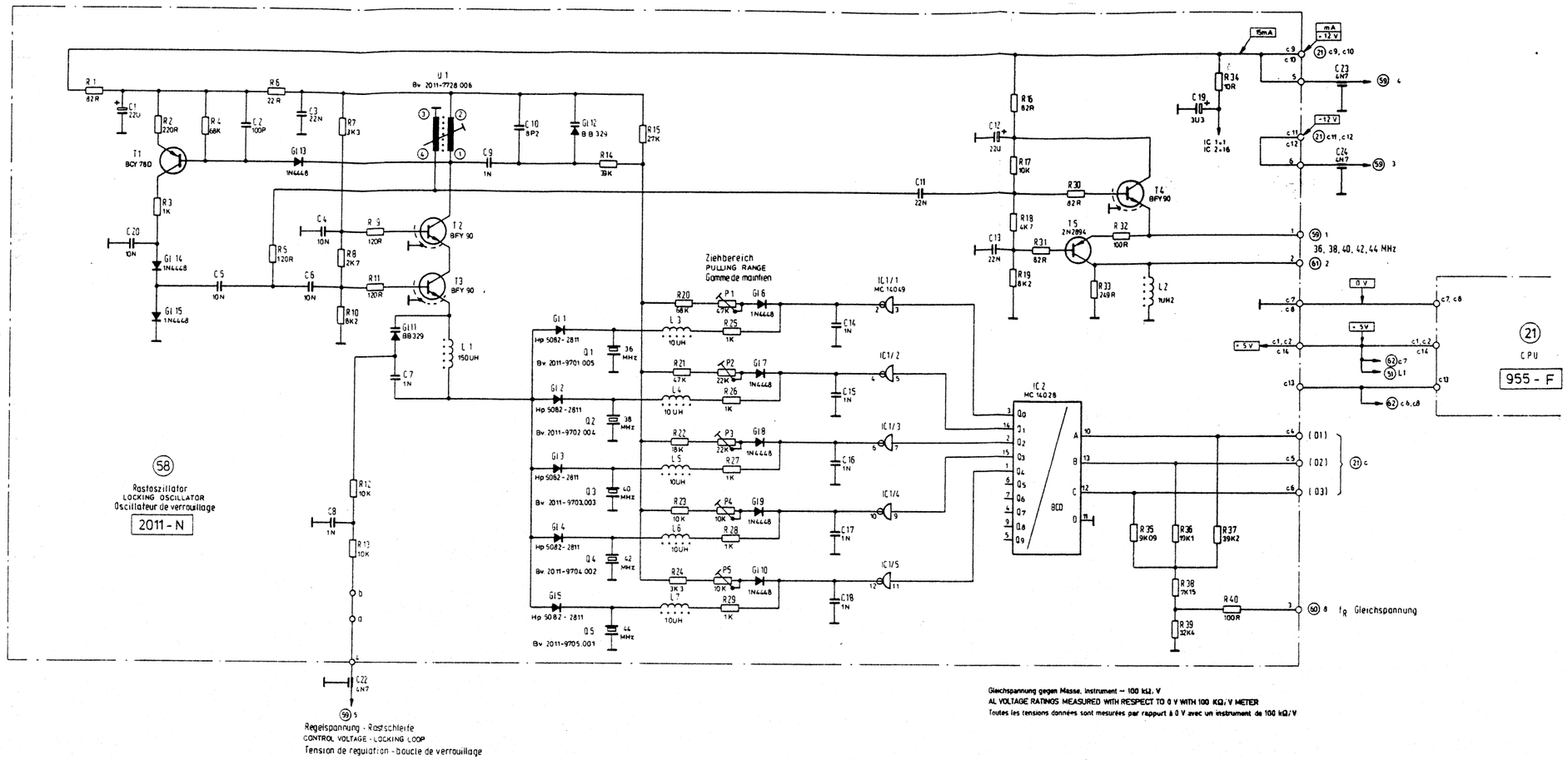

(58)
Rastoszillator
LOCKING OSCILLATOR
Oscillateur de verrouillage
2011 - N

(59) 5
Regelspannung - Rastschleife
CONTROL VOLTAGE - LOCKING LOOP
Tension de regulation - Boucle de verrouillage

Gleichspannung gegen Masse, Instrument ≈ 100 kΩ. V
AL VOLTAGE RATINGS MEASURED WITH RESPECT TO 0 V WITH 100 KΩ/V METER
Toutes les tensions données sont mesurées par rapport à 0 V avec un instrument de 100 kΩ/V

Rastoszillator LOCKING OSCILLATOR Oscillateur de verrouillage (58)	Serie A	00-15 / BN 2011
	2011-7558.014 / 34	1

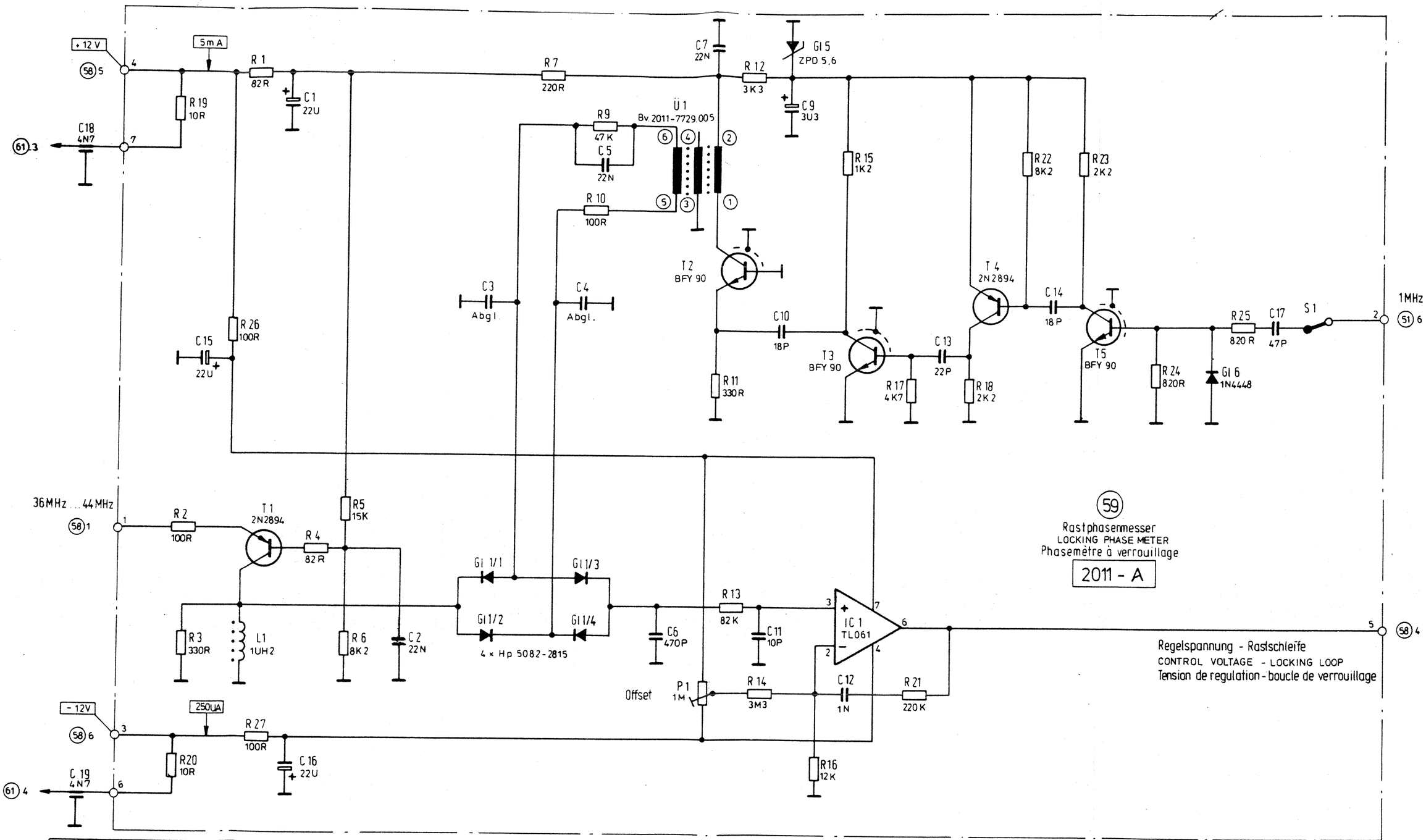

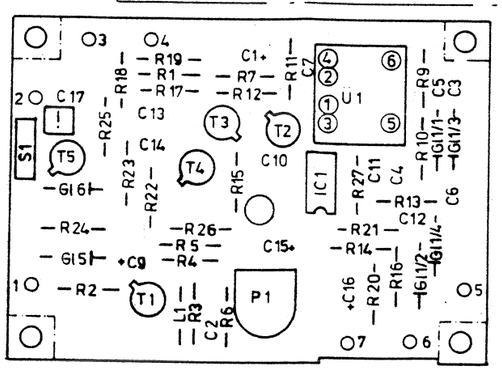

59

Rastphasenmesser
LOCKING PHASE METER
Phasemètre à verrouillage

2011 - A

Gleichspannungen gegen Masse, Instrument = 100 kΩ/V
ALL VOLTAGE RATINGS MEASURED WITH RESPECT TO 0V WITH 100 KΩ /V METER
Toutes les tensions données sont mesurées par rapport à 0 V avec un instrument de 100 kΩ/V

Rastphasenmesser LOCKING PHASE METER Phasemètre de verrouillage	2011- A
2011-7000.00914	3

Stromlaufplan für Gerät : 00-15/BN 2011 Rastphasenmesser LOCKING PHASE METER Phasemètre à verro illage (59)	Serie A ...	Schaltteilliste :
	2011 - 7559.013/3 1a	...1... Blatt Blatt-Nr.:...

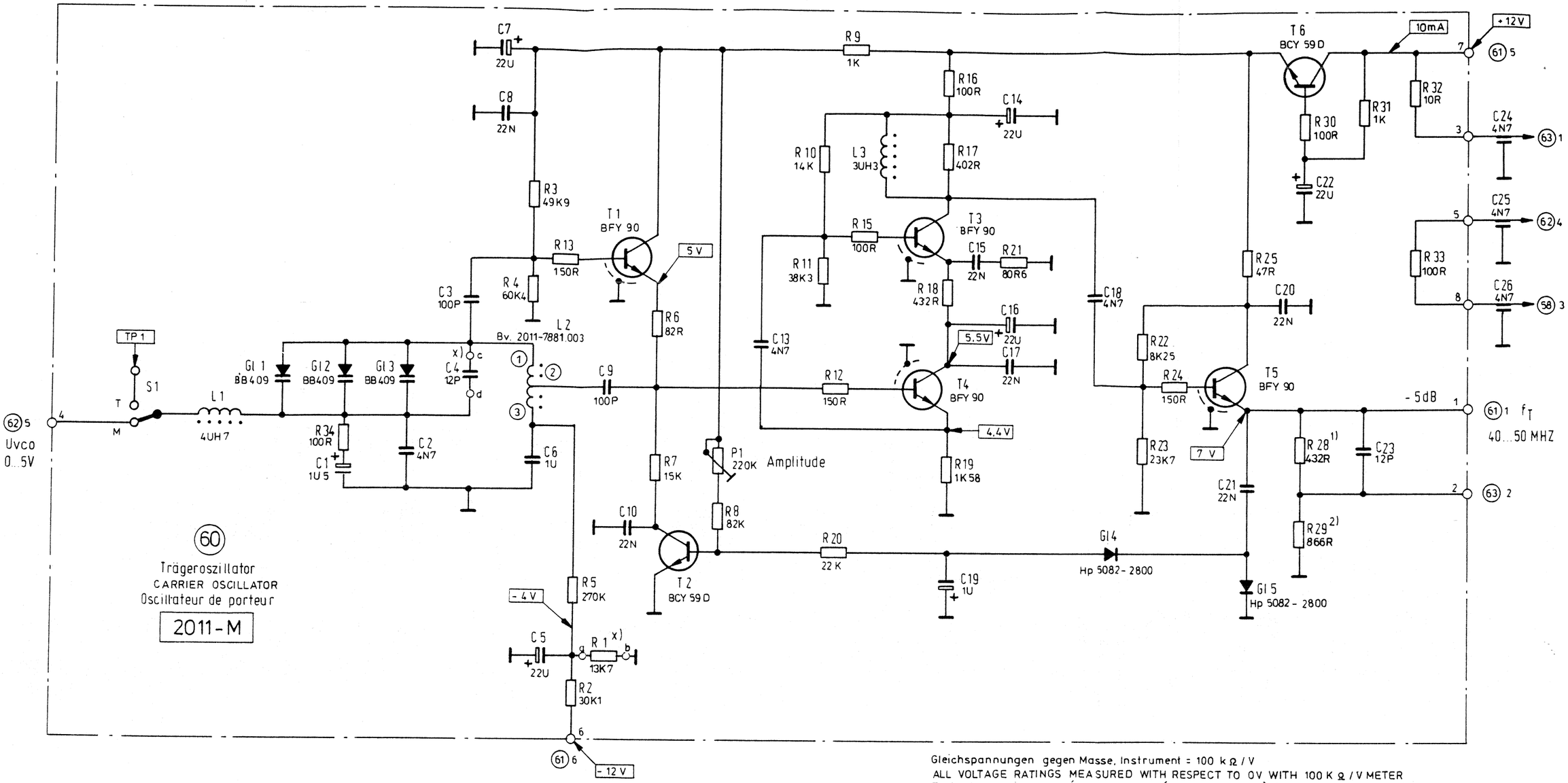

Gleichspannungen gegen Masse, Instrument = 100 kΩ / V
ALL VOLTAGE RATINGS MEASURED WITH RESPECT TO 0V WITH 100 KΩ / V METER
Toutes les tensions données sont messurées par rapport à 0 V avec un instrument de 100kΩ/V

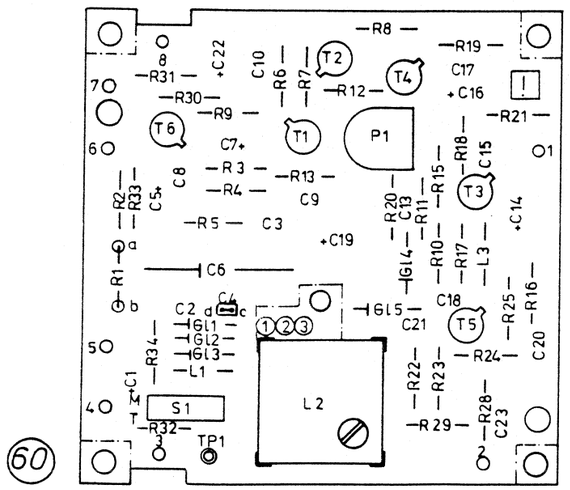

x) Abgleichwert

Serienänderungen: Serie A: 1) 649R, 2) 1K3

Trägeroszillator CARRIER OSCILLATOR Oscillateur de porteur	2011-M
2011-7011.001/4	5

Stromlaufplan für Gerät: 00-15/BN 2011 Trägeroszillator CARRIER OSCILLATOR Oscillateur de porteur (60)	Serie A ...	Schaltteilliste:
	2011-7560.015/3	3
		...1... Blatt Blatt-Nr. ...

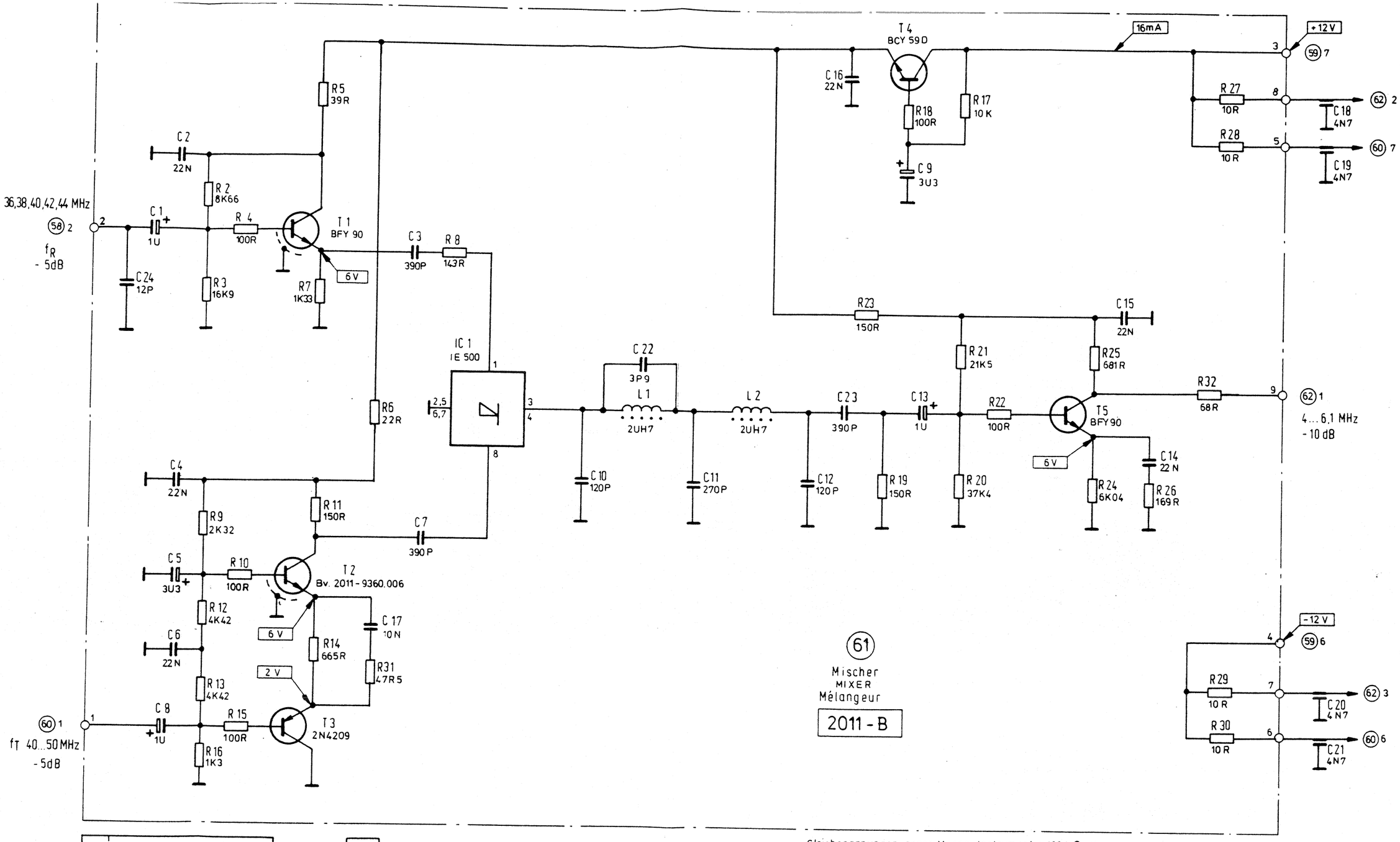

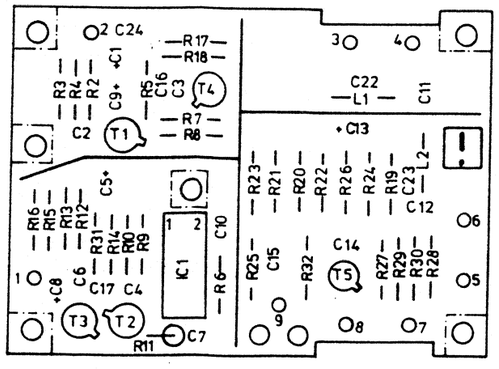

Gleichspannungen gegen Masse, Instrument = 100 kΩ / V
ALL VOLTAGE RATINGS MEASURED WITH RESPECT TO 0 V WITH 100 kΩ / V METER
Toutes les tensions données sont mesurées par rapport à 0V avec un instrument de 100 kΩ / V

Benennung:	
Mischer MIXER Mélangeur	2011-B
2011-7001.00814	2

Stromlaufplan	für Gerät: 00-15 / BN 2011.....	Serie A...	Schaltteilliste:
Mischer MIXER Mélangeur	(61)	2011 - 7561.014 / 3	..1.. Blatt Blatt-Nr. 2

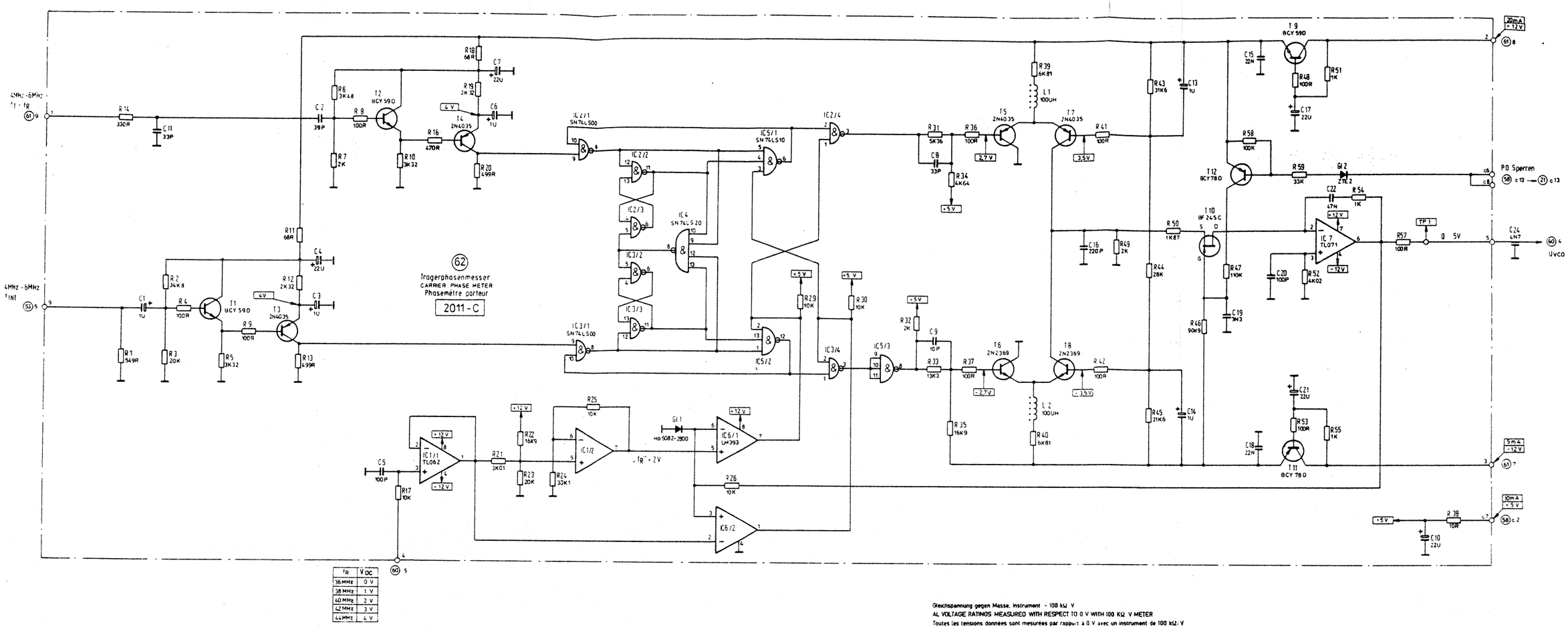

fR	V DC
36 MHz	0 V
38 MHz	1 V
40 MHz	2 V
42 MHz	3 V
44 MHz	4 V

Gleichspannung gegen Masse, Instrument - 100 kΩ/ V
AL VOLTAGE RATINGS MEASURED WITH RESPECT TO 0 V WITH 100 KΩ V METER
Toutes les tensions données sont mesurées par rapport à 0 V avec un instrument de 100 kΩ/ V

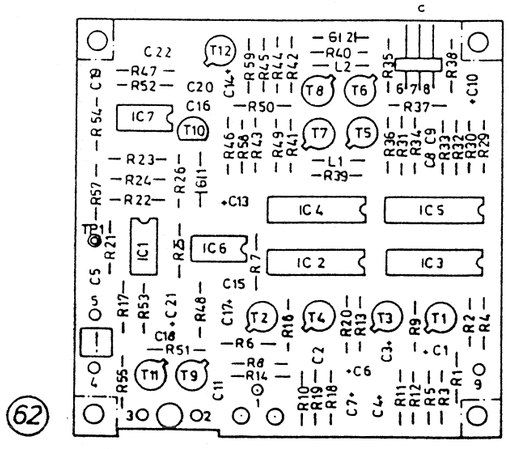

Benennung:	
Trägerphasenmesser CARRIER PHASE METER Phasemètre porteur	2011 - C
2011-7002.00714	

Trägerphasenmesser CARRIER PHASE METER Phasemètre porteur	62	Serie A 00-15/ BN 2011 2011 - 7562.013 / 33

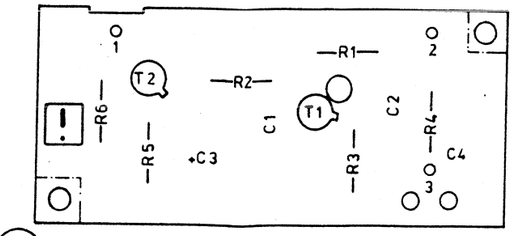

Ausgangsverstärker OUTPUT AMPLIFIER 2011-L Amplificateur de sortie
2011-7010.00214 2

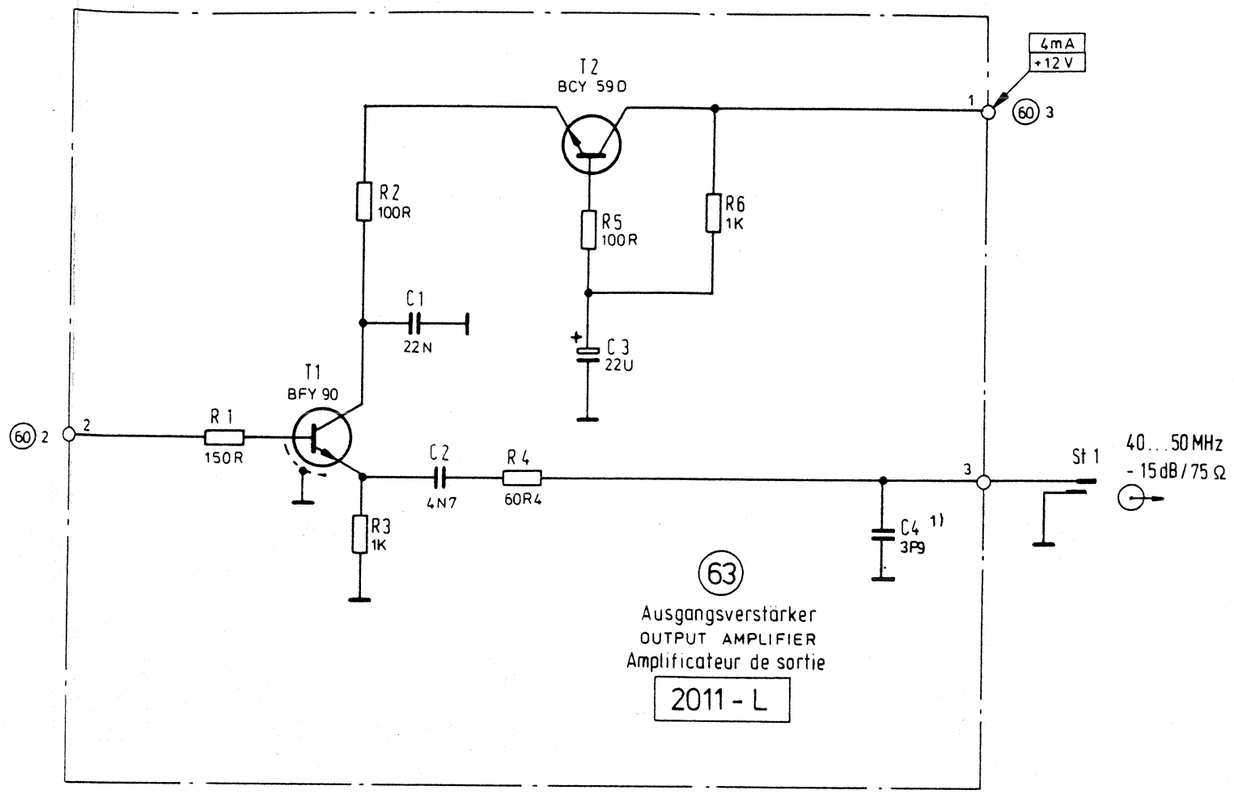

Gleichspannungen gegen Masse, Instrument = 100 kΩ / V
ALL VOLTAGE RATINGS MEASURED WITH RESPECT TO 0V WITH 100kΩ / V METER
Toutes les tensions données sont mesurées par rapport à 0 V avec un instrument de 100 kΩ / V

WG Stromlaufplan für Gerät: 00-15/BN 2011 Ausgangsverstärker OUTPUT AMPLIFIER Amplificateur de sortie (63)	Serie A...		...1.. Blatt
	2011-7563.012 / 4		Blatt-Nr.:..

2.1	Batteriezusatz BAZ-15	BN 955/00.01
2.1	Battery Pack BAZ-15	BN 955/00.01
2.1	Auxiliaire batterie BAZ-15	BN 955/00.01

Option 955/00.01 (Batteriezusatz BAZ-15) siehe unter Stromlaufplan (1) (Netzteil)

Option 955/00.01 (BAZ-15 Battery Pack) see under circuit diagram (1) (power supply)

Option 955/00.01 (alimentation sur batterie BAZ-15) voir à schéma de principe (1) (alimentation)

2.2	Mitlaufsender PSE-15	BN 955/00.02
2.2	Tracking Generator PSE-15	BN 955/00.02
2.2	Générateur suiveur PSE-15	BN 955/00.02

Hinweis: Seiten 55 - 57 entfallen

N.B.: pages 55 - 57 omitted

Note: les pages 55 à 57 sont supprimées

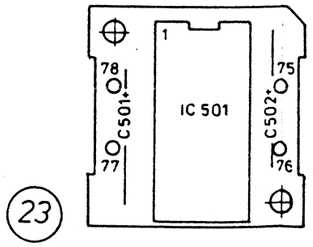

23

DC-Wandler
DC - CONVERTER 955 - AH
Convertisseur DC

955-7032.00114 1b

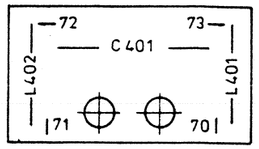

23

Siebung
FILTERING 955-AP
Filtrage

955-7039.00414 1b

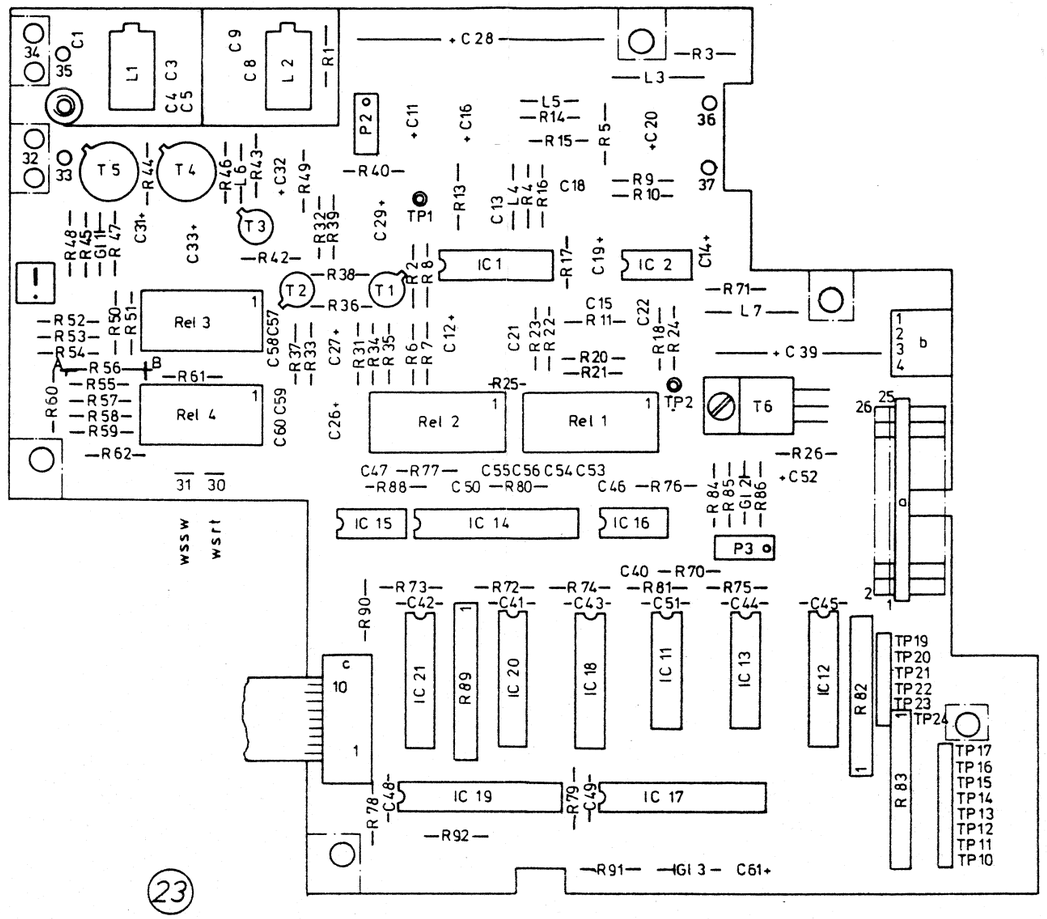

PSE - Verstärker
PSE AMPLIFIER 955 - AT
Amplificateur PSE

955 - 7043.003 / 3 2

(23) Siebung FILTERING Filtrage 955 - AP

(23) DC-Wandler DC-CONVERTER Convertisseur CC 955 - AH

IC 501 V5R15

10 MHz - Tiefpaß LOW PASS FILTER 10 MHz Filtre passe bas 10 MHz

TP 1 7,1 V -25,0...-35,5 dB -30,5 dB ≙ 0 dB Sendepegel

TP 2 - 6dB ≙ 0dB Sendepegel SEND LEVEL Niveau d'emission

Frequenzgang FREQUENCY RESPONSE Réponse en fréquence

V1 = 25dB

0/10/20 dB - Teiler ATTENUATOR 0/10/20 dB Diviseur 0/10/20 dB

Absolutpegel ABSOLUTE LEVEL Niveau absolu

V2 = 12 dB

25 dB - Teiler ATTENUATOR 25dB Diviseur 25 dB

40dB Teiler ATTENUATOR 40 dB Diviseur 40 dB

(23) PSE - Verstärker PSE - AMPLIFIER Amplificateur - PSE 955 - AT

IC 14 AD7545KN Adr. 1 FH

IC 17 HEF 40374 Adr. 1 DH

IC 19 HEF 40374 Adr. 1 EH

Bu 4 (10) SI 2 FINE LEVEL CONTROL

Serienanmerkung SERIES MODIFICATIONS Modification de série 1) Serie

Bestückungszeichnung siehe Seite FOR ASSEMBLY MARKINGS SEE PAGE Schema d'implantation voir page 58

Gleichspannungen gegen Masse ALL VOLTAGE RATINGS MEASURED WITH RESPECT TO 0 V Toutes les tensions données sont mesurées par rapport à 0 V

Buchsenbelegung siehe FOR CONNECTOR ARRANGEMENT SEE Câblage des connecteurs voir

x) Abgleichwert ALIGNMENT VALUE Valeur d'adjustage

59

PSE - 15/955/00.02 | Serie E... | Ausg. 1

Mitlaufsender TRACKING GENERATOR Générateur suiveur

23

1 Blatt Blatt 1

955 - 7523.028/3

FF

2.3	Interface <IEC 625>-Karte	BN 955/00.03
2.3	Interface <IEC 625> Card	BN 955/00.03
2.3	Carte Interface <IEC 625>	BN 955/00.03

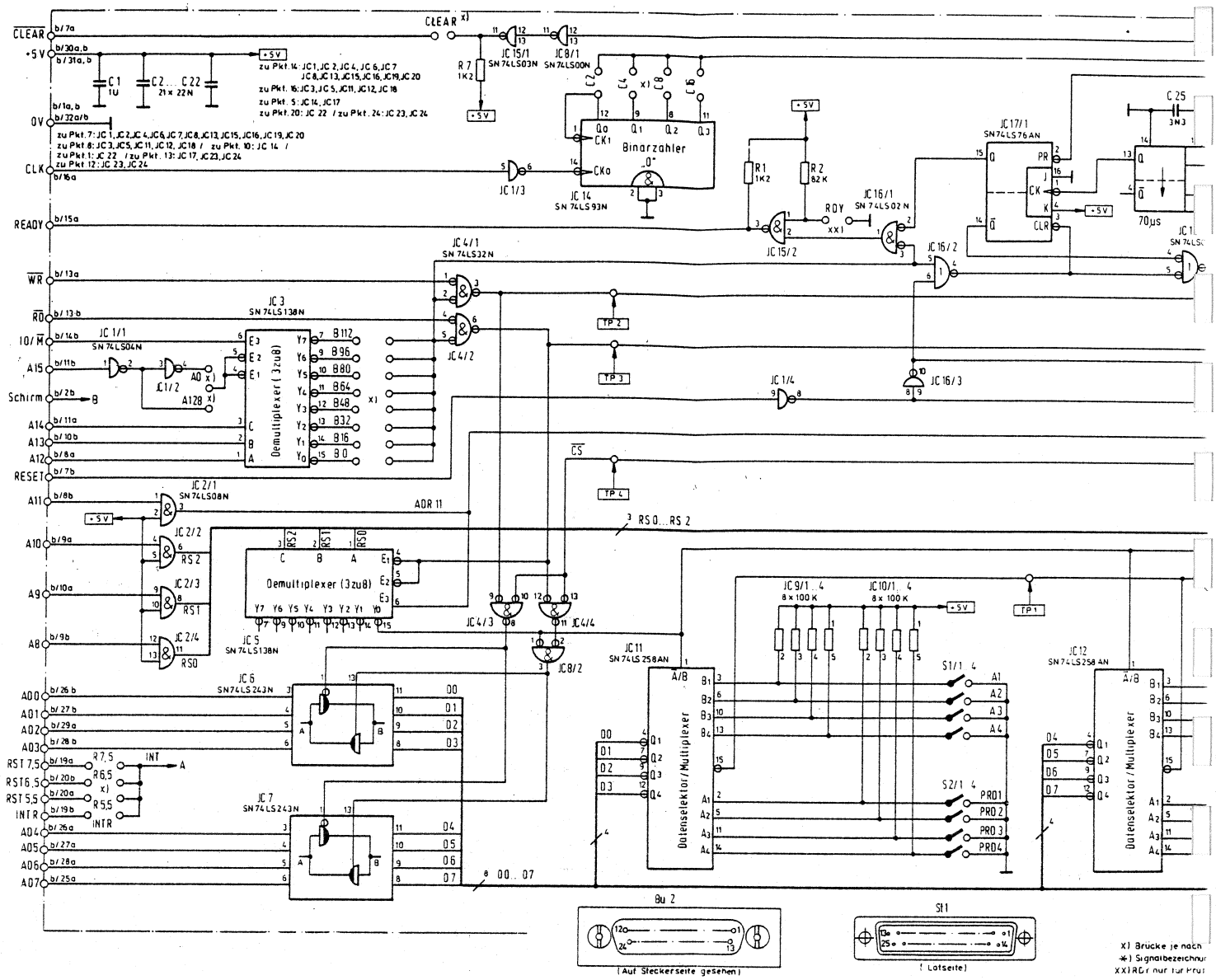

Brückenbestückung auf 853 - 7001.008 / 3, x = bestückt

A 0	
A 128	X
B 0	
B 16	
B 32	
B 48	
B 64	
B 80	
B 96	
B 112	X
C 2	
C 4	X
C 8	
C 16	

CLR	
G	X
JH	X
JL	
INTR	
RST 5,5	
RST 6,5	
RST 7,5	X

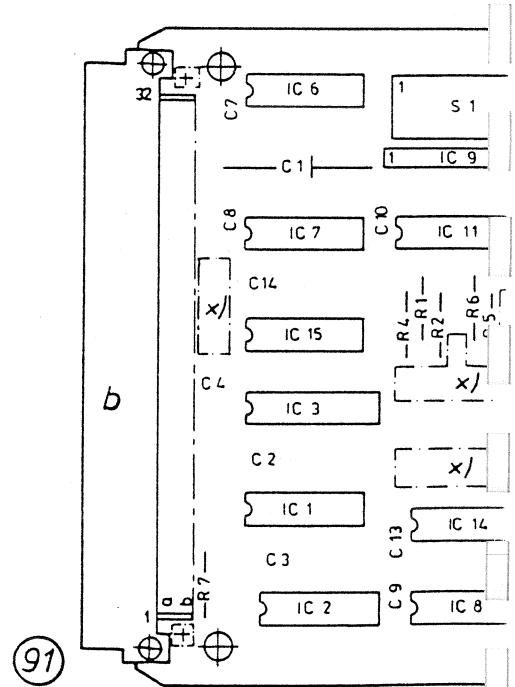

Ausführung
IEC - 625 - BUS / BN 853/08
Bv. 853-8408.008/4 2

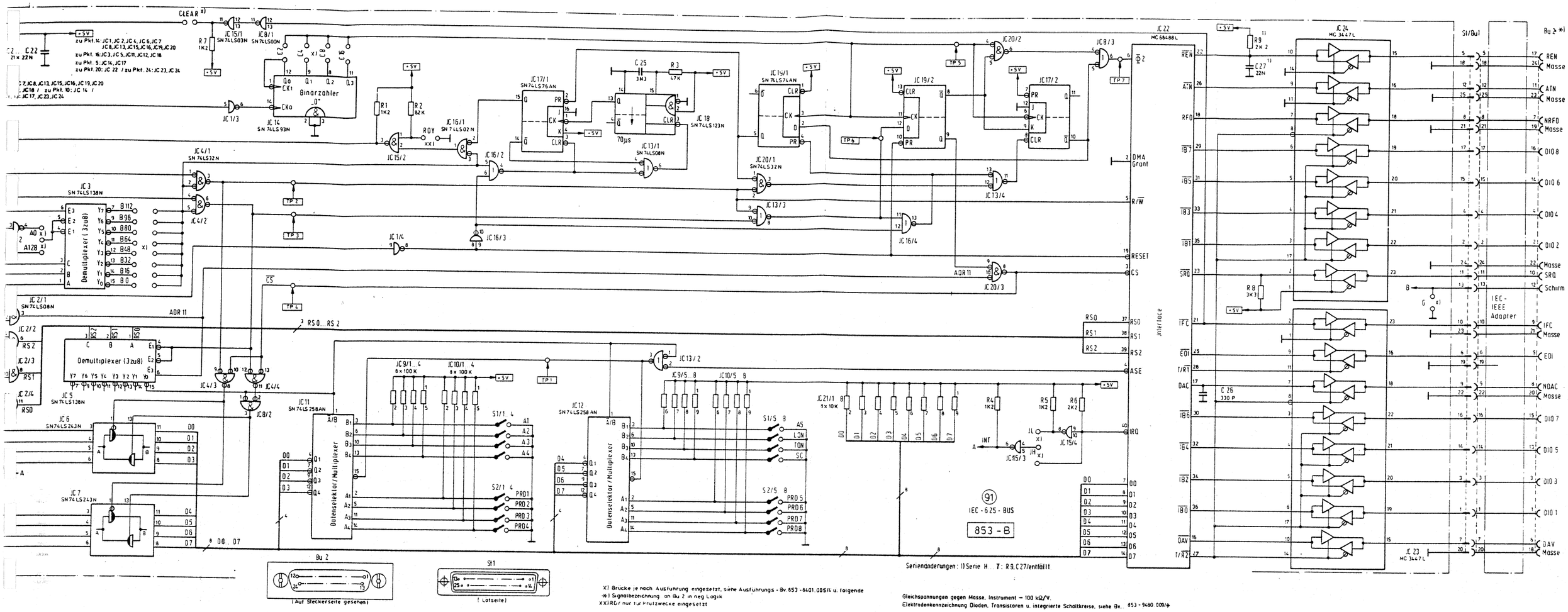

Brückenbestückung auf 853 - 7001.008 / 3, x = bestückt

A 0	
A 128	X
B 0	
B 16	
B 32	
B 48	
B 64	
B 80	
B 96	
B 112	X
C 2	
C 4	X
C 8	
C 16	

CLR	
G	X
JH	X
JL	
INTR	
RST 5,5	
RST 6,5	
RST 7,5	X

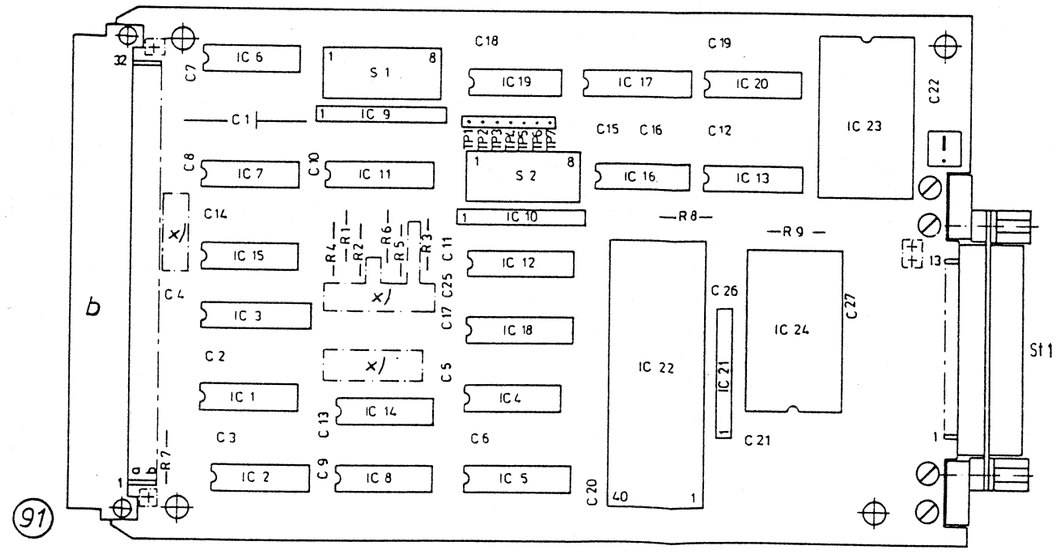

(91) <IEC-625>-Bus, BN 853/50
Auf Steckerseite gesehen

bestückt
Binärzähler
Brücke je nach Ausführung eingesetzt, siehe Ausführungs-Bv. ... u. folgende

Datenselektor
Demultiplexer

Interface

Lötseite

Masse
Multiplexer

RDY nur für Prüfzwecke eingesetzt

Schirm
Serienänderungen: Serie ... entfällt
Signalbezeichnung an Bu ... in neg. Logik

(91) <IEC 625> Bus, BN 853/50
Seen from connector side

assembled
Binary counter
Use of strap depends on Version, see Version Bv. and ff

Data selector
Demultiplexer

Interface

Soldering side

Chassis ground
Multiplexer

RDY applied only for testing

Screen
Series modifications: Series ... omitted
Signal designation at Bu ... in neg. logic

(91) Bus <IEC 625>, BN 853/50
Vue côté connecteur

équipé
Compteur binaire
Straps placé suivant les versions voir Bv. ... et ...

Sélecteur de données
Démultiplexeur

Interface

Côté soudure

Masse
Multiplexeur

RDY utilisé uniquement pour le contrôle

Ecran
Modifications de séries: série ... supprimé
Désignation signal sur Bu ... en logique négative

Ausführung
IEC - 625 - BUS / BN 853/08
Bv. 853 - 8408.008/4 2

Benennung:
IEC - 625 - Bus
bestückt 853 - B
853 - 7001.008/3 5

Stromlaufplan (91) für Gerät: BN 853/50
IEC - 625 - BUS
Serie H.
853 - 7591.026/33
Blatt 1
Blatt-Nr 1
5

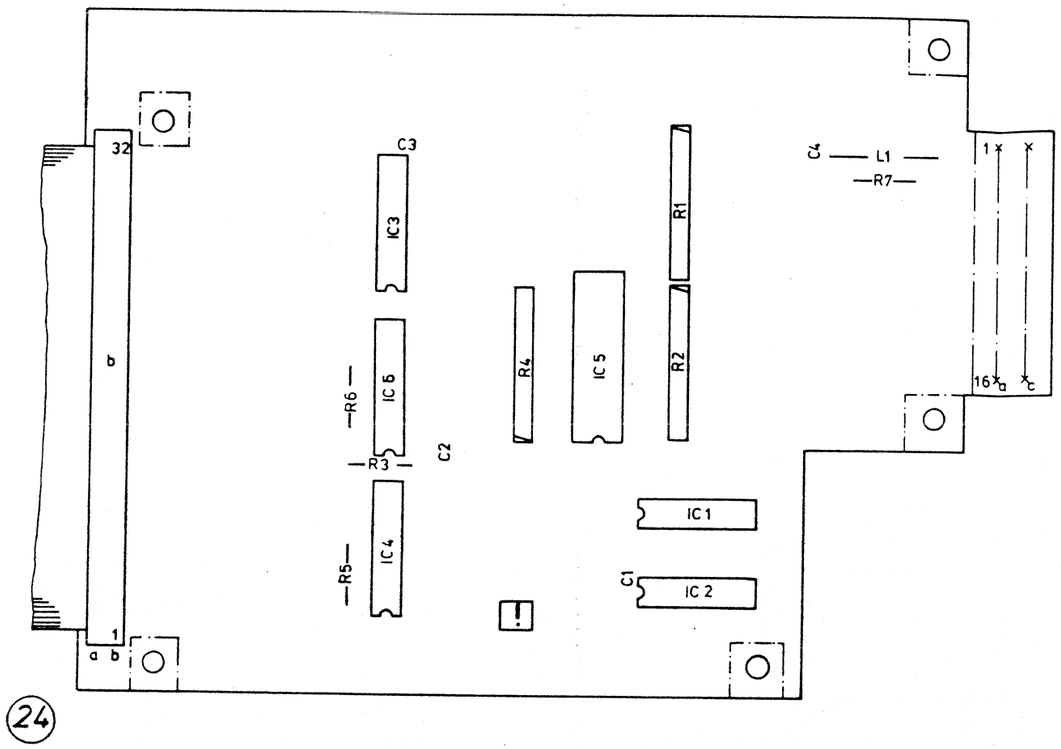

(24)

Benennung:

IEC-Bus Anpassung
IEC-BUS ADAPTATION
Adaptation IEC-BUS

955-AR

955-7041.005/3 1a

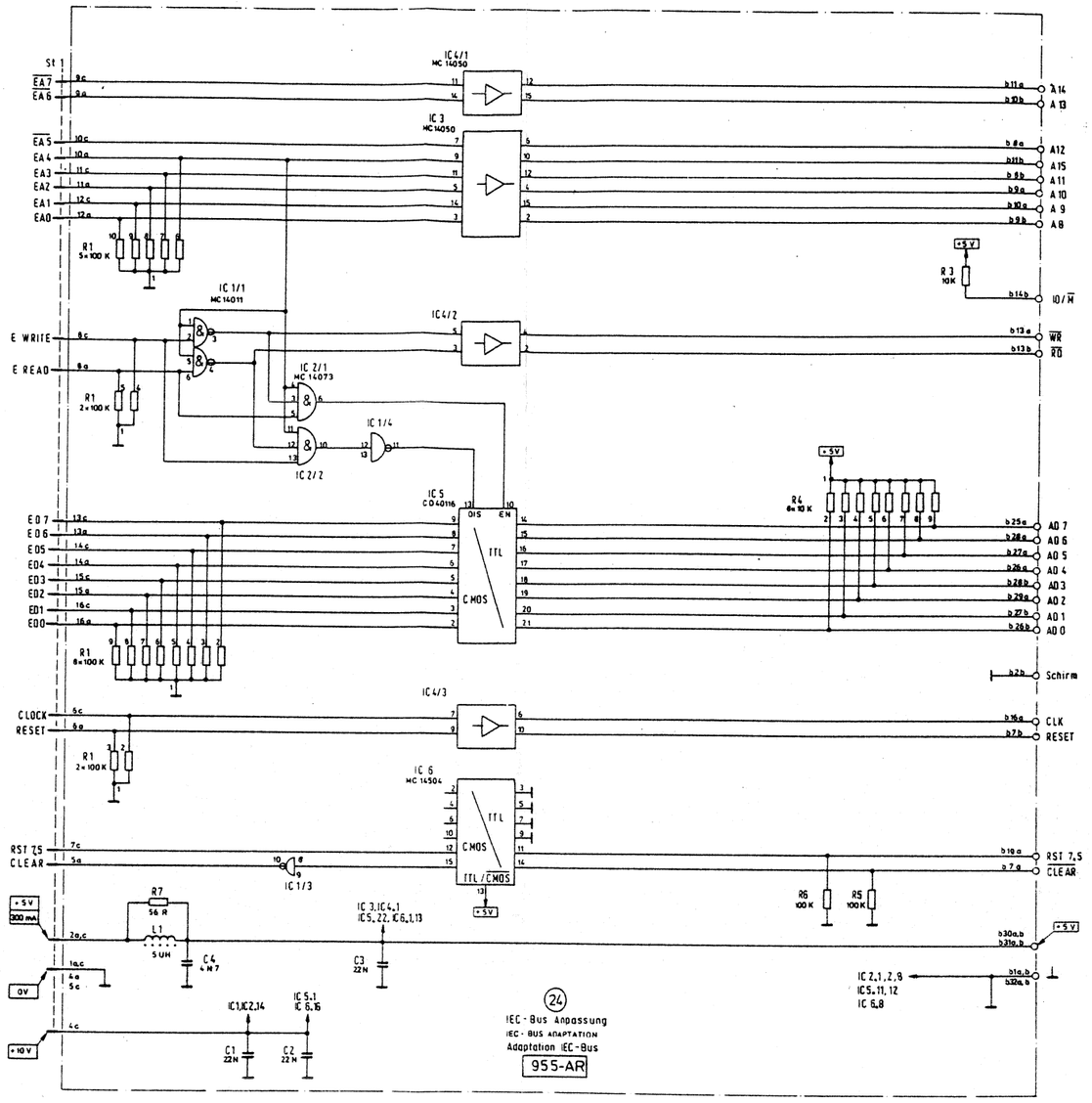

SPM-15/00.03	Serie A...	Ausg. a
IEC-Bus Anpassung IEC-BUS ADAPTER Adaptation IEC-Bus	(24)	1 Blatt Blatt 1
955-7524.014/3		FF

2.4	Zusatzfilter 100 Hz	BN 955/00.06
2.4	100 Hz auxiliary filter	BN 955/00.06
2.4	Filtre auxiliaire 100 Hz	BN 955/00.06

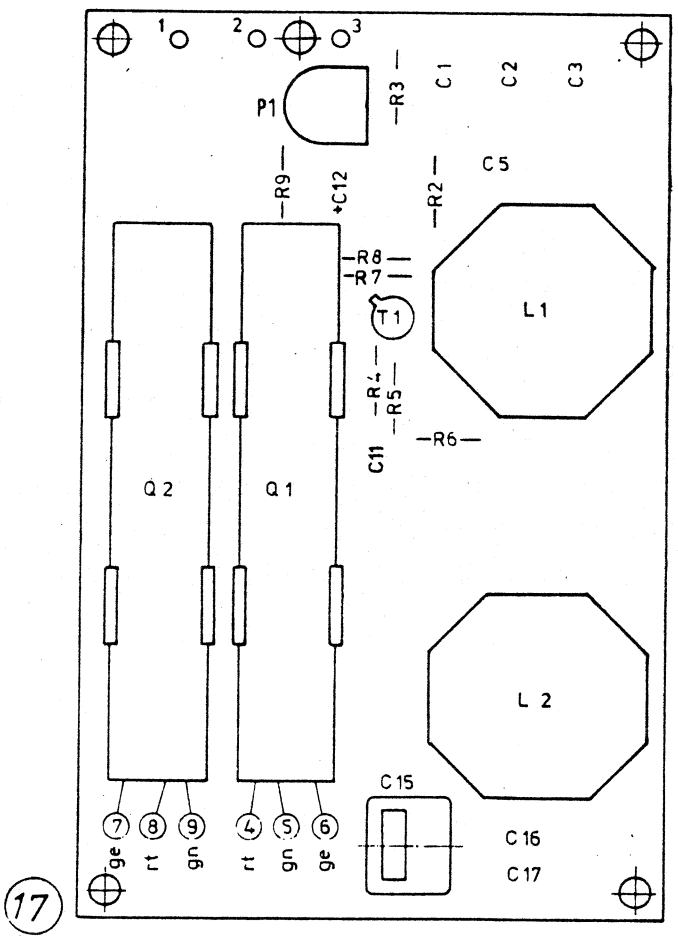

17

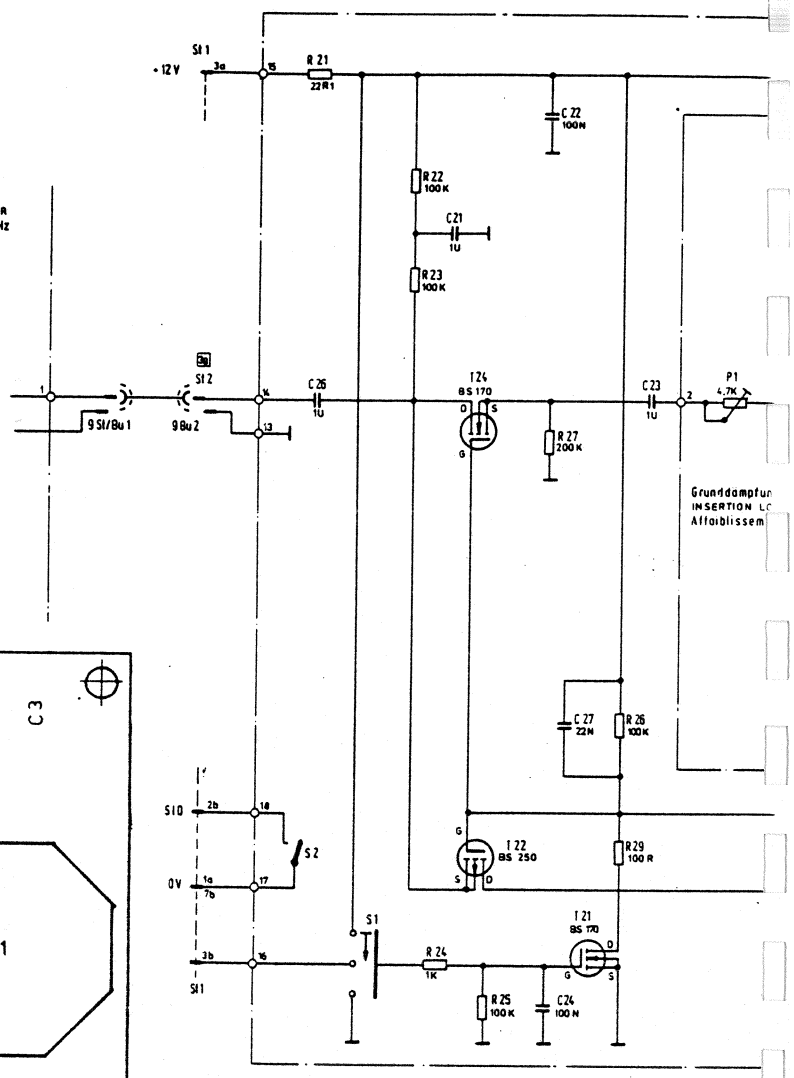

9
10kHz Bandpass
10kHz BANDPASS FILTER
Filtre passe bande 10kHz
955 - B

10 kHz Bandpass / 100 Hz 955-AX 10 kHz BANDPASS FILTER / 100 Hz 10 kHz Filtre passe bande / 100 Hz
955-7047.009/4 a

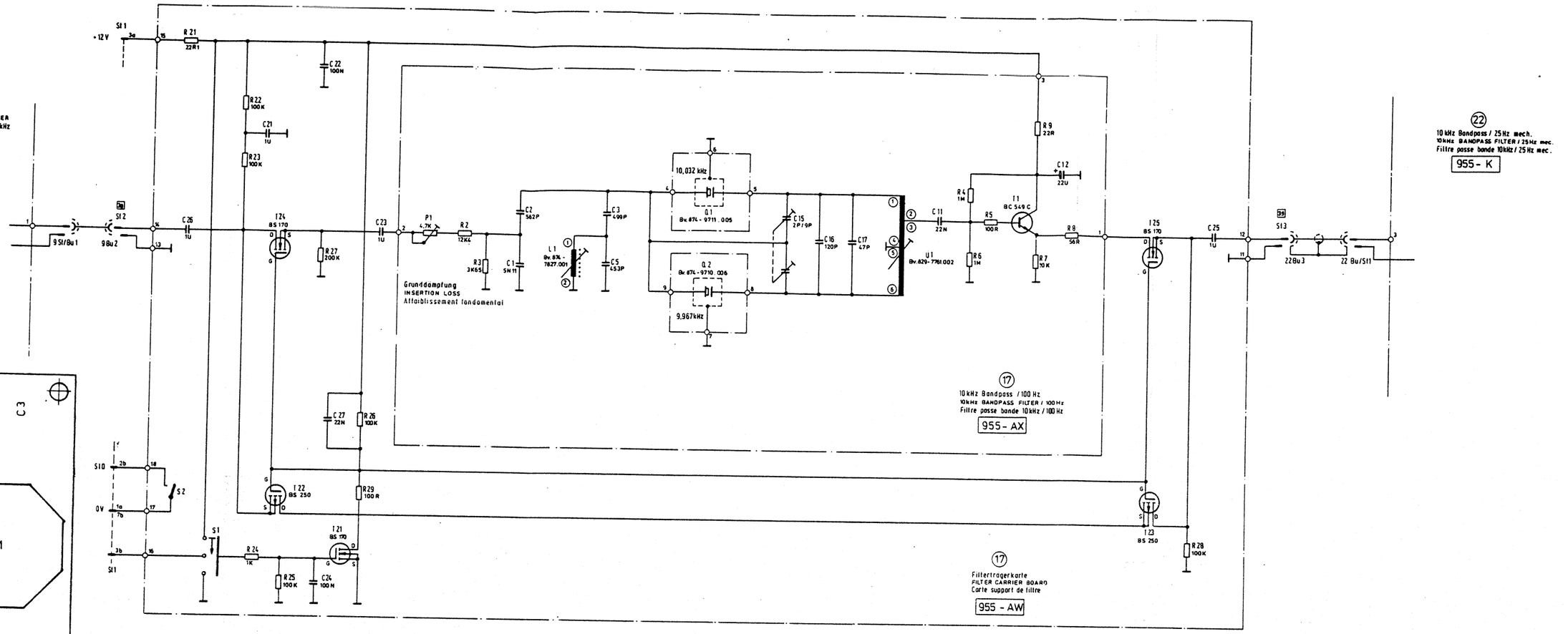

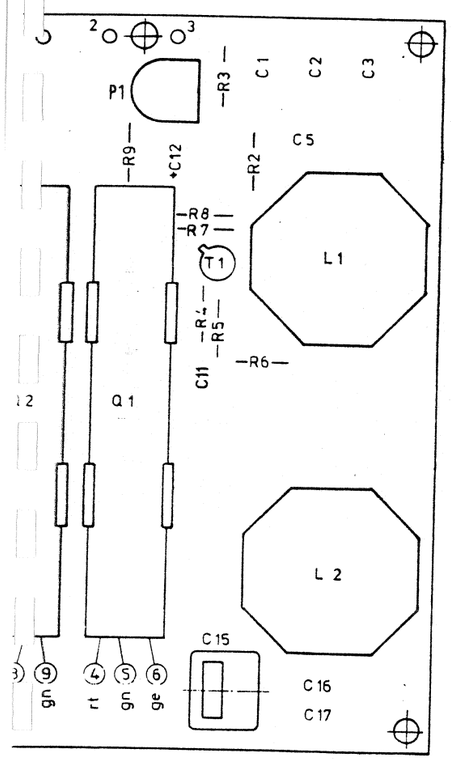

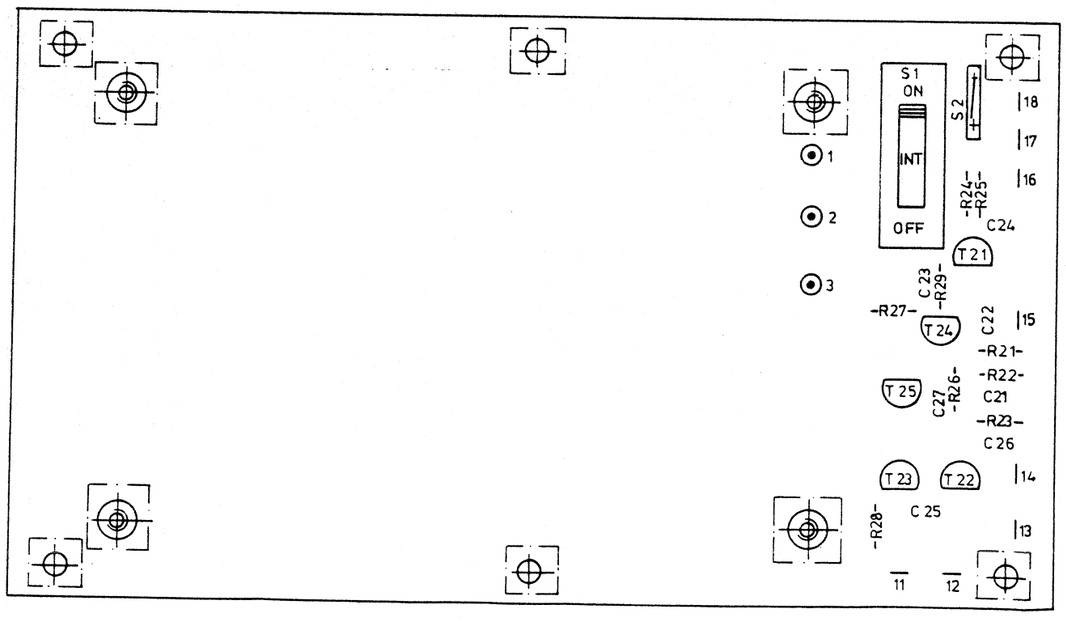

-Hz Bandpass / 100 Hz 955-AX
BANDPASS FILTER / 100 Hz
Filtre passe bande / 100 Hz
7047.009/4
a

Filtertragerkarte
FILTER CARRIER BOARD
Carte support de filtre
955 - AW
955-7046.000 / 4
a

SPM 15 / BN 955/00.06 | Serie A... | Ausg. 2
10kHz Bandpass / 100Hz
10kHz BANDPASS FILTER / 100Hz
Filtre passe bande 10kHz / 100Hz
(17)
1 Blatt
Blatt 1
955 - 7517.018 / 3
FF

2.5 Ausgangsfeld zum PSE-15 für Grundgerät BN 955/01 BN 955/00.21
2.5 Output section for PSE-15 main frame BN 955/01 BN 955/00.21
2.5 Section sortie pour PSE-15 pour appareil de base BN 955/01 BN 955/00.21

2.6 Ausgangsfeld zum PSE-15 für Grundgerät BN 955/02 BN 955/00.22
2.6 Output section for PSE-15 main frame BN 955/02 BN 955/00.22
2.6 Section sortie pour PSE-15 pour appareil de base BN 955/02 BN 955/00.22

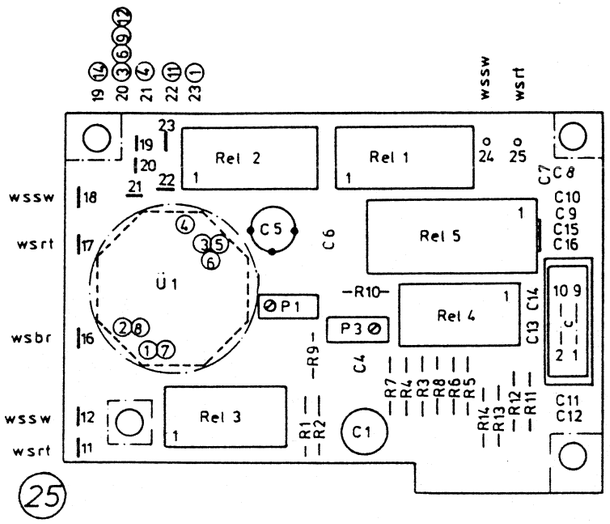

Ausgangsfeld
OUTPUT PCB
Ensemble de sortie

955-7044.002 /4 — 955-AU — 25

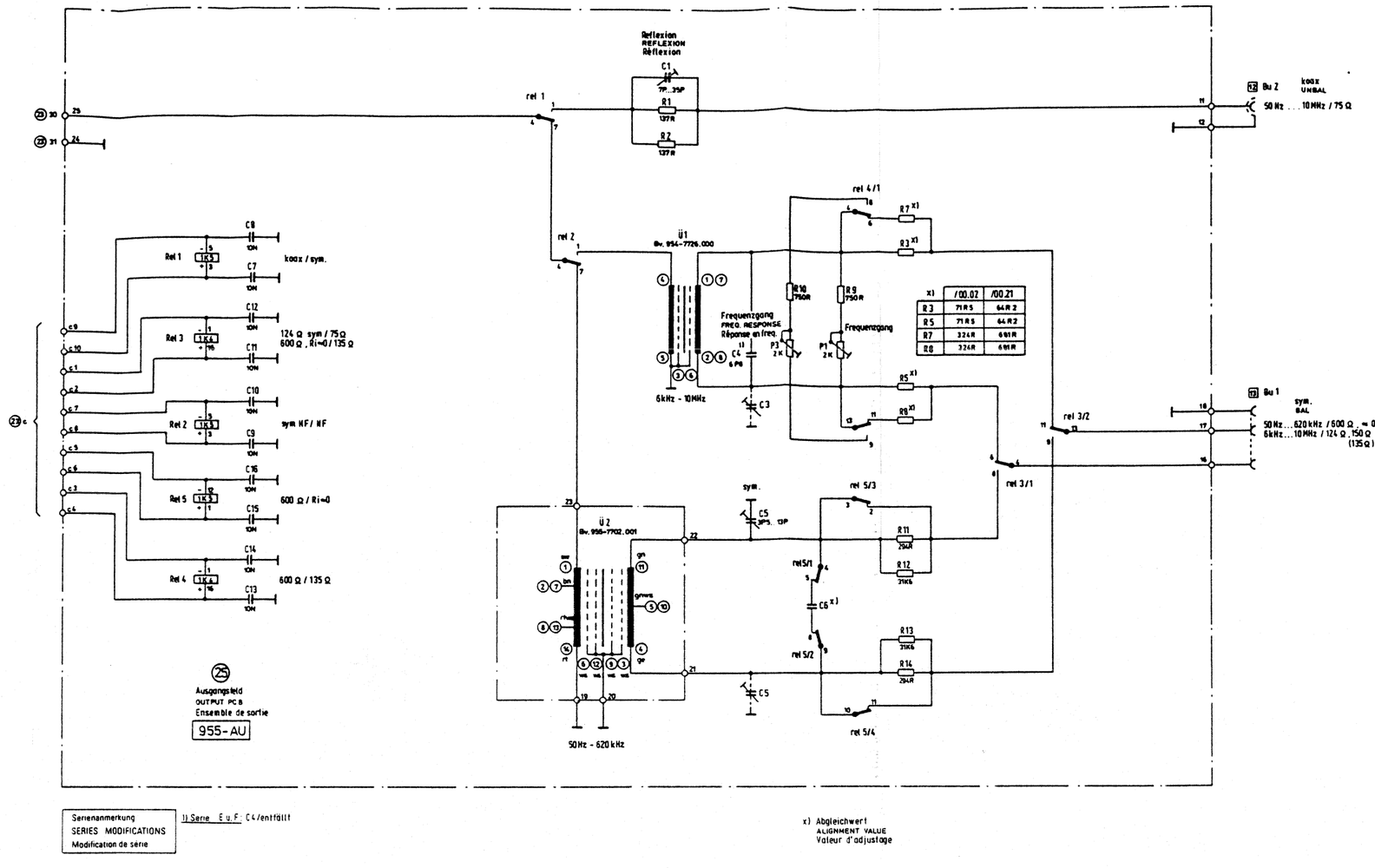

Serienanmerkung
SERIES MODIFICATIONS
Modification de série

1) Serie E u. F: C4 entfällt

x) Abgleichwert
ALIGNMENT VALUE
Valeur d'adjustage

Nur Ausführung 01
Only version 01
Uniquement pour version 01

BN 955 / 00.02 00.21	Serie E...	Ausg.
Ausgangsfeld OUTPUT PCB Ensemble de sortie (25)		1 Blatt Blatt 1
955-7525.013/3	3	FF

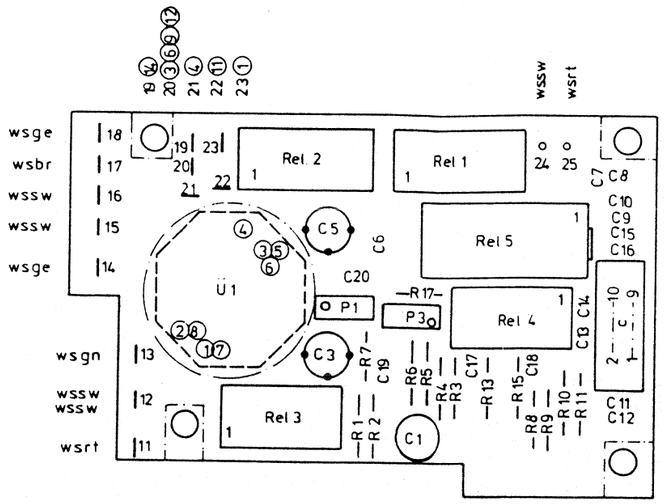

Ausgangsfeld WECO
WECO OUTPUT CONNECTOR
Ensemble de sortie WECO

25

955-7045.001/4

955-AV

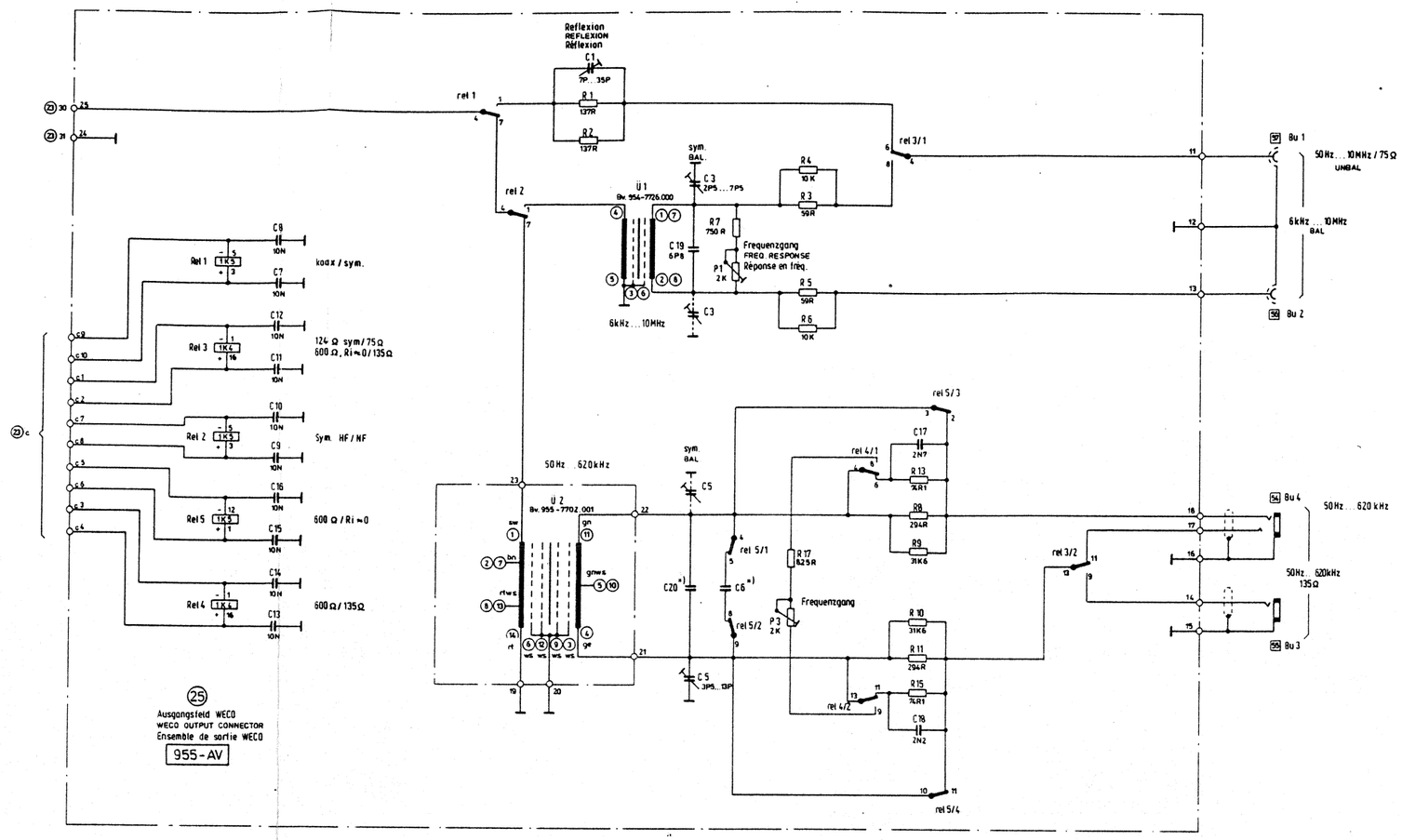

Nur Ausführung 02
Only version 02
Uniquement pour version 02

BN 955/00.22	Serie E ...	Ausg.
Ausgangsfeld WECO WECO OUTPUT CONNECTOR Ensemble de sortie WECO	25	1. Blatt Blatt 1
955-7525.505/3		FF

2.7	Geräuschberechnung in dBrnC	BN 955/00.23
2.7	Noise measurements in dBrnC	BN 955/00.23
2.7	Mesure de bruit en dBrnC	BN 955/00.23

Option BN 955/00.23, Bandbreite 1,95 kHz mit Anzeige der Geräuschleistung in dBrnC

Folgende Stromlaufpläne werden geringfügig geändert:

955-7509... 10 kHz Bandpass (955-7026) R 7 ändern in 1K37/1%/Tk50/0207
R 8 ändern in 6K49/1%/Tk50/0207
(Grunddämpfungsabgleich nach Umbau kontrollieren!)

955-7521... CPU-Karte (955-7005)

S 1	.4	.3	.2	.1	dBrnC in Gerät ...
	OFF	ON	ON	ON	Europa mit PSE
	OFF	ON	OFF	ON	Europa mit PSE, 135 Ω
	OFF	OFF	ON	ON	Europa ohne PSE
	OFF	OFF	OFF	ON	Europa ohne PSE, 135 Ω

Option BN 955/00.23, bandwidth 1.95 kHz, display of noise power level in dBrnC

The following circuit diagrams have been slightly modified:

955-7509... 10 kHz bandpass (955-7026) R 7 changed to 1K37/1%/Tk50/0207
R 8 changed to 6K49/1%/Tk50/0207
(Check basic attenuation after modification!)

955-7521... CPU board (955-7005)

S 1	.4	.3	.2	.1	dBrnC instruments for ...
	OFF	ON	ON	ON	Europe with PSE fitted
	OFF	ON	OFF	ON	Europe with PSE fitted, 135 Ω
	OFF	OFF	ON	ON	Europe without PSE fitted
	OFF	OFF	OFF	ON	Europe without PSE fitted, 135 Ω

Option BN 955/00.23, largeur de bande 1,95 kHz avec affichage de puissance de bruit en dBrnC

Les schémas suivants sont légèrement modifiés:

955-7509... passe-band 10 kHz (955-7026) R 7 modifiée en 1K37/1%/Tk50/0207
R 8 modifiée en 6K49/1%/Tk50/0207
(Contrôler l'affaiblissement fondamental après modification!)

955-7521... Carte CPU (955-7005)

S 1	.4	.3	.2	.1	dBrnC dans appareil...
	OFF	ON	ON	ON	Europe avec PSE
	OFF	ON	OFF	ON	Europe avec PSE, 135 Ω
	OFF	OFF	ON	ON	Europe sans PSE
	OFF	OFF	OFF	ON	Europe sans PSE, 135 Ω

Anmerkungen zu den Schaltteil-Listen in EDV-Ausdruck Notes for EDV-Parts Lists Remarques sur les listes des composants

Erklärung der wichtigsten Abkürzungen und der Darstellung der Daten

Benennung	Bezeichnung 1	Bezeichnung 2	
R-KOHLE	100 5% 0309		Kohleschicht-Widerstand 100 Ω 5% D x L = 3 x 9 mm Carbon Film Resistor Résistance à couche de carbone
R-METALL	2,77 K 0,1% 0207	TK 50	Metall-Schichtwiderstand 2,77 kΩ 0,1% TK 50 D x L = 2 x 7 mm Metal Film Resistor Résistance à couche métal
R-DRAHT	47 10% 2 W	WM 50 SKA 2	Drahtwiderstand 47 Ω 10% 2 Watt Mat.: WM 50, Typ SKA-2 Wirewound Resistor Résistance bobinée
R-TRIMM-CERMET	470 20% 0,5 W 1	150	Trimm-Widerstand Cermet 470 Ω 20% 0,5 W 1 Umdrehg. TK 150 PPM Adjustment Potentiometer Cermet 1-Turn Potentiomètre d'ajustment Cermet 1 tour
R-TRIM DRAHT SPINDEL	5 K 5% 0,7 W 22	70	Spindel-Trimmer Draht 5 kΩ 5% 0,7 Watt 22 Umdrehungen TK 70 Rectangular Wirewound adjustment Potentiometer 22 Turns Potentiomètre d'ajustment bobiné 22 tours
R-TRIM DRAHT SQUARE	20 K 5% 0,7 W 25	70	Square-Trimmer Draht 20 kΩ 5% 0,7 Watt 25 Umdrehungen TK 70 PPM Square Wirewound adjustment Potentiometer 25 Turns Potentiomètre d'ajustment bobiné Square 25 tours
R-VAR KOHLE	100 10/20 0,2 W LIN	260	Kohleschicht-Pot. 100 Ω - 10/+ 20 % 0,2 W linear, Drehwinkel 260° Carbonfilm Potentiometer Potentiomètre à couche de carbone
R-VAR DRAHT	5 K 3% 2 WLIN	3600 0,25%	Drahtpotentiometer 5 kΩ 3% 2 W Linear 3600° = 10-Gang Linearitätstoleranz 0,25% Wirewound Potentiometer 10-Turns Potentiomètre bobiné 10 tours
ELKO-AL	470 U 10/50 70 V		Aluminium-Elko 470 µF - 10/+50% 70 V, gepolt Aluminium Electroytic Capacitor, polarized Condensateur électrolytique à l'aluminium polarisé
ELKO-AL UNGEPOLT	100 U 40 V	EU 100/40	Aluminium-Elko ungepolt (bipolar) 100 µF 40 V Typ EU 100/40 Aluminium Electrolytic Capacitor, unpolarized Condensateur électrolytique à l'aluminium non polarisé
ELKO-TA SINT FEST	6,8 U 20% 6,3 V		Tantal-Elko Sinteranode, fester Elektrolyt 6,8 µF 20% 6,3 V Tantalum Electrolytic Capacitor, Sintered Anode dry Condensateur au tantale à électrolyte solide
C-KERAMIK EDPU	120 P 2% 63 V	N 150 1 B	Keramik-Kondensator 120 pF 2% 63 V Keramik: N 150 Typ 1 B EDPU = Kennzeichnung nach DIN 41930 Ceramic Capacitor Condensateur céramique
C-KERAMIK RDLL	88,7 P 1% 25 VEF	N 075 1 B KZK4	Keramik-Kondensator kurzzeitkonstant (10-4) 88,7 pF 1% 25 V_{eff} Material N 075 Typ 1 B Ceramic Capacitor Short-Term-Stability Condensateur céramique de stabilité de lourte durée
C-GLIMMER	487 P 0,5% 500 V	BF 48.10	Glimmer-Kondensator 487 pF 0,5% 500 V Bauform 48.10 Mica Capacitor Type 48.10 Condensateur au mica argenté
C-GLIMMER KNOPF	3900 P 5% 100 V	BF 49.25-3	Glimmer-Knopf-Kondensator 3,9 nF 5% 100 V 49.25-3 Mica Button Capacitor Condensateur bouton au mica argenté
C-KF KS	316 P 0,5% 63 V	KSM	Kunststoff-Folienkondensator Styroflex 316 pF 0,5 % 3 V Polystyrene Capacitor Condensateur polystyrène
C-KF MKT	0,068 U 10% 100 V		Metallisierter Polyester Kondensator 68 nF 10% 100 V Metallized Polyester Capacitor Condensateur polyester métallisé
C-DREH	9,0-25,0 P 1-Fachc-LIN	2222 805 90123	Drehkondensator 9-25 pF 1-fach C-Linear Typ... Variable Capacitor, Single-Section, SLC, Type... Condensateur variable, Variation linéaire en capacité
C-DREH SCHMETTERLING			Schmetterling-Kondensator Butterfly variable Capacitor Condensateur papillon

C-TRIM KER SCHEIBE	10,0-60, 0P N 1500	xxx...	Keramik Scheibentrimmer 10-60 pF Material N 1500 0,5 Umdrehungen Typ xxx ... Variable Ceramic Disc Capacitor Condensateur ajustable disque céramique
C-TRIM GLAS ROHR	0,5- 3, 0P 100PPM 12	xxx...	Glasrohrtrimmer 0,6 - 3 pF TK 100 PPM 12 Umdrehungen Typ xxx... Glass Piston Trimmer Capacitor ... 12 Turns Condensateur ajustable
C-TRIM LUFT	1,75-15, SP 45 PPM 0,5	xxx...	Lufttrimmer (Platten) 1,275 - 15,5 pF RK 45 PPM 0,5 Umdrehg. Typ xxx... Air variable Capacitor Condensateur ajustable
C-PAPIER ENTSTOER			Funkentstörkondensator R.F.-Interference-Suppression Capacitor Condensateur d' antiparasitage
L-FUNKENTSTOER			Funkentstördossel Microwaves Interference Suppression Choke Self d' antiparasitage pour ondes ultra-courtes
L-FEST	15 u 10%		Festinduktivität 15 µH 10% R.F. Molded Choke Inductance
C-KF KC	13300 P 1% 63 V	KC 1853	Polycarbonat-Kondensator 13300 pF 1% 63 V Typ KC 1853 Polycarbonate-Capacitor Condensateur à film polycarbonate à armatures
C-KF MKC	220000 P 20% 250 V	MKC 1858	Metallisierter Polycarbonat-Kondensator 220000 pF 20% 250 V Typ MKC 1858 Metallized Polycarbonate Capacitor Condensateur à film polycarbonate métallisé
C-KF KT	0,015U % 100 V	KT 1801	Polyester-Kondensator 0,015 µF 5% 100 V Typ KT 1801 Polyester Capacitor Condensateur à film polyester à armatures
C-KF MKU	10 U 10% 63 V	B 32110	Cellulose-Acetat Kondensator 10 µF 10% 63 V Typ B 32110
C-KF KP	183000 P 2% 160 V		Polypropylen-Kondensator 183000 PF 2% 160 V Polypropylene Capacitor Condensateur à film polypropylène à armatures
S-DREH	Werksinterne Daten Ersatz per Sach-Nr. bestellen		Drehschalter Rotary switch Commutateur rotatif
S-KIPP	"		Kippschalter Toggle switch Interrupteur à touche basculante
S-SCHIEBE	"		Schiebeschalter Slide switch Interrupteur à glissière
S-TASTE	"		Tastenschalter Push-button switch Commutateur à touches
S-SCHNAPP	"		Schnappschalter Micro switch Interrupteur à déclic
S-KODIER	"		Kodierschalter Thumb-Wheel switch Roue codeuse
RELAIS			
IC-... TRANS...	"	Mos	mit " Mos" sind alle Halbleiterbauelemente gekennzeichnet, die durch elektrostatische Aufladung gefährdet sind. Die hierfür gültigen Verarbeitungsvorschriften sind unbedingt einzuhalten. All semiconductors subject to damage caused by electrostatic discharge are identified with the letters "Mos". The existing regulations applied to handling these devices are to be unconditionally complied with. Tous les semi-conducteurs pouvant être détériorés par une charge électrostatique sont identifiés avec "MOS". Les consignes concernants la manipulation de ces éléments sont absolument à respecter.

1 Selektiver Pegelmesser SPM-15 BN 955/01/02
1 Selective Level Meter SPM-15 BN 955/01/02
1 Mesureur de niveau sélectif SPM-15 BN 955/01/02

S C H A L T T E I L L I S T E / P A R T - L I S T

SERIE M 0955-8401.000 SPM-15 955/01 AUSF:

BN 955/01/02

TEILE-NR PART NO	SACH-NR ITEM NO	BENENNUNG DESIGNATION	BEZEICHNUNG 1 MARKING 1	BEZEICHNUNG 2 MARKING 2	MG QU	WERKNORM REF.DESIG	BEMERKUNG NOTE	SERIE AF VERSION	C
1BU 1	0960-0000.126	MASSEBUCHSE			1				
1BU 2	0001-0032.204	EINBAUBUCHSE,GESCH.	3 A1 M OF LT 4	MAB 3	1	119/07/01			L L
1C 1	0000-7500.082	ELKO-AL	2200U 10/ 50 40V	EG 56	1	ROEDERST.			L
1C 3	0001-0004.795	C-KERAMIK EDPT	4N7 10% 63V	R 2000 2 56	1	110/02/10		C-..	L L
1C 4	0000-7500.082	ELKO-AL	2200U 10/ 50 40V	EG 56	1	ROEDERST.			L L
1C 5	0001-0041.732	ELKO-AL	47U 10/ 50 10V	B41588 56	1	110/05/40			L L
1C 6	0001-0004.821	C-KERAMIK EDPT	22N 20/ 80 40V	R10000 2 56	1	110/02/10			L L
1C 7	0001-0004.821	C-KERAMIK EDPT	22N 20/ 80 40V	R10000 2 56	1	110/02/10			L L
1C 8	0001-0004.821	C-KERAMIK EDPT	22N 20/ 80 40V	R10000 2 56	1	110/02/10			L L
1C 9	0001-0004.821	C-KERAMIK EDPT	22N 20/ 80 40V	R10000 2 56	1	110/02/10			L L
1C 11	0001-0004.821	C-KERAMIK EDPT	22N 20/ 80 40V	R10000 2 56	1	110/02/10			L L
1C 12	0001-0041.664	ELKO-AL	10U 10/ 50 40V	B41588 56	1	110/05/40			L L
1C 14	0001-0041.059	ELKO-TA SINT FEST	47U 20% 6V3	ETR-3 56	1	110/05/61		C-..	L L
1C 15	0001-0004.795	C-KERAMIK EDPT	4N7 10% 63V	R 2000 2 56	1	110/02/10		B-..	L L
1C 16	0001-0004.795	C-KERAMIK EDPT	4N7 10% 63V	R 2000 2 56	1	110/02/10		B-..	L L
1C 17	0001-0004.795	C-KERAMIK EDPT	4N7 10% 63V	R 2000 2 56	1	110/02/10		B-..	L L
1C 18	0001-0004.795	C-KERAMIK EDPT	4N7 10% 63V	R 2000 2 56	1	110/02/10		B-..	L L
1C 19	0001-0004.795	C-KERAMIK EDPT	4N7 10% 63V	R 2000 2 56	1	110/02/10		B-..	L L
1C 20	0000-7588.143	C-KERAMIK KDPU	1U 20% 50V	Z5U VP44BY105MA	1	VITRAMON		F-..	L L
1GL 1	0001-0019.405	GLEICHR SI BRUECKE	B 40C3700/2200 BG 4		1	SIEMENS		B-..	L
1GL 3	0001-0018.480	GLEICHR SI	1 N 4007 P 1		1	ITT			L L
1GL 5	0001-0018.480	GLEICHR SI	1 N 4007 P 1		1	ITT			L L
1GL 6	0001-0018.480	GLEICHR SI	1 N 4007 P 1		1	ITT			L L
1GL 7	0000-7536.881	LED GRUEN 3MM	TLHG 4402	FRUEHER: LD 37 I	1	114/03/03			L L
1GL 8	0001-0019.094	DIODE SI Z-	ZPD 10 DO 35		1	ITT			L L
1GL 9	0000-7536.881	LED GRUEN 3MM	TLHG 4402	FRUEHER: LD 37 I	1	114/03/03			L L
1GL 10	0000-7536.881	LED GRUEN 3MM	TLHG 4402	FRUEHER: LD 37 I	1	114/03/03			L L
1GL 11	0001-0064.104	DIODE SI STABI-	ZTE 2 DO 35		1	ITT		F-..	L L
1GL 15	0001-0018.846	DIODE SI REFERENZ	ZPD 5,1 ROT DO 35		1	140/03/02			L L
1GL 16	0001-0018.493	DIODE SI	1 N 4448 DO 35		1	ITT			L L
1GL 17	0001-0018.493	DIODE SI	1 N 4448 DO 35		1	ITT			L L
1IC 1	0000-7618.615	DC/DC-WANDLER	PSR 54-7I		1	MELCHER			L
1IC 2	0000-7618.631	DC/DC-WANDLER	FCR 6-1212-6 SPEZ.		1	MELCHER			L L
1IC 3	0001-0014.989	IC-DUAL OP.-VERST.	MC1458CP1 DIP 8	FRUEHER: SN72558P	1	MOTOROLA			L L
1P 1	0001-0008.296	R-TRIM CERMET LIEG	2k2 20% 0W5 1	TK 100 (ALT 17/02/08)	1	017/02/15			
1P 2	0001-0008.296	R-TRIM CERMET LIEG	2K2 20% 0W5 1	TK 100 (ALT 17/02/08)	1	017/02/15			L L
1R 3	0000-7608.816	R-METALL	68R 1% 0204	TK 50 56	1	DRALORIC			L
1R 4	0000-7519.497	R-METALL	6K81 1% 0204	TK 50 56	1	018/04/01			L L
1R 5	0000-7638.190	R-METALL	243R 1% 0411S	TK 50 56	1	018/04/01		B-..	L L
1R 6	0000-7519.484	R-METALL	332R 1% 0204	TK 50 56	1	DRALORIC			L L
1R 7	0001-0004.957	R-KOHLE	1R 5% 0411	56	1	018/03/01		C-..	L L
1R 9	0001-0006.861	R-KOHLE	390R 5% 0207	56	1	DRALORIC			L L
1R 10	0001-0006.955	R-KOHLE	2K2 5% 0207	56	1	DRALORIC			L L
1R 11	0001-0006.955	R-KOHLE	2k2 5% 0207	56	1	DRALORIC			L L
1R 12	0001-0007.035	R-KOHLE	10K 5% 0207	56	1	DRALORIC			L L
1R 13	0001-0007.006	R-KOHLE	5K6 5% 0207	56	1	DRALORIC		F-..	L L
								F-..	L

Bei Bestellung Sach-Nr. angeben!
When ordering, quote Item No.

SERIE M 0955-8401.000 SPM-15 955/01 AUSF:

TEILE-NR PART NO	SACH-NR ITEM NO	BENENNUNG DESIGNATION	BEZEICHNUNG 1 MARKING 1	BEZEICHNUNG 2 MARKING 2	MG QU	WERKNORM REF.DESIG	BEMERKUNG NOTE	SERIE AF VERSION	C
1R 14	0001-0007.035	R-KOHLE	10K 5% 0207	56	1	DRALORIC		F-..	L
1R 15	0001-0007.035	R-KOHLE	10K 5% 0207	56	1	DRALORIC		F-..	L
1R 20	0000-7630.020	R-METALL	1K96 1% 0204	TK 50 56	1	018/04/01			L
1R 21	0000-7632.455	R-METALL	16K2 1% 0204	TK 50 56	1	018/04/01		B-..	L
1R 22	0000-7559.790	R-METALL	4K02 1% 0204	TK 50 56	1	018/04/01			L
1R 23	0000-7632.471	R-METALL	28K7 1% 0204	TK 50 56	1	018/04/01		B-..	L
1R 24	0000-7585.560	R-METALL	10K 1% 0204	TK 50 56	1	018/04/01		F-..	L
1R 25	0000-7604.182	R-METALL	20K 1% 0204	TK 50 56	1	018/04/01		F-..	L
1R 26	0000-7519.523	R-METALL	41K2 1% 0204	TK 50 56	1	018/04/01		F-..	L
1R 27	0000-7608.874	R-METALL	47R5 1% 0204	TK 50 56	1	018/04/01			L
1R 30	0000-7630.046	R-METALL	7K87 1% 0204	TK 50 56	1	018/04/01			L
1R 31	0000-7585.544	R-METALL	1K 1% 0204	TK 50 56	1	018/04/01			L
1R 32	0001-0002.137	R-METALL	10K 1% 0207	TK 50 56	1	DRALORIC			L
1R 33	0000-7608.887	R-METALL	182R 1% 0204	TK 50 56	1	018/04/01			L
1S 1	0955-8001.002	S-TASTENSTREIFEN	4 17,5	BV.955-8001.002	1				L
1S 2	0843-8001.000	SPANNUNGSWAEHLER		BV 843-8001	1				L
1S 3	0000-7642.898	S-WIPP NETZ-	R-R AG 2-POL 14X12X15	57746N.A.VDE+U622	1	APR		F-..	L
1SI 1	0001-0020.588	SICHERUNG SCHMELZ-	T 0,25 /250 35A	5 X20 19195	1	115/02/01		B-..	L
1SI 2	0001-0020.863	SICHERUNG SCHMELZ-	T 3,15 /250 D 50M	5 X20 19202 D	1	115/02/01			L
1ST 1	0001-0033.245	KALTG.AUFSETZSTECKER	2P+E V LT 6A/250	6048-3 DIN 49457B	1	119/03/05			L
1T 2	0000-7586.323	TRANS SI NPN DARLING	BD 675 A TO 126		1	TFK		C-..	L
1T 3	0001-0016.518	TRANS SI NPN	BCY 59 X (D) A TO 18		1	TFK			L
1T 4	0000-7537.945	TRANS SI PNP	BD 136-16 A TO 126		1	VALVO		F-..	L
1T 5	0000-7606.245	TRANS SI NPN	BC 337-25 A TO 92		1	MOTOROLA		F-..	L
1T 6	0001-0016.518	TRANS SI NPN	BCY 59 X (D) A TO 18		1	TFK			L
1UE 1	0955-7701.015	NETZTRAFO			1			B-..	A
Zusätzliche Bauteile für Version 955/11 siehe S. 46 //See p. 46 for extra components for version 955/11// Voir p. 46 pour les composants supplémentaires pour la version 955/11									
2BU 1	0000-3713.006	TF-BUCHSE	2+E M EB LT 4	00-3713.006/4	1	119/01/05			L
2BU 2	0000-2706.001	HF-BUCHSE,ISOLIERT	UNI 9M1 75 M A	LT FL 23,5	1	119/09/04			L
2C 1	0001-0004.384	C-KERAMIK EDPT	47P 2% 63V	NP 0 1B 56	1	110/02/09			L
2C 2	0001-0069.468	C-TRIM KER SCHEIBE	7P - 35P N1500 0,5	OR 301427603 21	1	111/01/06			L
2C 3	0001-0014.086	C-TRIM KER SCHEIBE	3P5- 13P N 470 0,5	BL 301427411 21	1	111/01/06		..- M	L
2C 4	0000-7619.342	C-KERAMIK EDPU 5	15P 2% 500V	NP 0 1B 56	1	VALVO		..- M	L
2C 5	0001-0069.400	C-TRIM KER SCHEIBE	2P5- 7P5 NP 0 0,5	BR 301427125 21	1	111/01/06			L
2C 6	0000-7619.339	C-KERAMIK EDPU 5	6P8 0P25 500V	NP 0 1B 56	1	VALVO		..- M	L
2C 9	0000-7519.866	C-KF MKT	1U 10% 100V	MKT1822 NUR ERO 56	1	ROEDERST.			L
2C 10	0000-7520.460	ELKO-AL UNGEPOLT	47U 10/ 50 63V	EBU 56	1	ROEDERST.			L
2C 11	0000-7535.303	C-TRIM KER SCHEIBE	3P5- 20P NP 0 0,5	20 BR 301504114 21	1	111/01/05			L
2C 12	0001-0004.630	C-KERAMIK EDPT	330P 2% 63V	N 750 1B 56	1	110/02/09		..- M	L
2C 13	0001-0004.148	C-KERAMIK EDPT	8P2 0P25 63V	NP 0 1B 56	1	110/02/09		..- M	L
2C 21	0001-0004.818	C-KERAMIK EDPT	10N 20/100 40V	R10000 2 56	1	110/02/10			L
2C 22	0001-0004.818	C-KERAMIK EDPT	10N 20/100 40V	R10000 2 56	1	110/02/10			L
2C 23	0001-0004.818	C-KERAMIK EDPT	10N 20/100 40V	R10000 2 56	1	110/02/10			L
2C 24	0001-0004.818	C-KERAMIK EDPT	10N 20/100 40V	R10000 2 56	1	110/02/10			L

Bei Bestellung Sach-Nr. angeben!
When ordering, quote Item No.

S C H A L T T E I L L I S T E / P A R T - L I S T

SERIE M 0955-8401.000 SPM-15 955/01 AUSF:

TEILE-NR PART NO	SACH-NR ITEM NO	BENENNUNG DESIGNATION	BEZEICHNUNG 1 MARKING 1	BEZEICHNUNG 2 MARKING 2	MG QU	WERKNORM REF.DESIG	BEMERKUNG NOTE	SERIE AF VERSION	C
2C 25	0001-0004.818	C-KERAMIK EDPT	10N 20/100 40V	R10000 2 56	1	110/02/10			L
2C 26	0001-0004.818	C-KERAMIK EDPT	10N 20/100 40V	R10000 2 56	1	110/02/10			L
2C 27	0001-0004.818	C-KERAMIK EDPT	10N 20/100 40V	R10000 2 56	1	110/02/10			L
2C 28	0001-0004.818	C-KERAMIK EDPT	10N 20/100 40V	R10000 2 56	1	110/02/10			L
2C 29	0001-0004.818	C-KERAMIK EDPT	10N 20/100 40V	R10000 2 56	1	110/02/10			L
2C 30	0001-0004.818	C-KERAMIK EDPT	10N 20/100 40V	R10000 2 56	1	110/02/10			L
2C 31	0001-0004.818	C-KERAMIK EDPT	10N 20/100 40V	R10000 2 56	1	110/02/10			L
2C 32	0001-0004.818	C-KERAMIK EDPT	10N 20/100 40V	R10000 2 56	1	110/02/10			L
2L 1	0000-7556.010	L-FEST	470N 10% 1025-12	30 25 330 0R35 650MA	1	117/01/03			L
2L 2	0000-7555.972	L-FEST	220N 10% 1025-04	35 25 510 0R15 1A	1	117/01/03		--- M	L
2L 3	0000-7556.337	L-FEST	220U 10% 1025-76	30 0,8 9 21R 50MA	1	117/01/03			L
2R 1	0000-7563.854	R-METALL	126R 0%1 0411	TK 15 56	1	018/04/01			L
2R 2	0001-0002.179	R-METALL	11k 1% 0207	TK 50 56	1	DRALORIC			L
2R 3	0000-7563.841	R-METALL	152R 0%1 0411	TK 15 56	1	018/04/01			L
2R 4	0001-0002.344	R-METALL	17K4 1% 0207	TK 50 56	1	DRALORIC			L
2R 5	0000-7577.963	R-METALL	612R 0%1 0411S	TK 15 56	1	DRALORIC			L
2R 6	0001-0002.713	R-METALL	45K3 1% 0207	TK 50 56	1	DRALORIC			L
2R 7	0000-7617.360	R-METALL	150R 0%1 0411S	TK 15 56	1	018/04/01			L
2R 8	0000-7563.841	R-METALL	152R 0%1 0411	TK 15 56	1	018/04/01			L
2R 9	0001-0000.579	R-METALL	127R 1% 0207	TK 50 56	1	DRALORIC		--- M	L
2R 10	0001-0002.195	R-METALL	11K5 1% 0207	TK 50 56	1	DRALORIC		--- M	L
2R 11	0001-0000.993	R-METALL	523R 1% 0207	TK 50 56	1	DRALORIC		--- M	L
2R 12	0001-0000.935	R-METALL	432R 1% 0207	TK 50 56	1	DRALORIC		--- M	L
2R 21	0001-0006.641	R-KOHLE	10R 5% 0207	56	1	DRALORIC			L
2R 22	0001-0006.641	R-KOHLE	10R 5% 0207	56	1	DRALORIC			L
2R 23	0001-0006.641	R-KOHLE	10R 5% 0207	56	1	DRALORIC			L
2R 24	0001-0006.641	R-KOHLE	10R 5% 0207	56	1	DRALORIC			L
2R 25	0001-0006.641	R-KOHLE	10R 5% 0207	56	1	DRALORIC			L
2R 26	0001-0006.641	R-KOHLE	10R 5% 0207	56	1	DRALORIC			L
2R 27	0001-0006.641	R-KOHLE	10R 5% 0207	56	1	DRALORIC			L
2R 28	0001-0006.641	R-KOHLE	10R 5% 0207	56	1	DRALORIC			L
2R 29	0001-0006.641	R-KOHLE	10R 5% 0207	56	1	DRALORIC			L
2R 30	0001-0006.641	R-KOHLE	10R 5% 0207	56	1	DRALORIC			L
2R 31	0001-0006.641	R-KOHLE	10R 5% 0207	56	1	DRALORIC			L
2R 32	0001-0006.641	R-KOHLE	10R 5% 0207	56	1	DRALORIC			L
2REL 1	0000-7619.326	RELAIS GEPOLT BISTAB	001 AU 12V 1K5 HD	RSL12V	1	SDS			L
2REL 2	0000-7619.326	RELAIS GEPOLT BISTAB	001 AU 12V 1K5 HD	RSL12V	1	SDS		--- M	L
2REL 3	0000-7619.326	RELAIS GEPOLT BISTAB	001 AU 12V 1K5 HD	RSL12V	1	SDS		--- M	L
2REL 4	0000-7610.707	RELAIS GEPOLT BISTAB	002 AU 12V 1k4 SD	DS2E-L-12V	1	SDS		--- M	L
2REL 5	0000-7619.326	RELAIS GEPOLT BISTAB	001 AU 12V 1K5 HD	RSL12V	1	SDS			L
2REL 6	0000-7619.326	RELAIS GEPOLT BISTAB	001 AU 12V 1K5 HD	RSL12V	1	SDS			L
2UE 1	0829-7727.004	UEBERTRAGER			1				A
2UE 2	0829-7731.003	UEBERTRAGER			1				A
3BU 1	0000-1637.074	WINKELBU. 75 OHM KPL			1				L
3BU 2	0000-1637.074	WINKELBU. 75 OHM KPL			1				L

Bei Bestellung Sach-Nr. angeben!
When ordering, quote Item No.

SERIE M 0955-8401.000 SPM-15 955/01 AUSF:

TEILE-NR PART NO	SACH-NR ITEM NO	BENENNUNG DESIGNATION	BEZEICHNUNG 1 MARKING 1	BEZEICHNUNG 2 MARKING 2	MG QU	WERKNORM REF.DESIG	BEMERKUNG NOTE	SERIE AF VERSION	C
3C 2	0001-0004.449	C-KERAMIK EDPT	68P 2% 63V	NP 0 1B 56	1	110/02/09			L
3C 3	0001-0004.287	C-KERAMIK EDPT	22P 2% 63V	NP 0 1B 56	1	110/02/09			L
3C 4	0001-0069.468	C-TRIM KER SCHEIBE	7P - 35P N1500 0,5	OR 301427603 21	1	111/01/06			L
3C 5	0001-0004.478	C-KERAMIK EDPT	82P 2% 63V	NP 0 1B 56	1	110/02/09			L
3C 7	0001-0004.203	C-KERAMIK EDPT	12P 2% 63V	NP 0 1B 56	1	110/02/09			L
3C 8	0001-0068.401	C-TRIM KER SCHEIBE	4P5- 20P N 750 0,5	VI 301427502 21	1	111/01/06			L
3C 9	0001-0004.287	C-KERAMIK EDPT	22P 2% 63V	NP 0 1B 56	1	110/02/09			L
3C 10	0001-0004.449	C-KERAMIK EDPT	68P 2% 63V	NP 0 1B 56	1	110/02/09			L
3C 14	0001-0004.795	C-KERAMIK EDPT	4N7 10% 63V	R 2000 2 56	1	110/02/10		M-..	L
3C 15	0001-0010.501	C-KF MKT	1U 10% 100V	MKT1822 56	1	110/03/07			L
3C 16	0001-0041.059	ELKO-TA SINT FEST	47U 20% 6V3	ETR-3 56	1	110/05/61			L
3C 17	0001-0004.818	C-KERAMIK EDPT	10N 20/100 40V	R10000 2 56	1	110/02/10			L
3C 20	0001-0004.229	C-KERAMIK EDPT	15P 2% 63V	NP 0 1B 56	1	110/02/09			L
3C 21	0001-0004.313	C-KERAMIK EDPT	27P 2% 63V	NP 0 1B 56	1	110/02/09			L
3C 22	0001-0004.287	C-KERAMIK EDPT	22P 2% 63V	NP 0 1B 56	1	110/02/09			L
3C 23	0001-0068.391	C-TRIM KER SCHEIBE	3P - 10P N 075 0,5	SW 301427201 21	1	111/01/06			L
3C 24	0001-0041.211	ELKO-TA SINT FEST	330U 20% 6V3	ETR-5 56	1	110/05/61			L
3C 25	0001-0068.401	C-TRIM KER SCHEIBE	4P5- 20P N 750 0,5	VI 301427502 21	1	111/01/06			L
3C 26	0001-0004.575	C-KERAMIK EDPT	150P 2% 63V	N 150 1B 56	1	110/02/09			L
3C 27	0001-0004.559	C-KERAMIK EDPT	120P 2% 63V	NP 0 1B 56	1	110/02/09			L
3C 28	0001-0069.468	C-TRIM KER SCHEIBE	7P - 35P N1500 0,5	OR 301427603 21	1	111/01/06			L
3C 29	0001-0004.203	C-KERAMIK EDPT	12P 2% 63V	NP 0 1B 56	1	110/02/09			L
3C 30	0001-0004.821	C-KERAMIK EDPT	22N 20/ 80 40V	R10000 2 56	1	110/02/10			L
3C 31	0001-0040.966	ELKO-TA SINT FEST	22U 20% 16V	ETR-3 56	1	110/05/61			L
3C 40	0001-0004.229	C-KERAMIK EDPT	15P 2% 63V	NP 0 1B 56	1	110/02/09			L
3C 41	0001-0004.313	C-KERAMIK EDPT	27P 2% 63V	NP 0 1B 56	1	110/02/09			L
3C 42	0001-0004.287	C-KERAMIK EDPT	22P 2% 63V	NP 0 1B 56	1	110/02/09			L
3C 43	0001-0041.211	ELKO-TA SINT FEST	330U 20% 6V3	ETR-5 56	1	110/05/61			L
3C 44	0001-0004.229	C-KERAMIK EDPT	15P 2% 63V	NP 0 1B 56	1	110/02/09			L
3C 45	0001-0004.106	C-KERAMIK EDPT	5P6 0P25 63V	NP 0 1B 56	1	110/02/09			L
3C 47	0001-0004.818	C-KERAMIK EDPT	10N 20/100 40V	R10000 2 56	1	110/02/10			L
3C 50	0001-0041.059	ELKO-TA SINT FEST	47U 20% 6V3	ETR-3 56	1	110/05/61			L
3C 51	0001-0041.185	ELKO-TA SINT FEST	150U 20% 6V3	ETR-4 56	1	110/05/61			L
3C 52	0001-0004.821	C-KERAMIK EDPT	22N 20/ 80 40V	R10000 2 56	1	110/02/10			L
3C 53	0001-0040.966	ELKO-TA SINT FEST	22U 20% 16V	ETR-3 56	1	110/05/61			L
3C 55	0001-0004.384	C-KERAMIK EDPT	47P 2% 63V	NP 0 1B 56	1	110/02/09			L
3C 56	0000-7594.425	C-KERAMIK KDPU	220N 10% 50V	X7R VP42BY224KA	1	110/02/15			L
3C 57	0001-0004.821	C-KERAMIK EDPT	22N 20/ 80 40V	R10000 2 56	1	110/02/10			L
3C 58	0001-0004.821	C-KERAMIK EDPT	22N 20/ 80 40V	R10000 2 56	1	110/02/10			L
3C 70	0001-0004.818	C-KERAMIK EDPT	10N 20/100 40V	R10000 2 56	1	110/02/10			L
3C 71	0001-0004.818	C-KERAMIK EDPT	10N 20/100 40V	R10000 2 56	1	110/02/10			L
3C 72	0001-0004.818	C-KERAMIK EDPT	10N 20/100 40V	R10000 2 56	1	110/02/10			L
3C 73	0001-0004.818	C-KERAMIK EDPT	10N 20/100 40V	R10000 2 56	1	110/02/10			L
3C 74	0001-0004.818	C-KERAMIK EDPT	10N 20/100 40V	R10000 2 56	1	110/02/10			L
3C 75	0001-0004.818	C-KERAMIK EDPT	10N 20/100 40V	R10000 2 56	1	110/02/10			L
3C 76	0001-0004.818	C-KERAMIK EDPT	10N 20/100 40V	R10000 2 56	1	110/02/10			L
3C 77	0001-0004.818	C-KERAMIK EDPT	10N 20/100 40V	R10000 2 56	1	110/02/10			L
3C 78	0001-0004.818	C-KERAMIK EDPT	10N 20/100 40V	R10000 2 56	1	110/02/10			L
3C 79	0001-0004.818	C-KERAMIK EDPT	10N 20/100 40V	R10000 2 56	1	110/02/10			L
3C 80	0001-0004.818	C-KERAMIK EDPT	10N 20/100 40V	R10000 2 56	1	110/02/10			L
3C 81	0001-0004.818	C-KERAMIK EDPT	10N 20/100 40V	R10000 2 56	1	110/02/10			L

Bei Bestellung Sach-Nr. angeben!
When ordering, quote Item No.

SERIE M 0955-8401.000 SPM-15 955/01 AUSF:

TEILE-NR PART NO	SACH-NR ITEM NO	BENENNUNG DESIGNATION	BEZEICHNUNG 1 MARKING 1	BEZEICHNUNG 2 MARKING 2	MG QU	WERKNORM REF.DESIG	BEMERKUNG NOTE	SERIE AF VERSION	C
3C 82	0001-0004.818	C-KERAMIK EDPT	10N 20/100 40V	R10000 2 56	1	110/02/10			L
3C 83	0001-0004.818	C-KERAMIK EDPT	10N 20/100 40V	R10000 2 56	1	110/02/10			L
3C 84	0001-0004.818	C-KERAMIK EDPT	10N 20/100 40V	R10000 2 56	1	110/02/10			L
3C 85	0001-0004.818	C-KERAMIK EDPT	10N 20/100 40V	R10000 2 56	1	110/02/10			L
3C 86	0001-0004.818	C-KERAMIK EDPT	10N 20/100 40V	R10000 2 56	1	110/02/10			L
3C 87	0001-0004.818	C-KERAMIK EDPT	10N 20/100 40V	R10000 2 56	1	110/02/10			L
3GL 1	0001-0018.493	DIODE SI	1 N 4448 DO 35		1	ITT			L
3GL 2	0001-0018.493	DIODE SI	1 N 4448 DO 35		1	ITT			L
3GL 3	0001-0064.159	DIODE SI STABI-	ZTE 1,5 DO 35		1	ITT			L
3GL 4	0001-0018.493	DIODE SI	1 N 4448 DO 35		1	ITT			L
3GL 5	0001-0018.493	DIODE SI	1 N 4448 DO 35		1	ITT			L
3IC 1	0000-7583.067	IC-OP.-VERST. FET	ICL7615DCPA DIP 8		1	INTERSIL			L
3L 2	0000-7556.214	L-FEST	22U 10% 1025-52	45 2,5 25 3R3 130MA	1	117/01/03			L
3L 3	0000-7556.175	L-FEST	10U 10% 1025-44	55 7,9 50 3R4 130MA	1	117/01/03			L
3L 4	0000-7556.133	L-FEST	4U7 10% 1025-36	42 7,9 75 1R2 210MA	1	117/01/03			L
3L 5	0000-7556.117	L-FEST	3U3 10% 1025-32	40 7,9 90 0R85 260MA	1	117/01/03			L
3L 6	0000-7556.117	L-FEST	3U3 10% 1025-32	40 7,9 90 0R85 260MA	1	117/01/03			L
3L 7	0000-7556.191	L-FEST	15U 10% 1025-48	45 2,5 35 2R8 140MA	1	117/01/03			L
3P 1	0001-0008.225	R-TRIM CERMET LIEG	100R 20% 0W5 1	TK 100 (ALT 17/02/08)	1	017/02/15			L
3P 2	0001-0008.306	R-TRIM CERMET LIEG	4K7 20% 0W5 1	TK 100 (ALT 17/02/08)	1	017/02/15			L
3P 3	0001-0008.270	R-TRIM CERMET LIEG	1K 20% 0W5 1	TK 100 (ALT 17/02/08)	1	017/02/15			L
3P 4	0001-0008.241	R-TRIM CERMET LIEG	220R 20% 0W5 1	TK 100 (ALT 17/02/08)	1	017/02/15			L
3P 5	0001-0008.335	R-TRIM CERMET LIEG	47K 20% 0W5 1	TK 100 (ALT 17/02/08)	1	017/02/15			L
3P 6	0001-0008.225	R-TRIM CERMET LIEG	100R 20% 0W5 1	TK 100 (ALT 17/02/08)	1	017/02/15			L
3P 8	0001-0008.225	R-TRIM CERMET LIEG	100R 20% 0W5 1	TK 100 (ALT 17/02/08)	1	017/02/15		..- P	L
3R 1	0001-0000.456	R-METALL	75R 1% 0207	TK 50 56	1	DRALORIC			L
3R 2	0001-0006.683	R-KOHLE	22R 5% 0207	56	1	DRALORIC			L
3R 3	0000-7601.512	R-METALL	9K 0%1 0207	TK 15 56	1	018/04/01			L
3R 4	0000-7601.402	R-METALL	1K11 0%1 0207	TK 15 56	1	018/04/01			L
3R 5	0000-7601.512	R-METALL	9K 0%1 0207	TK 15 56	1	018/04/01			L
3R 6	0000-7601.402	R-METALL	1K11 0%1 0207	TK 15 56	1	018/04/01			L
3R 7	0001-0006.683	R-KOHLE	22R 5% 0207	56	1	DRALORIC			L
3R 8	0001-0002.276	R-METALL	14K7 1% 0207	TK 50 56	1	DRALORIC			L
3R 9	0000-7585.418	R-METALL	10R 1% 0204	TK 50 56	1	018/04/01		C-..	L
3R 10	0000-7519.471	R-METALL	100R 1% 0204	TK 50 56	1	018/04/01		E-..	L
3R 12	0001-0007.116	R-KOHLE	47K 5% 0207	56	1	018/03/01			L
3R 13	0001-0006.751	R-KOHLE	68R 5% 0207	56	1	DRALORIC			L
3R 14	0001-0006.722	R-KOHLE	47R 5% 0207	56	1	DRALORIC			L
3R 15	0001-0003.592	R-METALL	365R 1% 0207	TK 50 56	1	DRALORIC			L
3R 16	0001-0001.345	R-METALL	1K47 1% 0207	TK 50 56	1	DRALORIC			L
3R 17	0001-0006.751	R-KOHLE	68R 5% 0207	56	1	DRALORIC			L
3R 18	0001-0007.116	R-KOHLE	47K 5% 0207	56	1	018/03/01			L
3R 19	0001-0006.942	R-KOHLE	1K8 5% 0207	56	1	DRALORIC			L
3R 20	0001-0006.722	R-KOHLE	47R 5% 0207	56	1	DRALORIC			L
3R 21	0001-0007.116	R-KOHLE	47K 5% 0207	56	1	018/03/01			L
3R 22	0001-0007.116	R-KOHLE	47K 5% 0207	56	1	018/03/01			L

SERIE M 0955-8401.000 SPM-15 955/01 AUSF:

TEILE-NR PART NO	SACH-NR ITEM NO	BENENNUNG DESIGNATION	BEZEICHNUNG 1 MARKING 1			BEZEICHNUNG 2 MARKING 2		MG QU	WERKNORM REF.DESIG	BEMERKUNG NOTE	SERIE AF VERSION	C
3R 23	0001-0007.158	R-KOHLE	100K	5%	0207		56	1	018/03/01			L
3R 24	0001-0006.751	R-KOHLE	68R	5%	0207		56	1	DRALORIC			L
3R 29	0001-0001.138	R-METALL	768R	1%	0207	TK 50	56	1	DRALORIC			L
3R 30	0001-0006.858	R-KOHLE	330R	5%	0207		56	1	DRALORIC			L
3R 31	0001-0006.751	R-KOHLE	68R	5%	0207		56	1	DRALORIC			L
3R 32	0001-0003.770	R-METALL	511R	1%	0207	TK 50	56	1	DRALORIC			L
3R 33	0001-0006.861	R-KOHLE	390R	5%	0207		56	1	DRALORIC			L
3R 34	0001-0001.361	R-METALL	1K54	1%	0207	TK 50	56	1	DRALORIC			L
3R 35	0001-0000.896	R-METALL	392R	1%	0207	TK 50	56	1	DRALORIC			L
3R 36	0001-0006.887	R-KOHLE	560R	5%	0207		56	1	DRALORIC			L
3R 37	0001-0000.485	R-METALL	84R5	1%	0207	TK 50	56	1	DRALORIC			L
3R 38	0001-0006.751	R-KOHLE	68R	5%	0207		56	1	DRALORIC			L
3R 39	0001-0000.799	R-METALL	301R	1%	0207	TK 50	56	1	DRALORIC			L
3R 40	0001-0006.722	R-KOHLE	47R	5%	0207		56	1	DRALORIC			L
3R 41	0000-7642.665	R-METALL	19R3	0%5	0207	TK 50	56	1	018/04/01		E-..	L
3R 42	0001-0006.751	R-KOHLE	68R	5%	0207		56	1	DRALORIC			L
3R 43	0001-0006.968	R-KOHLE	2K7	5%	0207		56	1	DRALORIC			L
3R 44	0001-0007.190	R-KOHLE	220K	5%	0207		56	1	018/03/01			L
3R 50	0001-0006.751	R-KOHLE	68R	5%	0207		56	1	DRALORIC			L
3R 51	0001-0018.587	R-METALL	845R	1%	0207	TK 50	56	1	DRALORIC			L
3R 52	0001-0006.858	R-KOHLE	330R	5%	0207		56	1	DRALORIC			L
3R 53	0001-0003.767	R-METALL	576R	1%	0207	TK 50	56	1	DRALORIC			L
3R 54	0001-0006.751	R-KOHLE	68R	5%	0207		56	1	DRALORIC		..- N	L
3R 55	0001-0006.861	R-KOHLE	390R	5%	0207		56	1	DRALORIC			L
3R 56	0001-0059.232	R-METALL	1K65	1%	0207	TK 50	56	1	DRALORIC			L
3R 57	0001-0000.922	R-METALL	422R	1%	0207	TK 50	56	1	DRALORIC			L
3R 58	0001-0006.887	R-KOHLE	560R	5%	0207		56	1	DRALORIC			L
3R 59	0001-0006.751	R-KOHLE	68R	5%	0207		56	1	DRALORIC			L
3R 60	0001-0018.532	R-METALL	115R	1%	0207	TK 50	56	1	DRALORIC			L
3R 61	0001-0000.841	R-METALL	340R	1%	0207	TK 50	56	1	DRALORIC			L
3R 62	0001-0000.647	R-METALL	174R	1%	0207	TK 50	56	1	DRALORIC			L
3R 63	0001-0000.294	R-METALL	37R4	1%	0207	TK 50	56	1	DRALORIC			L
3R 64	0001-0006.722	R-KOHLE	47R	5%	0207		56	1	DRALORIC			L
3R 65	0001-0006.913	R-KOHLE	1K	5%	0207		56	1	DRALORIC			L
3R 66	0001-0007.158	R-KOHLE	100K	5%	0207		56	1	018/03/01			L
3R 70	0001-0006.942	R-KOHLE	1K8	5%	0207		56	1	DRALORIC			L
3R 71	0001-0006.900	R-KOHLE	820R	5%	0207		56	1	DRALORIC			L
3R 72	0001-0006.939	R-KOHLE	1K5	5%	0207		56	1	DRALORIC			L
3R 73	0001-0006.751	R-KOHLE	68R	5%	0207		56	1	DRALORIC			L
3R 74	0001-0006.751	R-KOHLE	68R	5%	0207		56	1	DRALORIC			L
3R 75	0001-0003.657	R-METALL	105R	1%	0207	TK 50	56	1	DRALORIC			L
3R 76	0001-0003.657	R-METALL	105R	1%	0207	TK 50	56	1	DRALORIC			L
3R 77	0001-0006.751	R-KOHLE	68R	5%	0207		56	1	DRALORIC			L
3R 78	0001-0006.751	R-KOHLE	68R	5%	0207		56	1	DRALORIC			L
3R 79	0001-0020.067	R-METALL	147R	1%	0207	TK 50	56	1	DRALORIC			L
3R 80	0001-0020.067	R-METALL	147R	1%	0207	TK 50	56	1	DRALORIC			L
3R 81	0001-0003.563	R-METALL	124R	1%	0207	TK 50	56	1	DRALORIC			L
3R 82	0001-0006.777	R-KOHLE	82R	5%	0207		56	1	DRALORIC			L
3R 83	0001-0006.751	R-KOHLE	68R	5%	0207		56	1	DRALORIC			L
3R 84	0001-0006.968	R-KOHLE	2K7	5%	0207		56	1	DRALORIC			L
3R 85	0001-0007.190	R-KOHLE	220K	5%	0207		56	1	018/03/01			L

SERIE M 0955-8401.000 SPM-15 955/01 AUSF:

TEILE-NR PART NO	SACH-NR ITEM NO	BENENNUNG DESIGNATION	BEZEICHNUNG 1 MARKING 1	BEZEICHNUNG 2 MARKING 2	MG QU	WERKNORM REF.DESIG	BEMERKUNG NOTE	SERIE AF VERSION	C
3R 90	0001-0006.887	R-KOHLE	560R 5% 0207	56	1	DRALORIC			L
3R 91	0001-0006.641	R-KOHLE	10R 5% 0207	56	1	DRALORIC			L
3R 92	0001-0007.103	R-KOHLE	39K 5% 0207	56	1	018/03/01			L
3R 93	0001-0007.048	R-KOHLE	12K 5% 0207	56	1	DRALORIC			L
3R 94	0001-0007.284	R-KOHLE	1M 5% 0207	56	1	DRALORIC			L
3R 99	0000-7555.228	0-OHM WIDERSTAND	0,6	100-902	1	VITROHM			S
3REL 1	0000-7619.326	RELAIS GEPOLT BISTAB	001 AU 12V 1K5 HD	RSL12V	1	SDS			L
3REL 2	0000-7619.326	RELAIS GEPOLT BISTAB	001 AU 12V 1K5 HD	RSL12V	1	SDS			L
3REL 3	0000-7619.326	RELAIS GEPOLT BISTAB	001 AU 12V 1K5 HD	RSL12V	1	SDS			L
3REL 4	0000-7619.326	RELAIS GEPOLT BISTAB	001 AU 12V 1K5 HD	RSL12V	1	SDS			L
3REL 5	0000-7619.326	RELAIS GEPOLT BISTAB	001 AU 12V 1K5 HD	RSL12V	1	SDS			L
3REL 6	0000-7619.326	RELAIS GEPOLT BISTAB	001 AU 12V 1K5 HD	RSL12V	1	SDS			L
3REL 7	0000-7619.326	RELAIS GEPOLT BISTAB	001 AU 12V 1K5 HD	RSL12V	1	SDS			L
3REL 8	0000-7619.326	RELAIS GEPOLT BISTAB	001 AU 12V 1K5 HD	RSL12V	1	SDS			L
3REL 9	0000-7619.326	RELAIS GEPOLT BISTAB	001 AU 12V 1K5 HD	RSL12V	1	SDS			L
3S 1	0000-7567.999	S-DUAL-IN-LINE	1 100 AU SCHIEBE-	09 10000 39	1	013/06/06			L
3S 2	0000-7567.999	S-DUAL-IN-LINE	1 100 AU SCHIEBE-	09 10000 39	1	013/06/06			L
3ST 1	0855-0007.005	STECKER	BN 855 A 2 KPL		1				L
3T 1	0829-9365.008	TRANS SI NPN	2 N 930 A TO 18		1				L
3T 2	0829-9365.008	TRANS SI NPN	2 N 930 A TO 18		1				L
3T 3	0000-7619.287	TRANS SI N VMOS	BS 170 G TO 92	MOS	1	ITT			L
3T 4	0000-7598.971	TRANS SI P DMOS	BS 250 G TO 92		1	ITT			L
3T 5	0829-9365.008	TRANS SI NPN	2 N 930 A TO 18		1				L
3T 6	0001-0016.712	TRANS SI PNP	2 N 4035 (BFX48) A TO 18		1	SGS			L
3T 7	0001-0016.903	TRANS SI NPN	BFY 90 A TO 72		1	SIEMENS			L
3T 8	0001-0016.518	TRANS SI NPN	BCY 59 X (D) A TO 18		1	TFK			L
3T 9	0001-0016.903	TRANS SI NPN	BFY 90 A TO 72		1	SIEMENS			L
3T 10	0001-0016.712	TRANS SI PNP	2 N 4035 (BFX48) A TO 18		1	SGS			L
3T 11	0001-0016.903	TRANS SI NPN	BFY 90 A TO 72		1	SIEMENS			L
3T 12	0000-7564.219	TRANS SI N VMOS	2 N 6660 G TO 39	MOS	1	SILICONIX			L
3T 13	0001-0016.712	TRANS SI PNP	2 N 4035 (BFX48) A TO 18		1	SGS			L
3T 14	0000-7525.698	TRANS SI NPN	2 N 3227 A TO 18	NUR MOTOROLA	1	MOTOROLA			L
3T 15	0001-0016.712	TRANS SI PNP	2 N 4035 (BFX48) A TO 18		1	SGS			L
3T 16	0000-7525.698	TRANS SI NPN	2 N 3227 A TO 18	NUR MOTOROLA	1	MOTOROLA			L
3T 17	0001-0016.518	TRANS SI NPN	BCY 59 X (D) A TO 18		1	TFK			L
4C 1	0001-0069.468	C-TRIM KER SCHEIBE	7P - 35P N1500 0,5	OR 301427603 21	1	111/01/06			L
4C 2	0001-0004.148	C-KERAMIK EDPT	8P2 0P25 63V	NP 0 1B 56	1	110/02/09			L
4C 3	0001-0059.274	C-TRIM KER SCHEIBE	1P - 3P NP 0 0,5	3 BR 301504121 21	1	111/01/05			L
4C 4	0001-0004.410	C-KERAMIK EDPT	56P 2% 63V	NP 0 1B 56	1	110/02/09			L
4C 5	0001-0004.313	C-KERAMIK EDPT	27P 2% 63V	NP 0 1B 56	1	110/02/09			L
4C 6	0001-0068.401	C-TRIM KER SCHEIBE	4P5- 20P N 750 0,5	VI 301427502 21	1	111/01/06			L
4C 7	0001-0004.122	C-KERAMIK EDPT	6P8 0P25 63V	NP 0 1B 56	1	110/02/09			L
4C 8	0001-0004.410	C-KERAMIK EDPT	56P 2% 63V	NP 0 1B 56	1	110/02/09			L
4C 9	0001-0004.229	C-KERAMIK EDPT	15P 2% 63V	NP 0 1B 56	1	110/02/09			L
4C 10	0001-0068.401	C-TRIM KER SCHEIBE	4P5- 20P N 750 0,5	VI 301427502 21	1	111/01/06			L

Bei Bestellung Sach-Nr. angeben!
When ordering, quote Item No.

SERIE M 0955-8401.000 SPM-15 955/01 AUSF:

TEILE-NR PART NO	SACH-NR ITEM NO	BENENNUNG DESIGNATION	BEZEICHNUNG 1 MARKING 1	BEZEICHNUNG 2 MARKING 2	MG QU	WERKNORM REF.DESIG	BEMERKUNG NOTE	SERIE AF VERSION	C
6R 1	0001-0006.735	R-KOHLE	56R 5% 0207	56	1	DRALORIC			L
6R 2	0001-0006.667	R-KOHLE	15R 5% 0207	56	1	DRALORIC			L
6R 5	0001-0001.921	R-METALL	6K04 1% 0207	TK 50 56	1	DRALORIC			L
6R 6	0001-0002.085	R-METALL	8K87 1% 0207	TK 50 56	1	DRALORIC			L
6R 7	0001-0003.563	R-METALL	124R 1% 0207	TK 50 56	1	DRALORIC			L
6R 9	0001-0000.621	R-METALL	158R 1% 0207	TK 50 56	1	DRALORIC			L
6R 11	0001-0003.563	R-METALL	124R 1% 0207	TK 50 56	1	DRALORIC			L
6R 12	0001-0006.751	R-KOHLE	68R 5% 0207	56	1	DRALORIC			L
6R 13	0001-0001.921	R-METALL	6K04 1% 0207	TK 50 56	1	DRALORIC			L
6R 14	0001-0002.085	R-METALL	8K87 1% 0207	TK 50 56	1	DRALORIC			L
6R 16	0001-0006.939	R-KOHLE	1K5 5% 0207	56	1	DRALORIC			L
6R 17	0001-0001.154	R-METALL	825R 1% 0207	TK 50 56	1	DRALORIC			L
6R 20	0001-0003.563	R-METALL	124R 1% 0207	TK 50 56	1	DRALORIC			L
6R 21	0001-0001.714	R-METALL	3K74 1% 0207	TK 50 56	1	DRALORIC			L
6R 22	0001-0006.751	R-KOHLE	68R 5% 0207	56	1	DRALORIC			L
6R 23	0001-0001.604	R-METALL	2K87 1% 0207	TK 50 56	1	DRALORIC			L
6R 24	0001-0000.980	R-METALL	499R 1% 0207	TK 50 56	1	DRALORIC			L
6R 26	0001-0001.112	R-METALL	732R 1% 0207	TK 50 56	1	DRALORIC			L
6R 28	0001-0000.980	R-METALL	499R 1% 0207	TK 50 56	1	DRALORIC			L
6R 29	0001-0006.751	R-KOHLE	68R 5% 0207	56	1	DRALORIC			L
6R 30	0001-0006.751	R-KOHLE	68R 5% 0207	56	1	DRALORIC			L
6R 31	0001-0001.714	R-METALL	3K74 1% 0207	TK 50 56	1	DRALORIC			L
6R 32	0001-0001.604	R-METALL	2K87 1% 0207	TK 50 56	1	DRALORIC			L
6R 33	0001-0065.323	R-METALL	95R3 1% 0207	TK 50 56	1	DRALORIC			L
6T 1	0001-0016.903	TRANS SI NPN	BFY 90 A TO 72		1	SIEMENS			L
6T 2	0001-0016.903	TRANS SI NPN	BFY 90 A TO 72		1	SIEMENS			L
6T 3	0001-0016.903	TRANS SI NPN	BFY 90 A TO 72		1	SIEMENS			L
6T 4	0001-0016.903	TRANS SI NPN	BFY 90 A TO 72		1	SIEMENS			L
6T 5	0001-0016.903	TRANS SI NPN	BFY 90 A TO 72		1	SIEMENS			L
6T 6	0001-0016.903	TRANS SI NPN	BFY 90 A TO 72		1	SIEMENS			L
7C 1	0001-0004.041	C-KERAMIK EDPT	3P3 0P25 63V	NP 0 1B 56	1	110/02/09			L
7C 2	0001-0004.083	C-KERAMIK EDPT	4P7 0P25 63V	NP 0 1B 56	1	110/02/09			L
7C 3	0001-0004.834	C-KERAMIK EDPT	1P 0P25 63V	P 100 1B 56	1	110/02/09			L
7C 4	0001-0004.106	C-KERAMIK EDPT	5P6 0P25 63V	NP 0 1B 56	1	110/02/09			L
7C 5	0001-0004.261	C-KERAMIK EDPT	18P 2% 63V	N 150 1B 56	1	110/02/09			L
7C 6	0000-7547.223	C-TRIM KER SCHEIBE	2P5- 5P NP 0 0,5	PKT BR 301504111 21	1	111/01/05			L
7C 7	0000-7547.223	C-TRIM KER SCHEIBE	2P5- 5P NP 0 0,5	PKT BR 301504111 21	1	111/01/05			L
7C 8	0001-0004.261	C-KERAMIK EDPT	18P 2% 63V	N 150 1B 56	1	110/02/09			L
7C 9	0001-0004.009	C-KERAMIK EDPT	2P2 0P25 63V	NP 0 1B 56	1	110/02/09			L
7C 10	0001-0004.834	C-KERAMIK EDPT	1P 0P25 63V	P 100 1B 56	1	110/02/09			L
7C 11	0001-0004.025	C-KERAMIK EDPT	2P7 0P25 63V	NP 0 1B 56	1	110/02/09			L
7L 1	0000-7564.167	L-FEST	1U8 10% 1537-18	33 7,9 135 OR65 525MA	1	117/01/02			L
7L 2	0829-7827.001	SPULE			1				A
7L 3	0000-7564.167	L-FEST	1U8 10% 1537-18	33 7,9 135 OR65 525MA	1	117/01/02			L
7L 4	0000-7564.167	L-FEST	1U8 10% 1537-18	33 7,9 135 OR65 525MA	1	117/01/02			L
7L 5	0829-7827.001	SPULE			1				A
7L 6	0000-7564.170	L-FEST	ABGLEICHW. 1537-..		1	117/01/02			I

Bei Bestellung Sach-Nr. angeben!
When ordering, quote Item No.

SERIE M 0955-8401.000 SPM-15 955/01 AUSF:

TEILE-NR PART NO	SACH-NR ITEM NO	BENENNUNG DESIGNATION	BEZEICHNUNG 1 MARKING 1	BEZEICHNUNG 2 MARKING 2	MG QU	WERKNORM REF.DESIG	BEMERKUNG NOTE	SERIE AF VERSION	C
7Q 1	0829-9702.001	FILTERQUARZ	39.995,500KHZ HC26/U		1				L
7Q 2	0829-9702.001	FILTERQUARZ	39.995,500KHZ HC26/U		1				L
7Q 3	0829-9701.002	FILTERQUARZ	40.020,000KHZ HC26/U		1				L
7UE 1	0829-7730.004	UEBERTRAGER			1				A
7UE 2	0829-7730.004	UEBERTRAGER			1				A
8C 1	0001-0004.698	C-KERAMIK EDPT	1N 10% 63V	R 2000 2 56	1	110/02/10			L
8C 2	0001-0004.818	C-KERAMIK EDPT	10N 20/100 40V	R10000 2 56	1	110/02/10			L
8C 3	0001-0004.818	C-KERAMIK EDPT	10N 20/100 40V	R10000 2 56	1	110/02/10			L
8C 4	0001-0004.818	C-KERAMIK EDPT	10N 20/100 40V	R10000 2 56	1	110/02/10			L
8C 5	0001-0004.698	C-KERAMIK EDPT	1N 10% 63V	R 2000 2 56	1	110/02/10			L
8C 6	0001-0004.698	C-KERAMIK EDPT	1N 10% 63V	R 2000 2 56	1	110/02/10			L
8C 8	0001-0004.818	C-KERAMIK EDPT	10N 20/100 40V	R10000 2 56	1	110/02/10			L
8C 9	0001-0004.821	C-KERAMIK EDPT	22N 20/ 80 40V	R10000 2 56	1	110/02/10			L
8C 10	0001-0041.114	ELKO-TA SINT FEST	68U 20% 16V	ETR-4 56	1	110/05/61			L
8C 11	0001-0004.698	C-KERAMIK EDPT	1N 10% 63V	R 2000 2 56	1	110/02/10			L
8C 12	0001-0004.698	C-KERAMIK EDPT	1N 10% 63V	R 2000 2 56	1	110/02/10			L
8C 16	0855-0022.006	C-KERAMIK DDMZ	4N7 20/ 80 63V	D 6000 2 04	1				L
8C 18	0001-0004.821	C-KERAMIK EDPT	22N 20/ 80 40V	R10000 2 56	1	110/02/10			L
8C 19	0001-0004.818	C-KERAMIK EDPT	10N 20/100 40V	R10000 2 56	1	110/02/10			L
8C 20	0001-0040.775	ELKO-TA SINT FEST	3U3 20% 16V	ETR-1 56	1	110/05/61			L
8C 21	0001-0004.672	C-KERAMIK EDPT	560P 10% 63V	R 2000 2 56	1	110/02/10			L
8C 22	0001-0041.198	ELKO-TA SINT FEST	150U 20% 16V	ETR-5 56	1	110/05/61			L
8C 23	0001-0004.672	C-KERAMIK EDPT	560P 10% 63V	R 2000 2 56	1	110/02/10			L
8C 24	0001-0040.775	ELKO-TA SINT FEST	3U3 20% 16V	ETR-1 56	1	110/05/61			L
8C 26	0001-0004.559	C-KERAMIK EDPT	120P 2% 63V	NP 0 1B 56	1	110/02/09			L
8C 28	0001-0004.818	C-KERAMIK EDPT	10N 20/100 40V	R10000 2 56	1	110/02/10			L
8C 29	0001-0004.821	C-KERAMIK EDPT	22N 20/ 80 40V	R10000 2 56	1	110/02/10			L
8C 30	0001-0004.698	C-KERAMIK EDPT	1N 10% 63V	R 2000 2 56	1	110/02/10			L
8C 31	0001-0004.821	C-KERAMIK EDPT	22N 20/ 80 40V	R10000 2 56	1	110/02/10			L
8C 32	0001-0004.818	C-KERAMIK EDPT	10N 20/100 40V	R10000 2 56	1	110/02/10			L
8C 33	0001-0004.698	C-KERAMIK EDPT	1N 10% 63V	R 2000 2 56	1	110/02/10			L
8C 34	0001-0004.504	C-KERAMIK EDPT	100P 2% 63V	NP 0 1B 56	1	110/02/09			L
8IC 1	0001-0016.330	IC-DUAL HF-VERST.	CA3049T TO 101	MOS	1	RCA			L
8IC 2	0000-7600.623	IC-DUAL DIFF.-VERST.	CA3102E DIP 14		1	RCA			L
8L 1	0000-7556.146	L-FEST	5U6 10% 1025-38	45 7,9 65 1R8 190MA	1	117/01/03			L
8L 2	0000-7556.146	L-FEST	5U6 10% 1025-38	45 7,9 65 1R8 190MA	1	117/01/03			L
8L 5	0000-7556.146	L-FEST	5U6 10% 1025-38	45 7,9 65 1R8 190MA	1	117/01/03			L
8L 6	0001-0043.125	L-FEST	100N 10% 1025-94	38 25 650 R08 1A2	1	117/01/03			L
8L 7	0000-7556.146	L-FEST	5U6 10% 1025-38	45 7,9 65 1R8 190MA	1	117/01/03			L
8P 1	0000-7511.097	R-TRIM DRAHT SQUARE	200R 5% 0W7 25	TK 70	1	017/04/05			L
8R 1	0001-0065.323	R-METALL	95R3 1% 0207	TK 50 56	1	DRALORIC			L
8R 2	0001-0001.714	R-METALL	3K74 1% 0207	TK 50 56	1	DRALORIC			L
8R 3	0001-0001.604	R-METALL	2K87 1% 0207	TK 50 56	1	DRALORIC			L
8R 4	0001-0006.751	R-KOHLE	68R 5% 0207	56	1	DRALORIC			L

Bei Bestellung Sach-Nr. angeben!
When ordering, quote Item No.

S C H A L T T E I L L I S T E / P A R T - L I S T

SERIE M 0955-8401.000 SPM-15 955/01 AUSF:

TEILE-NR PART NO	SACH-NR ITEM NO	BENENNUNG DESIGNATION	BEZEICHNUNG 1 MARKING 1			BEZEICHNUNG 2 MARKING 2		MG QU	WERKNORM REF.DESIG	BEMERKUNG NOTE	SERIE AF VERSION	C
8P 5	0001-0006.751	R-KOHLE	68R	5%	0207		56	1	DRALORIC			L
8R 6	0001-0000.980	R-METALL	499R	1%	0207	TK 50	56	1	DRALORIC			L
8R 7	0001-0003.563	R-METALL	124R	1%	0207	TK 50	56	1	DRALORIC			L
8R 8	0001-0001.112	R-METALL	732R	1%	0207	TK 50	56	1	DRALORIC			L
8R 9	0001-0000.980	R-METALL	499R	1%	0207	TK 50	56	1	DRALORIC			L
8R 10	0001-0006.751	R-KOHLE	68R	5%	0207		56	1	DRALORIC			L
8R 11	0001-0001.714	R-METALL	3K74	1%	0207	TK 50	56	1	DRALORIC			L
8R 12	0001-0001.604	R-METALL	2K87	1%	0207	TK 50	56	1	DRALORIC			L
8R 13	0001-0001.154	R-METALL	825R	1%	0207	TK 50	56	1	DRALORIC			L
8R 14	0001-0001.358	R-METALL	1K5	1%	0207	TK 50	56	1	DRALORIC			L
8R 15	0001-0001.921	R-METALL	6K04	1%	0207	TK 50	56	1	DRALORIC			L
8R 16	0001-0002.085	R-METALL	8K87	1%	0207	TK 50	56	1	DRALORIC			L
8R 17	0001-0006.751	R-KOHLE	68R	5%	0207		56	1	DRALORIC			L
8R 18	0001-0003.563	R-METALL	124R	1%	0207	TK 50	56	1	DRALORIC			L
8R 19	0001-0000.621	R-METALL	158R	1%	0207	TK 50	56	1	DRALORIC			L
8R 21	0001-0006.735	R-KOHLE	56R	5%	0207		56	1	DRALORIC			L
8R 22	0001-0006.667	R-KOHLE	15R	5%	0207		56	1	DRALORIC			L
8R 23	0001-0003.563	R-METALL	124R	1%	0207	TK 50	56	1	DRALORIC			L
8R 24	0001-0001.921	R-METALL	6K04	1%	0207	TK 50	56	1	DRALORIC			L
8R 25	0001-0002.085	R-METALL	8K87	1%	0207	TK 50	56	1	DRALORIC			L
8R 26	0001-0006.683	R-KOHLE	22R	5%	0207		56	1	DRALORIC			L
8R 30	0001-0062.300	R-METALL	24R3	1%	0207	TK 50	56	1	DRALORIC			L
8R 31	0001-0001.497	R-METALL	2K21	1%	0207	TK 50	56	1	DRALORIC			L
8R 32	0001-0001.578	R-METALL	2K67	1%	0207	TK 50	56	1	DRALORIC			L
8R 33	0001-0001.549	R-METALL	2K49	1%	0207	TK 50	56	1	DRALORIC			L
8R 34	0001-0001.510	R-METALL	2K32	1%	0207	TK 50	56	1	DRALORIC			L
8R 35	0000-7608.900	R-METALL	274R	1%	0204	TK 50	56	1	018/04/01			L
8R 36	0000-7608.845	R-METALL	22R1	1%	0204	TK 50	56	1	018/04/01			L
8R 38	0000-7585.544	R-METALL	1K	1%	0204	TK 50	56	1	018/04/01			L
8R 39	0001-0000.317	R-METALL	49R9	1%	0207	TK 50	56	1	DRALORIC			L
8R 40	0000-7585.544	R-METALL	1K	1%	0204	TK 50	56	1	018/04/01			L
8R 41	0001-0000.317	R-METALL	49R9	1%	0207	TK 50	56	1	DRALORIC			L
8R 42	0000-7608.845	R-METALL	22R1	1%	0204	TK 50	56	1	018/04/01			L
8R 43	0000-7608.845	R-METALL	22R1	1%	0204	TK 50	56	1	018/04/01			L
8R 45	0000-7593.109	R-METALL	68R1	1%	0204	TK 50	56	1	018/04/01			L
8R 46	0001-0000.676	R-METALL	200R	1%	0207	TK 50	56	1	DRALORIC			L
8R 47	0001-0000.841	R-METALL	340R	1%	0207	TK 50	56	1	DRALORIC			L
8R 48	0001-0000.731	R-METALL	243R	1%	0207	TK 50	56	1	DRALORIC			L
8R 49	0001-0000.676	R-METALL	200R	1%	0207	TK 50	56	1	DRALORIC			L
8R 50	0000-7593.109	R-METALL	68R1	1%	0204	TK 50	56	1	018/04/01			L
8R 52	0001-0003.563	R-METALL	124R	1%	0207	TK 50	56	1	DRALORIC			L
8R 53	0000-7608.845	R-METALL	22R1	1%	0204	TK 50	56	1	018/04/01			L
8R 54	0001-0003.563	R-METALL	124R	1%	0207	TK 50	56	1	DRALORIC			L
8R 55	0001-0000.919	R-METALL	412R	1%	0207	TK 50	56	1	DRALORIC			L
8R 56	0001-0000.511	R-METALL	90R9	1%	0207	TK 50	56	1	DRALORIC			L
8R 57	0000-7593.109	R-METALL	68R1	1%	0204	TK 50	56	1	018/04/01			L
8R 58	0000-7608.913	R-METALL	392R	1%	0204	TK 50	56	1	018/04/01			L
8R 59	0001-0003.576	R-METALL	267R	1%	0207	TK 50	56	1	DRALORIC			L
8R 60	0000-7519.471	R-METALL	100R	1%	0204	TK 50	56	1	018/04/01			L
8R 61	0001-0001.895	R-METALL	5K62	1%	0207	TK 50	56	1	DRALORIC			L
8R 62	0001-0002.179	R-METALL	11K	1%	0207	TK 50	56	1	DRALORIC			L

Bei Bestellung Sach-Nr. angeben!
When ordering, quote Item No.

SERIE M 0955-8401.000 SPM-15 955/01 AUSF:

TEILE-NR PART NO	SACH-NR ITEM NO	BENENNUNG DESIGNATION	BEZEICHNUNG 1 MARKING 1			BEZEICHNUNG 2 MARKING 2		MG QU	WERKNORM REF.DESIG	BEMERKUNG NOTE	SERIE AF VERSION	C
8R 63	0001-0000.977	R-METALL	487R	1%	0207	TF 50	56	1	DRALORIC			L
8T 1	0001-0016.903	TRANS SI NPN	BFY 90		A TO 72			1	SIEMENS			L
8T 2	0001-0016.903	TRANS SI NPN	BFY 90		A TO 72			1	SIEMENS			L
8UE 1	0955-7728.001	UEBERTRAGER						1				A
8UE 2	0829-7733.001	UEBERTRAGER						1				A
9BU 1	0000-1637.074	WINKELBU. 75 OHM KPL						1				L
9BU 2	0000-1637.074	WINKELBU. 75 OHM KPL						1				L
9C 1	0000-7559.745	C-KF KS	6N49	0%5	160V	B31521	56	1	SIEMENS		M-..	L
9C 2	0000-7559.729	C-KF KS	3N79	0%5	160V	B31521	56	1	SIEMENS		M-..	L
9C 3	0000-7551.565	C-KF KS	10N9	0%5	160V	B31521	56	1	SIEMENS		M-..	L
9C 4	0000-7563.618	C-KF KS	6N57	0%5	160V	B31521	56	1	SIEMENS		M-..	L
9C 5	0000-7562.376	C-KF KS	2N8	0%5	160V	B31521	56	1	SIEMENS		M-..	L
9C 6	0000-7561.377	C-KF KS	3N24	0%5	160V	B31521	56	1	SIEMENS		M-..	L
9C 7	0000-7563.621	C-KF KS	4N22	0%5	160V	B31521	56	1	SIEMENS		M-..	L
9C 8	0000-7559.761	C-KF KS	9N65	0%5	160V	B31521	56	1	SIEMENS		M-..	L
9C 9	0000-7563.634	C-KF KS	3N61	0%5	160V	B31521	56	1	SIEMENS		M-..	L
9C 10	0000-7563.647	C-KF KS	8N66	0%5	160V	B31521	56	1	SIEMENS		M-..	L
9C 11	0000-7563.650	C-KF KS	9N31	0%5	160V	B31521	56	1	SIEMENS		M-..	L
9C 12	0000-7559.936	C-KF KS	8N16	0%5	160V	B31521	56	1	SIEMENS		M-..	L
9C 13	0000-7563.663	C-KF KS	2N1	0%5	160V	B31521	56	1	SIEMENS		M-..	L
9C 14	0000-7563.676	C-KF KS	4N99	0%5	160V	B31521	56	1	SIEMENS		M-..	L
9C 15	0000-7562.716	C-KF KS	1N87	0%5	160V	B31521	56	1	SIEMENS		M-..	L
9C 16	0000-7560.226	C-KF KS	13N2	0%5	160V	B31521	56	1	SIEMENS		M-..	L
9C 17	0000-7563.689	C-KF KS	18N9	0%5	160V	B31521	56	1	SIEMENS		M-..	L
9C 18	0000-7563.692	C-KF KS	2N43	0%5	160V	B31521	56	1	SIEMENS		M-..	L
9C 20	0001-0004.821	C-KERAMIK EDPT	22N	20/ 80	40V	R10000 2	56	1	110/02/10		M-..	L
9C 21	0001-0004.821	C-KERAMIK EDPT	22N	20/ 80	40V	R10000 2	56	1	110/02/10		M-..	L
9C 22	0001-0004.821	C-KERAMIK EDPT	22N	20/ 80	40V	R10000 2	56	1	110/02/10		M-..	L
9C 23	0001-0004.821	C-KERAMIK EDPT	22N	20/ 80	40V	R10000 2	56	1	110/02/10		M-..	L
9C 25	0000-7563.702	C-KF KS	1N1	0%5	160V	B31521	56	1	SIEMENS		M-..	L
9C 26	0000-7563.715	C-KF KS	25N5	0%5	160V	B31521	56	1	SIEMENS		M-..	L
9C 27	0001-0040.966	ELKO-TA SINT FEST	22U	20%	16V	ETR-3	56	1	110/05/61		M-..	L
9C 28	0001-0010.378	C-KF MKT	100N	20%	100V	MKT1822	56	1	110/03/07		M-..	L
9C 29	0001-0010.378	C-KF MKT	100N	20%	100V	MKT1822	56	1	110/03/07		M-..	L
9C 30	0001-0004.821	C-KERAMIK EDPT	22N	20/ 80	40V	R10000 2	56	1	110/02/10		M-..	L
9C 32	0001-0040.966	ELKO-TA SINT FEST	22U	20%	16V	ETR-3	56	1	110/05/61		M-..	L
9C 33	0001-0004.384	C-KERAMIK EDPT	47P	2%	63V	NP 0 1B	56	1	110/02/09		M-..	L
9C 34	0001-0040.966	ELKO-TA SINT FEST	22U	20%	16V	ETR-3	56	1	110/05/61		M-..	L
9C 35	0001-0010.417	C-KF MKT	220N	20%	100V	MKT1822	56	1	110/03/07		M-..	L
9C 36	0001-0010.378	C-KF MKT	100N	20%	100V	MKT1822	56	1	110/03/07		M-..	L
9C 37	0001-0041.790	ELKO-AL	100U	10/ 50	16V	B41588	56	1	110/05/40		M-..	L
9C 38	0855-0025.003	C-KERAMIK DDMZ	4N7	20/ 80	63V	D 6000 2	04	1				L
9C 39	0855-0022.006	C-KERAMIK DDMZ	4N7	20/ 80	63V	D 6000 2	04	1				L
9C 40	0855-0022.006	C-KERAMIK DDMZ	4N7	20/ 80	63V	D 6000 2	04	1				L
9C 41	0855-0022.006	C-KERAMIK DDMZ	4N7	20/ 80	63V	D 6000 2	04	1				L
9C 42	0855-0025.003	C-KERAMIK DDMZ	4N7	20/ 80	63V	D 6000 2	04	1				L

SERIE M 0955-8401.000 SPM-15 955/01 AUSF:

TEILE-NR PART NO	SACH-NR ITEM NO	BENENNUNG DESIGNATION	BEZEICHNUNG 1 MARKING 1	BEZEICHNUNG 2 MARKING 2	MG QU	WERKNORM REF.DESIG	BEMERKUNG NOTE	SERIE AF VERSION	C
10C 60	0001-0041.059	ELKO-TA SINT FEST	47U 20% 6V3	ETR-3 56	1	110/05/61		E-..	L
10C 61	0001-0041.114	ELKO-TA SINT FEST	68U 20% 16V	ETR-4 56	1	110/05/61		E-..	L
10C 62	0001-0041.059	ELKO-TA SINT FEST	47U 20% 6V3	ETR-3 56	1	110/05/61		E-..	L
10C 63	0001-0004.821	C-KERAMIK EDPT	22N 20/ 80 40V	R10000 2 56	1	110/02/10		E-..	L
10C 64	0001-0041.185	ELKO-TA SINT FEST	150U 20% 6V3	ETR-4 56	1	110/05/61		E-..	L
10C 65	0001-0004.737	C-KERAMIK EDPT	2N2 10% 63V	R 2000 2 56	1	110/02/10		E-..	L
10GL 1	0001-0018.231	DIODE SI SCHOTTKY-	HP 5082-2811 DO 35	= 1N5713	1	HPA			L
10GL 2	0001-0018.231	DIODE SI SCHOTTKY-	HP 5082-2811 DO 35	= 1N5713	1	HPA			L
10GL 3	0001-0018.231	DIODE SI SCHOTTKY-	HP 5082-2811 DO 35	= 1N5713	1	HPA			L
10GL 4	0001-0018.231	DIODE SI SCHOTTKY-	HP 5082-2811 DO 35	= 1N5713	1	HPA			L
10GL 5	0000-7531.860	DIODE SI REFERENZ	1 N 4572 A DO 7		1	140/03/03			L
10GL 6	0001-0018.493	DIODE SI	1 N 4448 DO 35		1	ITT			L
10GL 7	0000-7531.860	DIODE SI REFERENZ	1 N 4572 A DO 7		1	140/03/03			L
10GL 8	0001-0018.493	DIODE SI	1 N 4448 DO 35		1	ITT			L
10GL 9	0001-0018.493	DIODE SI	1 N 4448 DO 35		1	ITT			L
10GL 10	0001-0018.493	DIODE SI	1 N 4448 DO 35		1	ITT			L
10GL 11	0001-0018.493	DIODE SI	1 N 4448 DO 35		1	ITT			L
10GL 13	0001-0018.493	DIODE SI	1 N 4448 DO 35		1	ITT			L
10GL 14	0001-0018.493	DIODE SI	1 N 4448 DO 35		1	ITT			L
10IC 1	0001-0067.431	IC-CMOS	4047BE DIP 14	MOS	1	RCA			L
10IC 2	0001-0067.554	IC-CMOS	4066BCP DIP 14	MOS	1	MOTOROLA			L
10IC 3	0001-0070.761	IC-CMOS	4538BCP DIP 16	MOS	1	MOTOROLA			L
10IC 4	0001-0072.390	IC-LOCMOS	40098BP DIP 16	858521	1	VALVO			L
10IC 5	0001-0070.761	IC-CMOS	4538BCP DIP 16	MOS	1	MOTOROLA			L
10IC 7	0000-7556.777	IC-OP.-VERST.	UA714HC TO 99		1	FSC			L
10L 1	0000-7556.052	L-FEST	1U 10% 1025-20	25 25 230 1R1 385MA	1	117/01/03		B-..	L
10L 2	0000-7556.007	L-FEST	390N 10% 1025-10	30 25 365 0R3 700MA	1	117/01/03			L
10L 3	0829-7835.006	SPULE			1				A
10L 4	0829-7835.006	SPULE			1				A
10P 1	0000-7571.710	R-TRIM CERMET SQUARE	200R 10% 0W2 20	TK 100 T93YA 56	1	017/04/06		E-..	L
10P 2	0000-7571.707	R-TRIM CERMET SQUARE	100R 10% 0W2 20	TK 100 T93YA 56	1	017/04/06			L
10R 1	0001-0006.968	R-KOHLE	2K7 5% 0207	56	1	DRALORIC			L
10R 2	0001-0007.190	R-KOHLE	220K 5% 0207	56	1	018/03/01			L
10R 3	0001-0006.641	R-KOHLE	10R 5% 0207	56	1	DRALORIC			L
10R 4	0001-0007.006	R-KOHLE	5K6 5% 0207	56	1	DRALORIC			L
10R 5	0001-0006.955	R-KOHLE	2K2 5% 0207	56	1	DRALORIC			L
10P 6	0001-0006.971	R-KOHLE	3K3 5% 0207	56	1	DRALORIC			L
10R 7	0001-0006.816	R-KOHLE	150R 5% 0207	56	1	DRALORIC			L
10R 8	0001-0006.913	R-KOHLE	1K 5% 0207	56	1	DRALORIC			L
10R 9	0001-0006.913	R-KOHLE	1K 5% 0207	56	1	DRALORIC			L
10R 10	0001-0006.751	R-KOHLE	68R 5% 0207	56	1	DRALORIC			L
10R 11	0001-0006.751	R-KOHLE	68R 5% 0207	56	1	DRALORIC			L
10R 12	0001-0006.751	R-KOHLE	68R 5% 0207	56	1	DRALORIC			L
10R 13	0001-0006.845	R-KOHLE	270R 5% 0207	56	1	DRALORIC			L
10R 14	0001-0006.829	R-KOHLE	180R 5% 0207	56	1	DRALORIC			L
10P 15	0001-0006.890	R-KOHLE	680R 5% 0207	56	1	DRALORIC			L

Bei Bestellung Sach-Nr. angeben!
When ordering, quote Item No.

SERIE M 0955-8401-000 SPM-15 955/01 AUSF:

TEILE-NR PART NO	SACH-NR ITEM NO	BENENNUNG DESIGNATION	BEZEICHNUNG 1 MARKING 1			BEZEICHNUNG 2 MARKING 2		MG GU	WERKNORM PEF.DESIG	BEMERKUNG NOTE	SERIE AF VERSION	C
10R 16	0001-0006.890	R-KOHLE	680R	5%	0207		56	1	DRALORIC			L
10R 17	0001-0007.132	R-KOHLE	68K	5%	0207		56	1	018/03/01			L
10R 18	0001-0006.971	R-KOHLE	3K3	5%	0207		56	1	DRALORIC			L
10R 19	0001-0006.751	R-KOHLE	68R	5%	0207		56	1	DRALORIC			L
10R 20	0001-0007.080	R-KOHLE	27K	5%	0207		56	1	018/03/01			L
10R 21	0001-0006.955	R-KOHLE	2K2	5%	0207		56	1	DRALORIC			L
10R 22	0001-0006.751	R-KOHLE	68R	5%	0207		56	1	DRALORIC			L
10R 24	0001-0006.751	R-KOHLE	68R	5%	0207		56	1	DRALORIC			L
10R 25	0001-0006.829	R-KOHLE	180R	5%	0207		56	1	DRALORIC			L
10R 26	0001-0006.751	R-KOHLE	68R	5%	0207		56	1	DRALORIC			L
10R 27	0001-0006.913	R-KOHLE	1K	5%	0207		56	1	DRALORIC			L
10R 28	0001-0007.006	R-KOHLE	5K6	5%	0207		56	1	DRALORIC			L
10R 29	0001-0006.926	R-KOHLE	1K2	5%	0207		56	1	DRALORIC			L
10R 30	0001-0006.913	R-KOHLE	1K	5%	0207		56	1	DRALORIC			L
10R 31	0001-0007.006	R-KOHLE	5K6	5%	0207		56	1	DRALORIC			L
10R 32	0001-0000.456	R-METALL	75R	1%	0207	TK 50	56	1	DRALORIC			L
10R 33	0001-0000.333	R-METALL	53R6	1%	0207	TK 50	56	1	DRALORIC			L
10R 34	0001-0000.540	R-METALL	107R	1%	0207	TK 50	56	1	DRALORIC			L
10R 35	0001-0000.605	R-METALL	143R	1%	0207	TK 50	56	1	DRALORIC			L
10R 36	0001-0000.605	R-METALL	143R	1%	0207	TK 50	56	1	DRALORIC			L
10R 37	0001-0000.210	R-METALL	28R	1%	0207	TK 50	56	1	DRALORIC			L
10R 38	0001-0002.263	R-METALL	14K	1%	0207	TK 50	56	1	DRALORIC		E-..	L
10R 39	0001-0001.620	R-METALL	3K01	1%	0207	TK 50	56	1	DRALORIC		E-..	L
10R 40	0001-0001.620	R-METALL	3K01	1%	0207	TK 50	56	1	DRALORIC		E-..	L
10R 44	0001-0001.659	R-METALL	3K24	1%	0207	TK 50	56	1	DRALORIC		E-..	L
10R 45	0001-0002.360	R-METALL	18K2	1%	0207	TK 50	56	1	DRALORIC		E-..	L
10R 46	0001-0002.263	R-METALL	14K	1%	0207	TK 50	56	1	DRALORIC		E-..	L
10R 47	0001-0000.663	R-METALL	182R	1%	0207	TK 50	56	1	DRALORIC		E-..	L
10R 48	0001-0000.812	R-METALL	316R	1%	0207	TK 50	56	1	DRALORIC			L
10R 49	0001-0006.722	R-KOHLE	47R	5%	0207		56	1	DRALORIC			L
10R 50	0001-0001.921	R-METALL	6K04	1%	0207	TK 50	56	1	DRALORIC			L
10R 51	0001-0006.942	R-KOHLE	1K8	5%	0207		56	1	DRALORIC		E-..	L
10R 52	0001-0006.913	R-KOHLE	1K	5%	0207		56	1	DRALORIC			L
10R 53	0001-0006.913	R-KOHLE	1K	5%	0207		56	1	DRALORIC			L
10R 54	0001-0006.997	R-KOHLE	4K7	5%	0207		56	1	DRALORIC			L
10R 55	0001-0006.942	R-KOHLE	1K8	5%	0207		56	1	DRALORIC			L
10R 56	0001-0006.751	R-KOHLE	68R	5%	0207		56	1	DRALORIC			L
10R 57	0001-0006.777	R-KOHLE	82R	5%	0207		56	1	DRALORIC			L
10R 58	0001-0006.777	R-KOHLE	82R	5%	0207		56	1	DRALORIC			L
10R 59	0001-0006.751	R-KOHLE	68R	5%	0207		56	1	DRALORIC			L
10R 60	0001-0006.751	R-KOHLE	68R	5%	0207		56	1	DRALORIC			L
10R 61	0001-0006.861	R-KOHLE	390R	5%	0207		56	1	DRALORIC			L
10R 62	0001-0006.955	R-KOHLE	2K2	5%	0207		56	1	DRALORIC			L
10R 63	0001-0006.751	R-KOHLE	68R	5%	0207		56	1	DRALORIC			L
10R 64	0001-0006.971	R-KOHLE	3K3	5%	0207		56	1	DRALORIC			L
10R 65	0001-0006.858	R-KOHLE	330R	5%	0207		56	1	DRALORIC			L
10R 66	0001-0007.132	R-KOHLE	68K	5%	0207		56	1	DRALORIC			L
10R 67	0001-0007.080	R-KOHLE	27K	5%	0207		56	1	018/03/01			L
10R 69	0001-0006.751	R-KOHLE	68R	5%	0207		56	1	018/03/01			L
10R 70	0001-0003.660	R-METALL	187R	1%	0207	TK 50	56	1	DRALORIC			L
10R 71	0001-0007.019	R-KOHLE	6K8	5%	0207		56	1	DRALORIC		E-..	L

Bei Bestellung Sach-Nr. angeben!
When ordering, quote Item No.

SERIE M 0955-8401.000 SPM-15 955/01 AUSF:

TEILE-NR PART NO	SACH-NR ITEM NO	BENENNUNG DESIGNATION	BEZEICHNUNG 1 MARKING 1	BEZEICHNUNG 2 MARKING 2	MG QU	WERKNORM REF.DESIG	BEMERKUNG NOTE	SERIE AF VERSION	C
10R 72	0001-0006.913	R-KOHLE	1K 5% 0207	56	1	DRALORIC			L
10R 73	0001-0006.913	R-KOHLE	1K 5% 0207	56	1	DRALORIC			L
10R 74	0001-0007.006	R-KOHLE	5K6 5% 0207	56	1	DRALORIC			L
10R 75	0001-0006.751	R-KOHLE	68R 5% 0207	56	1	DRALORIC			L
10R 76	0001-0006.751	R-KOHLE	68R 5% 0207	56	1	DRALORIC			L
10R 77	0001-0000.980	R-METALL	499R 1% 0207	TK 50 56	1	DRALORIC			L
10R 78	0001-0000.731	R-METALL	243R 1% 0207	TK 50 56	1	DRALORIC		E-..	L
10R 79	0001-0006.641	R-KOHLE	10R 5% 0207	56	1	DRALORIC			L
10R 80	0001-0006.968	R-KOHLE	2K7 5% 0207	56	1	DRALORIC			L
10R 81	0001-0007.190	R-KOHLE	220K 5% 0207	56	1	DRALORIC			L
10R 83	0001-0018.561	R-KOHLE	3R9 5% 0207	56	1	018/03/01			L
10R 84	0000-7644.838	R-METALL	13K7 1% 0204	TK 50 56	1	DRALORIC			L
10R 85	0000-7608.874	R-METALL	47R5 1% 0204	TK 50 56	1	018/04/01		K-..	L
10R 86	0001-0006.984	R-KOHLE	3K9 5% 0207	56	1	018/04/01		K-..	L
10R 87	0001-0007.239	R-KOHLE	470K 5% 0207	56	1	DRALORIC			L
10R 88	0000-7547.799	R-MODUL	5X100K 5% 0W1	TK250 EXB-F10V-104J	1	018/03/01			L
10R 89	0001-0001.743	R-METALL	4K02 1% 0207	TK 50 56	1	018/06/01			L
10R 90	0001-0006.751	R-KOHLE	68R 5% 0207	56	1	DRALORIC		E-..	L
10R 100	0001-0006.751	R-KOHLE	68R 5% 0207	56	1	DRALORIC			L
10R 102	0001-0007.035	R-KOHLE	10K 5% 0207	56	1	DRALORIC			L
10R 103	0001-0007.035	R-KOHLE	10K 5% 0207	56	1	DRALORIC			L
10R 104	0001-0007.190	R-KOHLE	220K 5% 0207	56	1	DRALORIC			L
10R 106	0001-0007.158	R-KOHLE	100K 5% 0207	56	1	018/03/01			L
10R 107	0001-0007.158	R-KOHLE	100K 5% 0207	56	1	018/03/01			L
10R 118	0001-0000.430	R-METALL	69R8 1% 0207	TK 50 56	1	018/03/01			L
10R 119	0001-0072.248	R-NTC	500R 10% 3000 0W1	K11 Q63011-K501-K	1	DRALORIC		E-..	L
10R 120	0001-0006.751	R-KOHLE	68R 5% 0207	56	1	SIEMENS			L
10R 121	0001-0001.002	R-METALL	549R 1% 0207	TK 50 56	1	DRALORIC		E-..	L
10R 122	0001-0006.751	R-KOHLE	68R 5% 0207	56	1	DRALORIC		E-..	L
10R 123	0001-0000.511	R-METALL	90R9 1% 0207	TK 50 56	1	DRALORIC		E-..	L
10R 124	0001-0001.002	R-METALL	549R 1% 0207	TK 50 56	1	DRALORIC		E-..	L
10R 125	0001-0000.993	R-METALL	523R 1% 0207	TK 50 56	1	DRALORIC		E-..	L
10R 126	0001-0006.751	R-KOHLE	68R 5% 0207	56	1	DRALORIC		E-..	L
10R 127	0001-0006.683	R-KOHLE	22R 5% 0207	56	1	DRALORIC		E-..	L
10R 128	0001-0003.686	R-METALL	453R 1% 0207	TK 50 56	1	DRALORIC		E-..	L
10R 129	0001-0000.537	R-METALL	100R 1% 0207	TK 50 56	1	DRALORIC		E-..	L
10R 130	0001-0003.958	R-METALL	162R 1% 0207	TK 50 56	1	DRALORIC		E-..	L
10R 131	0001-0003.738	R-METALL	118R 1% 0207	TK 50 56	1	DRALORIC		E-..	L
10R 132	0001-0000.676	R-METALL	200R 1% 0207	TK 50 56	1	DRALORIC		E-..	L
10REL 1	0000-7619.326	RELAIS GEPOLT BISTAB	001 AU 12V 1K5 HD	RSL12V	1	SDS			L
10REL 2	0000-7588.813	RELAIS GEPOLT BISTAB	220 AU 12V 1K5 HD	S2-L-12V	1	SDS			L
10S 1	0000-1832.015	S-DUAL-IN-LINE	1 100 SN HAKEN-	GEK.: C42315-A1347-A124	1	SIEMENS			L
10S 2	0000-1832.015	S-DUAL-IN-LINE	1 100 SN HAKEN-	GEK.: C42315-A1347-A124	1	SIEMENS			L
10ST 1	0855-0006.006	STECKER	EN 855 A 1 KPL		1				L
10ST 2	0855-0007.005	STECKER	EN 855 A 2 KPL		1				L
10T 1	0001-0016.518	TRANS SI NPN	BCY 59 X (D) A TO 18		1	TFK			L
10T 2	0001-0016.903	TRANS SI NPN	BFY 90 A TO 72		1	SIEMENS			L

Bei Bestellung Sach-Nr. angeben!
When ordering, quote Item No.

SERIE M 0955-8401.000 SPM-15 955/01 AUSF:

TEILE-NR PART NO	SACH-NR ITEM NO	BENENNUNG DESIGNATION	BEZEICHNUNG 1 MARKING 1	BEZEICHNUNG 2 MARKING 2	MG QU	WERKNORM REF.DESIG	BEMERKUNG NOTE	SERIE AF VERSION	C
10T 3	0001-0016.903	TRANS SI NPN	BFY 90 A TO 72		1	SIEMENS			L
10T 4	0001-0016.903	TRANS SI NPN	BFY 90 A TO 72		1	SIEMENS			L
10T 5	0001-0016.903	TRANS SI NPN	BFY 90 A TO 72		1	SIEMENS			L
10T 6	0001-0016.903	TRANS SI NPN	BFY 90 A TO 72		1	SIEMENS			L
10T 7	0001-0016.903	TRANS SI NPN	BFY 90 A TO 72		1	SIEMENS			L
10T 8	0001-0016.903	TRANS SI NPN	BFY 90 A TO 72		1	SIEMENS			L
10T 11	0000-7536.153	TRANS SI PNP	2 N 4209 A TO 52		1	FSC		B-..	L
10T 12	0000-7536.153	TRANS SI PNP	2 N 4209 A TO 52		1	FSC		B-..	L
10T 13	0001-0016.550	TRANS SI PNP	BCY 78 X (D) A TO 18		1	MOT			L
10T 14	0001-0016.903	TRANS SI NPN	BFY 90 A TO 72		1	SIEMENS			L
10T 15	0001-0016.903	TRANS SI NPN	BFY 90 A TO 72		1	SIEMENS			L
10T 16	0001-0016.903	TRANS SI NPN	BFY 90 A TO 72		1	SIEMENS			L
10T 17	0001-0016.903	TRANS SI NPN	BFY 90 A TO 72		1	SIEMENS			L
10T 18	0001-0016.518	TRANS SI NPN	BCY 59 X (D) A TO 18		1	TFK			L
10T 20	0001-0016.903	TRANS SI NPN	BFY 90 A TO 72		1	SIEMENS		E-..	L
10T 21	0000-7536.153	TRANS SI PNP	2 N 4209 A TO 52		1	FSC		E-..	L
10T 22	0001-0016.903	TRANS SI NPN	BFY 90 A TO 72		1	SIEMENS		E-..	L
10UE 1	0955-7729.000	UEBERTRAGER			1				A
10UE 2	0955-7730.002	UEBERTRAGER			1				A
11BU 1	0000-7598.696	HF-BUCHSE	BNC 50 M D 5,0	CR EL 26,7 551K504-106A4	1	ROSENBERG			L
11C 1	0001-0004.698	C-KERAMIK EDPT	1N 10% 63V	R 2000 2 56	1	110/02/10			L
11C 2	0001-0004.821	C-KERAMIK EDPT	22N 20/ 80 40V	R10000 2 56	1	110/02/10			L
11C 3	0001-0004.779	C-KERAMIK EDPT	3N3 10% 63V	R 2000 2 56	1	110/02/10			L
11C 5	0001-0004.148	C-KERAMIK EDPT	8P2 0P25 63V	NP 0 1B 56	1	110/02/09			L
11C 6	0001-0069.468	C-TRIM KER SCHEIBE	7P - 35P N1500 0,5	OR 301427603 21	1	111/01/06			L
11C 7	0001-0004.203	C-KERAMIK EDPT	12P 2% 63V	NP 0 1B 56	1	110/02/09			L
11C 8	0001-0069.468	C-TRIM KER SCHEIBE	7P - 35P N1500 0,5	OR 301427603 21	1	111/01/06			L
11C 9	0001-0004.148	C-KERAMIK EDPT	8P2 0P25 63V	NP 0 1B 56	1	110/02/09			L
11C 11	0001-0004.737	C-KERAMIK EDPT	2N2 10% 63V	R 2000 2 56	1	110/02/10			L
11C 12	0001-0004.821	C-KERAMIK EDPT	22N 20/ 80 40V	R10000 2 56	1	110/02/10			L
11C 15	0001-0040.966	ELKO-TA SINT FEST	22U 20% 16V	ETR-3 56	1	110/05/61			L
11C 16	0001-0004.821	C-KERAMIK EDPT	22N 20/ 80 40V	R10000 2 56	1	110/02/10			L
11C 17	0001-0004.821	C-KERAMIK EDPT	22N 20/ 80 40V	R10000 2 56	1	110/02/10			L
11C 18	0001-0004.821	C-KERAMIK EDPT	22N 20/ 80 40V	R10000 2 56	1	110/02/10			L
11C 19	0001-0004.818	C-KERAMIK EDPT	10N 20/100 40V	R10000 2 56	1	110/02/10			L
11C 20	0001-0004.698	C-KERAMIK EDPT	1N 10% 63V	R 2000 2 56	1	110/02/10			L
11C 21	0001-0004.698	C-KERAMIK EDPT	1N 10% 63V	R 2000 2 56	1	110/02/10			L
11L 1	0000-7555.998	L-FEST	330N 10% 1025-08	30 25 410 OR22 815MA	1	117/01/03			L
11L 2	0000-7555.998	L-FEST	330N 10% 1025-08	30 25 410 OR22 815MA	1	117/01/03			L
11R 1	0001-0007.048	R-KOHLE	12K 5% 0207	56	1	DRALORIC			L
11R 2	0001-0007.035	R-KOHLE	10K 5% 0207	56	1	DRALORIC			L
11R 3	0001-0006.751	R-KOHLE	68R 5% 0207	56	1	DRALORIC			L
11R 4	0001-0006.890	R-KOHLE	680R 5% 0207	56	1	DRALORIC			L
11R 5	0001-0006.939	R-KOHLE	1K5 5% 0207	56	1	DRALORIC			L
11R 6	0001-0006.803	R-KOHLE	120R 5% 0207	56	1	DRALORIC			L

Bei Bestellung Sach-Nr. angeben!
When ordering, quote Item No.

SERIE M 0955-8401.000 SPM-15 955/01 AUSF:

TEILE-NR PART NO	SACH-NR ITEM NO	BENENNUNG DESIGNATION	BEZEICHNUNG 1 MARKING 1	BEZEICHNUNG 2 MARKING 2	MG QU	WERKNORM REF.DESIG	BEMERKUNG NOTE	SERIE AF VERSION	C
11R 7	0001-0006.722	R-KOHLE	47R 5% 0207	56	1	DRALORIC			L
11R 10	0001-0006.900	R-KOHLE	820R 5% 0207	56	1	DRALORIC			L
11R 11	0001-0007.064	R-KOHLE	18K 5% 0207	56	1	DRALORIC			L
11R 12	0001-0007.051	R-KOHLE	15K 5% 0207	56	1	DRALORIC			L
11R 13	0001-0006.751	R-KOHLE	68R 5% 0207	56	1	DRALORIC			L
11R 14	0001-0006.861	R-KOHLE	390R 5% 0207	56	1	DRALORIC			L
11R 15	0001-0006.858	R-KOHLE	330R 5% 0207	56	1	DRALORIC			L
11R 16	0001-0006.926	R-KOHLE	1K2 5% 0207	56	1	DRALORIC			L
11R 20	0001-0006.751	R-KOHLE	68R 5% 0207	56	1	DRALORIC			L
11R 21	0001-0006.971	R-KOHLE	3K3 5% 0207	56	1	DRALORIC			L
11R 22	0001-0006.751	R-KOHLE	68R 5% 0207	56	1	DRALORIC			L
11R 23	0001-0006.751	R-KOHLE	68R 5% 0207	56	1	DRALORIC			L
11R 25	0001-0006.722	R-KOHLE	47R 5% 0207	56	1	DRALORIC			L
11R 26	0001-0006.858	R-KOHLE	330R 5% 0207	56	1	DRALORIC			L
11R 27	0001-0006.722	R-KOHLE	47R 5% 0207	56	1	DRALORIC			L
11R 28	0001-0006.887	R-KOHLE	560R 5% 0207	56	1	DRALORIC			L
11R 30	0001-0006.706	R-KOHLE	33R 5% 0207	56	1	DRALORIC			L
11R 31	0001-0006.706	R-KOHLE	33R 5% 0207	56	1	DRALORIC			L
11R 32	0001-0006.751	R-KOHLE	68R 5% 0207	56	1	DRALORIC			L
11R 33	0001-0006.751	R-KOHLE	68R 5% 0207	56	1	DRALORIC			L
11T 1	0001-0016.903	TRANS SI NPN	BFY 90 A TO 72		1	SIEMENS			L
11T 2	0001-0016.903	TRANS SI NPN	BFY 90 A TO 72		1	SIEMENS			L
11T 3	0001-0016.903	TRANS SI NPN	BFY 90 A TO 72		1	SIEMENS			L
11T 4	0001-0016.903	TRANS SI NPN	BFY 90 A TO 72		1	SIEMENS			L
11T 5	0001-0016.903	TRANS SI NPN	BFY 90 A TO 72		1	SIEMENS			L
12BU 1	0000-1637.074	WINKELBU. 75 OHM KPL			1				L
12BU 2	0000-1637.074	WINKELBU. 75 OHM KPL			1				L
12BU 3	0000-1637.074	WINKELBU. 75 OHM KPL			1				L
12BU 4	0000-1637.074	WINKELBU. 75 OHM KPL			1				L
12C 1	0001-0004.737	C-KERAMIK EDPT	2N2 10% 63V	R 2000 2 56	1	110/02/10			L
12C 2	0001-0004.821	C-KERAMIK EDPT	22N 20/ 80 40V	R10000 2 56	1	110/02/10			L
12C 3	0001-0004.821	C-KERAMIK EDPT	22N 20/ 80 40V	R10000 2 56	1	110/02/10			L
12C 4	0001-0069.468	C-TRIM KER SCHEIBE	7P - 35P N1500 0,5	OR 301427603 21	1	111/01/06			L
12C 6	0001-0004.410	C-KERAMIK EDPT	56P 2% 63V	NP 0 1B 56	1	110/02/09			L
12C 7	0001-0004.818	C-KERAMIK EDPT	10N 20/100 40V	R10000 2 56	1	110/02/10			L
12C 8	0001-0004.821	C-KERAMIK EDPT	22N 20/ 80 40V	R10000 2 56	1	110/02/10			L
12C 9	0001-0004.818	C-KERAMIK EDPT	10N 20/100 40V	R10000 2 56	1	110/02/10			L
12C 10	0001-0004.672	C-KERAMIK EDPT	560P 10% 63V	R 2000 2 56	1	110/02/10			L
12C 12	0001-0004.449	C-KERAMIK EDPT	68P 2% 63V	NP 0 1B 56	1	110/02/09			L
12C 13	0001-0004.478	C-KERAMIK EDPT	82P 2% 63V	NP 0 1B 56	1	110/02/09			L
12C 14	0001-0004.106	C-KERAMIK EDPT	5P6 0P25 63V	NP 0 1B 56	1	110/02/09			L
12C 15	0001-0004.410	C-KERAMIK EDPT	56P 2% 63V	NP 0 1B 56	1	110/02/09			L
12C 16	0001-0004.698	C-KERAMIK EDPT	1N 10% 63V	R 2000 2 56	1	110/02/10			L
12C 17	0001-0004.821	C-KERAMIK EDPT	22N 20/ 80 40V	R10000 2 56	1	110/02/10			L
12C 19	0001-0041.745	ELKO-AL	47U 10/ 50 16V	B41588 56	1	110/05/40			L
12C 20	0001-0004.698	C-KERAMIK EDPT	1N 10% 63V	R 2000 2 56	1	110/02/10			L
12C 21	0855-0022.006	C-KERAMIK DDMZ	4N7 20/ 80 63V	D 6000 2 04	1				L

Bei Bestellung Sach-Nr. angeben!
When ordering, quote Item No.

SERIE P 0955-8401.000 SPM-15 955/01 AUSF:

TEILE-NR PART NO	SACH-NR ITEM NO	BENENNUNG DESIGNATION	BEZEICHNUNG 1 MARKING 1	BEZEICHNUNG 2 MARKING 2	MG QU	WERKNORM REF.DESIG	BEMERKUNG NOTE	SERIE AF VERSION	C
12C 22	0855-0022.006	C-KERAMIK DDMZ	4N7 20/ 80 63V	D 6000 2 04	1				L
12C 23	0001-0004.795	C-KERAMIK EDPT	4N7 10% 63V	R 2000 2 56	1	110/02/10		E-..	L
12C 27	0001-0004.821	C-KERAMIK EDPT	22N 20/ 80 40V	R10000 2 56	1	110/02/10			L
12C 30	0001-0004.737	C-KERAMIK EDPT	2N2 10% 63V	R 2000 2 56	1	110/02/10			L
12C 31	0001-0004.821	C-KERAMIK EDPT	22N 20/ 80 40V	R10000 2 56	1	110/02/10			L
12C 32	0001-0040.704	ELKO-TA SINT FEST	1U 20% 35V	ETR-1 56	1	110/05/61			L
12C 33	0001-0004.821	C-KERAMIK EDPT	22N 20/ 80 40V	R10000 2 56	1	110/02/10			L
12C 34	0001-0004.698	C-KERAMIK EDPT	1N 10% 63V	R 2000 2 56	1	110/02/10			L
12C 35	0001-0040.966	ELKO-TA SINT FEST	22U 20% 16V	ETR-3 56	1	110/05/61			L
12C 36	0001-0004.818	C-KERAMIK EDPT	10N 20/100 40V	R10000 2 56	1	110/02/10			L
12C 37	0001-0040.704	ELKO-TA SINT FEST	1U 20% 35V	ETR-1 56	1	110/05/61			L
12C 38	0001-0004.779	C-KERAMIK EDPT	3N3 10% 63V	R 2000 2 56	1	110/02/10			L
12C 39	0001-0004.669	C-KERAMIK EDPT	470P 10% 63V	R 2000 2 56	1	110/02/10			L
12C 40	0001-0010.268	C-KF MKT	22N 20% 400V	MKT1822 56	1	110/03/07			L
12C 44	0855-0022.006	C-KERAMIK DDMZ	4N7 20/ 80 63V	D 6000 2 04	1				L
12C 45	0001-0004.122	C-KERAMIK EDPT	6P8 0P25 63V	NP 0 1B 56	1	110/02/09			L
12C 46	0001-0041.790	ELKO-AL	100U 10/ 50 16V	B41588 56	1	110/05/40			L
12C 47	0001-0004.821	C-KERAMIK EDPT	22N 20/ 80 40V	R10000 2 56	1	110/02/10			L
12C 48	0001-0004.698	C-KERAMIK EDPT	1N 10% 63V	R 2000 2 56	1	110/02/10			L
12C 49	0001-0004.698	C-KERAMIK EDPT	1N 10% 63V	R 2000 2 56	1	110/02/10			L
12C 50	0001-0004.575	C-KERAMIK EDPT	150P 2% 63V	N 150 1B 56	1	110/02/09			L
12C 51	0001-0004.559	C-KERAMIK EDPT	120P 2% 63V	NP 0 1B 56	1	110/02/09			L
12C 52	0001-0004.821	C-KERAMIK EDPT	22N 20/ 80 40V	R10000 2 56	1	110/02/10			L
12C 53	0001-0004.106	C-KERAMIK EDPT	5P6 0P25 63V	NP 0 1B 56	1	110/02/09			L
12C 54	0001-0004.449	C-KERAMIK EDPT	68P 2% 63V	NP 0 1B 56	1	110/02/09			L
12C 55	0001-0004.575	C-KERAMIK EDPT	150P 2% 63V	N 150 1B 56	1	110/02/09			L
12C 56	0001-0004.779	C-KERAMIK EDPT	3N3 10% 63V	R 2000 2 56	1	110/02/10			L
12C 57	0001-0004.779	C-KERAMIK EDPT	3N3 10% 63V	R 2000 2 56	1	110/02/10			L
12C 58	0001-0004.821	C-KERAMIK EDPT	22N 20/ 80 40V	R10000 2 56	1	110/02/10			L
12C 59	0001-0004.601	C-KERAMIK EDPT	220P 2% 63V	N 750 1B 56	1	110/02/09			L
12C 60	0001-0004.410	C-KERAMIK EDPT	56P 2% 63V	NP 0 1B 56	1	110/02/09			L
12C 62	0000-7563.605	C-KF KS	4N99 2%5 160V	B31521 56	1	110/03/12			L
12C 63	0001-0004.122	C-KERAMIK EDPT	6P8 0P25 63V	NP 0 1B 56	1	110/02/09			L
12C 64	0001-0014.086	C-TRIM KER SCHEIBE	3P5- 13P N 470 0,5	BL 301427411 21	1	111/01/06			L
12C 65	0001-0004.821	C-KERAMIK EDPT	22N 20/ 80 40V	R10000 2 56	1	110/02/10			L
12C 66	0001-0004.384	C-KERAMIK EDPT	47P 2% 63V	NP 0 1B 56	1	110/02/09			L
12C 67	0001-0004.384	C-KERAMIK EDPT	47P 2% 63V	NP 0 1B 56	1	110/02/09			L
12GL 1	0001-0018.493	DIODE SI	1 N 4448 DO 35		1	ITT			L
12GL 2	0001-0018.493	DIODE SI	1 N 4448 DO 35		1	ITT			L
12GL 9	0001-0018.493	DIODE SI	1 N 4448 DO 35		1	ITT			L
12GL 10	0001-0018.493	DIODE SI	1 N 4448 DO 35		1	ITT			L
12GL 11	0000-7574.982	DIODE SI C-	BB 329 DO 35	NACHFOLGER VON BB 139	1	ITT			L
12IC 1	0001-0068.359	IC-TRANS ARRAY	CA3083 DIC 16		1	RCA			L
12IC 4	0000-7545.597	RINGMISCHER	SRA-1		1	MINICIRC.		D-..	L
12IC 5	0000-7590.173	IC-KOMPARATOR DUAL	LM393N DIP 8		1	NSC			L
12IC 6	0001-0070.761	IC-CMOS	4538BCP DIP 16	MOS	1	MOTOROLA			L
12IC 7	0001-0067.554	IC-CMOS	4066BCP DIP 14	MOS	1	MOTOROLA			L
12IC 9	0000-7583.067	IC-OP.-VERST. FET	ICL7615DCPA DIP 8		1	INTERSIL			L

Bei Bestellung Sach-Nr. angeben!
When ordering, quote Item No.

SERIE M 0955-8401.000 SPM-15 955/01 AUSF:

TEILE-NR PART NO	SACH-NR ITEM NO	BENENNUNG DESIGNATION	BEZEICHNUNG 1 MARKING 1	BEZEICHNUNG 2 MARKING 2	MG QU	WERKNORM REF.DESIG	BEMERKUNG NOTE	SERIE AF VERSION	C
12L 1	0000-7556.104	L-FEST	2U7 10% 1025-30	35 7,9 100 0R55 320MA	1	117/01/03			L
12L 2	0829-7847.007	SPULE			1				A
12L 3	0829-7847.007	SPULE			1				A
12L 5	0829-7847.007	SPULE			1				A
12L 6	0829-7847.007	SPULE			1				A
12Q 1	0829-9705.008	STEUERQUARZ	13.336,700KHZ M 4 A		1				L
12R 1	0001-0006.874	R-KOHLE	470R 5% 0207	56	1	DRALORIC			L
12R 2	0001-0007.019	R-KOHLE	6K8 5% 0207	56	1	DRALORIC			L
12R 3	0000-7570.902	R-MODUL	9X 4K7 5% 0W1	TK250 EXB-F10E-472J	1	018/06/01			L
12R 4	0001-0006.751	R-KOHLE	68R 5% 0207	56	1	DRALORIC			L
12R 5	0001-0006.751	R-KOHLE	68R 5% 0207	56	1	DRALORIC			L
12R 6	0001-0006.971	R-KOHLE	3K3 5% 0207	56	1	DRALORIC			L
12R 8	0001-0006.887	R-KOHLE	560R 5% 0207	56	1	DRALORIC			L
12R 9	0001-0006.751	R-KOHLE	68R 5% 0207	56	1	DRALORIC			L
12R 10	0001-0006.641	R-KOHLE	10R 5% 0207	56	1	DRALORIC			L
12R 11	0001-0006.900	R-KOHLE	820R 5% 0207	56	1	DRALORIC			L
12R 12	0001-0007.006	R-KOHLE	5K6 5% 0207	56	1	DRALORIC			L
12R 13	0001-0006.926	R-KOHLE	1K2 5% 0207	56	1	DRALORIC			L
12R 14	0001-0006.751	R-KOHLE	68R 5% 0207	56	1	DRALORIC			L
12R 15	0001-0006.955	R-KOHLE	2K2 5% 0207	56	1	DRALORIC			L
12R 16	0001-0006.751	R-KOHLE	68R 5% 0207	56	1	DRALORIC			L
12R 17	0001-0006.683	R-KOHLE	22R 5% 0207	56	1	DRALORIC		E-..	L
12R 18	0001-0006.557	R-KOHLE	1R 5% 0207	56	1	DRALORIC			L
12R 19	0000-7585.528	R-METALL	2K21 1% 0204	TK 50 56	1	018/04/01			L
12R 20	0000-7519.471	R-METALL	100R 1% 0204	TK 50 56	1	018/04/01		E-..	L
12R 21	0001-0006.706	R-KOHLE	33R 5% 0207	56	1	DRALORIC			L
12R 34	0001-0006.874	R-KOHLE	470R 5% 0207	56	1	DRALORIC		E-..	L
12R 43	0001-0006.641	R-KOHLE	10R 5% 0207	56	1	DRALORIC			L
12R 45	0001-0006.777	R-KOHLE	82R 5% 0207	56	1	DRALORIC			L
12R 46	0001-0006.793	R-KOHLE	100R 5% 0207	56	1	DRALORIC			L
12R 47	0001-0006.722	R-KOHLE	47R 5% 0207	56	1	DRALORIC			L
12R 48	0001-0007.006	R-KOHLE	5K6 5% 0207	56	1	DRALORIC			L
12R 49	0001-0006.722	R-KOHLE	47R 5% 0207	56	1	DRALORIC			L
12R 50	0001-0006.955	R-KOHLE	2K2 5% 0207	56	1	DRALORIC			L
12R 51	0001-0006.722	R-KOHLE	47R 5% 0207	56	1	DRALORIC			L
12R 52	0001-0007.116	R-KOHLE	47k 5% 0207	56	1	018/03/01			L
12R 53	0001-0007.116	R-KOHLE	47k 5% 0207	56	1	018/03/01			L
12R 54	0001-0006.751	R-KOHLE	68R 5% 0207	56	1	DRALORIC			L
12R 55	0001-0006.968	R-KOHLE	2K7 5% 0207	56	1	DRALORIC			L
12R 56	0001-0006.751	R-KOHLE	68R 5% 0207	56	1	DRALORIC			L
12R 57	0001-0007.022	R-KOHLE	8K2 5% 0207	56	1	DRALORIC			L
12R 58	0001-0007.051	R-KOHLE	15k 5% 0207	56	1	DRALORIC			L
12R 59	0001-0006.861	R-KOHLE	390R 5% 0207	56	1	DRALORIC			L
12R 60	0001-0006.997	R-KOHLE	4K7 5% 0207	56	1	DRALORIC			L
12R 61	0001-0007.006	R-KOHLE	5K6 5% 0207	56	1	DRALORIC			L
12R 62	0001-0006.832	R-KOHLE	220R 5% 0207	56	1	DRALORIC			L
12R 65	0001-0002.043	R-METALL	8K06 1% 0207	TK 50 56	1	DRALORIC			L
12R 66	0001-0007.077	R-KOHLE	22K 5% 0207	56	1	DRALORIC			L
12R 67	0001-0001.921	R-METALL	6K04 1% 0207	TK 50 56	1	DRALORIC			L

SERIE : 0955-8401.000 SPM-15 955/01 AUSF:

TEILE-NR PART NO	SACH-NR ITEM NO	BENENNUNG DESIGNATION	BEZEICHNUNG 1 MARKING 1			BEZEICHNUNG 2 MARKING 2		MG QU	WERKNORM REF.DESIG	BEMERKUNG NOTE	SERIE AF VERSION	C
12R 68	0001-0001.921	R-METALL	6K04	1%	0207	TK 50	56	1	DRALORIC			L
12R 69	0001-0006.557	R-KOHLE	1R	5%	0207		56	1	DRALORIC			L
12R 72	0001-0006.706	R-KOHLE	33R	5%	0207		56	1	DRALORIC			L
12R 73	0001-0006.968	R-KOHLE	2K7	5%	0207		56	1	DRALORIC			L
12R 74	0001-0006.751	R-KOHLE	68R	5%	0207		56	1	DRALORIC			L
12R 75	0001-0006.722	R-KOHLE	47R	5%	0207		56	1	DRALORIC			L
12R 76	0001-0006.997	R-KOHLE	4K7	5%	0207		56	1	DRALORIC			L
12R 77	0001-0007.006	R-KOHLE	5K6	5%	0207		56	1	DRALORIC			L
12R 78	0001-0007.006	R-KOHLE	5K6	5%	0207		56	1	DRALORIC			L
12R 79	0001-0006.751	R-KOHLE	68R	5%	0207		56	1	DRALORIC			L
12R 80	0001-0006.751	R-KOHLE	68R	5%	0207		56	1	DRALORIC			L
12R 81	0001-0006.955	R-KOHLE	2K2	5%	0207		56	1	DRALORIC			L
12R 82	0001-0006.926	R-KOHLE	1K2	5%	0207		56	1	DRALORIC			L
12R 83	0001-0006.722	R-KOHLE	47R	5%	0207		56	1	DRALORIC			L
12R 84	0001-0006.900	R-KOHLE	320R	5%	0207		56	1	DRALORIC			L
12R 85	0001-0006.942	R-KOHLE	1K8	5%	0207		56	1	DRALORIC			L
12R 86	0001-0006.751	R-KOHLE	68R	5%	0207		56	1	DRALORIC			L
12R 87	0001-0007.064	R-KOHLE	18K	5%	0207		56	1	DRALORIC			L
12R 88	0001-0007.048	R-KOHLE	12K	5%	0207		56	1	DRALORIC			L
12R 89	0001-0006.890	R-KOHLE	680R	5%	0207		56	1	DRALORIC			L
12R 90	0001-0006.722	R-KOHLE	47R	5%	0207		56	1	DRALORIC			L
12R 91	0001-0006.955	R-KOHLE	2K2	5%	0207		56	1	DRALORIC			L
12R 92	0001-0007.051	R-KOHLE	15K	5%	0207		56	1	DRALORIC			L
12R 93	0001-0007.048	R-KOHLE	12K	5%	0207		56	1	DRALORIC			L
12R 96	0001-0006.722	R-KOHLE	47R	5%	0207		56	1	DRALORIC			L
12R 97	0001-0002.360	R-METALL	13K2	1%	0207	TK 50	56	1	DRALORIC			L
12R 98	0001-0002.137	R-METALL	10K	1%	0207	TK 50	56	1	DRALORIC			L
12R 99	0001-0007.116	R-KOHLE	47K	5%	0207		56	1	018/03/01			L
12ST 1	0855-0007.005	STECKER	BN 855 A 2 KPL					1				L
12ST 2	0855-0007.005	STECKER	GN 855 A 2 KPL					1				L
12T 1	0001-0016.903	TRANS SI NPN	BFY 90		A TO 72			1	SIEMENS		E-..	L
12T 10	0001-0016.903	TRANS SI NPN	BFY 90		A TO 72			1	SIEMENS			L
12T 11	0001-0016.903	TRANS SI NPN	BFY 90		A TO 72			1	SIEMENS			L
12T 14	0001-0016.903	TRANS SI NPN	BFY 90		A TO 72			1	SIEMENS			L
12T 15	0001-0016.903	TRANS SI NPN	BFY 90		A TO 72			1	SIEMENS			L
12T 16	0001-0016.903	TRANS SI NPN	BFY 90		A TO 72			1	SIEMENS			L
12T 17	0001-0016.903	TRANS SI NPN	BFY 90		A TO 72			1	SIEMENS			L
13C 1	0001-0004.821	C-KERAMIK EDPT	22N	20/ 80	40V	R10000 2	56	1	110/02/10			L
13C 2	0001-0041.525	ELKO-TA SINT FLUESS	100U	20/ 75	30V	ETAH-3	56	1	ERO-TANTAL			L
13C 3	0001-0040.704	ELKO-TA SINT FEST	1U	20%	35V	ETR-1	56	1	110/05/61			L
13C 5	0001-0004.818	C-KERAMIK EDPT	10N	20/100	40V	R10000 2	56	1	110/02/10			L
13C 10	0001-0040.720	ELKO-TA SINT FEST	1U5	20%	25V	ETR-1	56	1	110/05/61			L
13GL 5	0001-0018.493	DIODE SI	1 N 4448		DO 35			1	ITT			L
13IC 1	0001-0067.567	IC-CMOS	4028BCP		DIP 16		MOS	1	MOTOROLA			L
13IC 2	0001-0072.390	IC-LOCMOS	40098BP		DIP 16		858521	1	VALVO			L

Bei Bestellung Sach-Nr. angeben!
When ordering, quote Item No.

SERIE M 0955-8401-000 SPM-15 955/01 AUSF:

TEILE-NR PART NO	SACH-NR ITEM NO	BENENNUNG DESIGNATION	BEZEICHNUNG 1 MARKING 1	BEZEICHNUNG 2 MARKING 2	MG QU	WERKNORM REF.DESIG	BEMERKUNG NOTE	SERIE AF VERSION	C
13IC 3	0001-0072.390	IC-LOCMOS	40098BP DIP 16	858521	1	VALVO			L
13IC 4	0001-0070.884	IC-CMOS	4081BCP DIP 14	MOS	1	MOTOROLA			L
13IC 5	0000-7580.918	IC-LOCMOS	40373BP DIP 20	858521	1	VALVO			L
13IC 6	0001-0072.390	IC-LOCMOS	40098BP DIP 16	858521	1	VALVO			L
13IC 7	0000-7580.918	IC-LOCMOS	40373BP DIP 20	858521	1	VALVO			L
13R 1	0001-0006.557	R-KOHLE	1R 5% 0207	56	1	DRALORIC			L
13R 2	0000-7541.494	R-MODUL	9X100K 5% 0W1	TK250 EXB-F10E-104J	1	MATSUSHITA			L
13R 3	0000-7576.896	R-MODUL	5X100K 5% 0W1	TK250 EXB-F6E-104J	1	MATSUSHITA			L
13R 4	0000-7541.494	R-MODUL	9X100K 5% 0W1	TK250 EXB-F10E-104J	1	018/06/01			L
13R 5	0001-0006.557	R-KOHLE	1R 5% 0207	56	1	DRALORIC			L
13R 6	0001-0006.874	R-KOHLE	470R 5% 0207	56	1	DRALORIC			L
13R 10	0001-0007.035	R-KOHLE	10K 5% 0207	56	1	DRALORIC			L
14BU 1	0000-7604.904	FEDERLEISTE C/2	48 3 2,54X2,54 S1 AU	C143-012A-48S( )#41612T2	1	AMPHENOL		M-..	L
15BU 103	0000-1637.074	WINKELBU. 75 OHM KPL			1				L
15BU 104	0000-7598.696	HF-BUCHSE	BNC 50 M D 5,0	CR EL 26,7 551K504-106A4	1	ROSENBERG			L
15BU 201	0000-3713.006	TF-BUCHSE	2+E M EB LT 4	00-3713.006/4	1	119/01/05			L
15BU 401	0000-3713.006	TF-BUCHSE	2+E M EB LT 4	00-3713.006/4	1	119/01/05			L
15C 1	0001-0010.378	C-KF MKT	100N 20% 100V	MKT1822 56	1	110/03/07			L
15C 2	0001-0004.384	C-KERAMIK EDPT	47P 2% 63V	NP 0 1B 56	1	110/02/09			L
15C 4	0001-0010.323	C-KF MKT	47N 20% 250V	MKT1822 56	1	110/03/07			L
15C 6	0001-0004.591	C-KERAMIK EDPT	180P 2% 63V	N 750 1B 56	1	110/02/09			L
15C 7	0001-0040.966	ELKO-TA SINT FEST	22U 20% 16V	ETR-3 56	1	110/05/61			L
15C 8	0001-0010.323	C-KF MKT	47N 20% 250V	MKT1822 56	1	110/03/07			L
15C 10	0001-0004.591	C-KERAMIK EDPT	180P 2% 63V	N 750 1B 56	1	110/02/09			L
15C 12	0001-0040.966	ELKO-TA SINT FEST	22U 20% 16V	ETR-3 56	1	110/05/61			L
15C 14	0001-0040.966	ELKO-TA SINT FEST	22U 20% 16V	ETR-3 56	1	110/05/61			L
15C 16	0001-0040.966	ELKO-TA SINT FEST	22U 20% 16V	ETR-3 56	1	110/05/61			L
15C 17	0001-0004.384	C-KERAMIK EDPT	47P 2% 63V	NP 0 1B 56	1	110/02/09			L
15C 18	0001-0041.114	ELKO-TA SINT FEST	68U 20% 16V	ETR-4 56	1	110/05/61			L
15C 19	0001-0041.185	ELKO-TA SINT FEST	150U 20% 6V3	ETR-4 56	1	110/05/61			L
15C 22	0001-0004.821	C-KERAMIK EDPT	22N 20/ 80 40V	R10000 2 56	1	110/02/10			L
15C 23	0001-0041.842	ELKO-AL	220U 10/ 50 16V	B41588 56	1	110/05/40			L
15C 101	0001-0004.821	C-KERAMIK EDPT	22N 20/ 80 40V	R10000 2 56	1	110/02/10			L
15C 102	0001-0004.821	C-KERAMIK EDPT	22N 20/ 80 40V	R10000 2 56	1	110/02/10			L
15C 103	0001-0040.775	ELKO-TA SINT FEST	3U3 20% 16V	ETR-1 56	1	110/05/61			L
15C 104	0001-0040.775	ELKO-TA SINT FEST	3U3 20% 16V	ETR-1 56	1	110/05/61			L
15C 105	0001-0040.966	ELKO-TA SINT FEST	22U 20% 16V	ETR-3 56	1	110/05/61			L
15C 106	0001-0041.156	ELKO-TA SINT FEST	100U 20% 10V	ETR-4 56	1	110/05/61			L
15C 107	0001-0041.114	ELKO-TA SINT FEST	68U 20% 16V	ETR-4 56	1	110/05/61			L
15C 108	0001-0004.834	C-KERAMIK EDPT	1P 0P25 63V	P 100 1B 56	1	110/02/09			L
15C 109	0001-0004.025	C-KERAMIK EDPT	2P7 0P25 63V	NP 0 1B 56	1	110/02/09			L
15C 110	0000-7547.223	C-TRIM KER SCHEIBE	2P5- 5P NP 0 0,5	PKT BR 301504111 21	1	111/01/05			L
15C 111	0001-0004.818	C-KERAMIK EDPT	10N 20/100 40V	R10000 2 56	1	110/02/10			L
15C 112	0001-0040.966	ELKO-TA SINT FEST	22U 20% 16V	ETR-3 56	1	110/05/61			L
15C 114	0001-0041.842	ELKO-AL	220U 10/ 50 16V	B41588 56	1	110/05/40			L

Bei Bestellung Sach-Nr. angeben!
When ordering, quote Item No.

SERIE M 0955-8401.000 SPM-15 955/01 AUSF:

TEILE-NR PART NO	SACH-NR ITEM NO	BENENNUNG DESIGNATION	BEZEICHNUNG 1 MARKING 1	BEZEICHNUNG 2 MARKING 2	MG QU	WERKNORM REF.DESIG	BEMERKUNG NOTE	SERIE AF VERSION	C
15C 115	0001-0004.821	C-KERAMIK EDPT	22N 20/ 80 40V	R10000 2 56	1	110/02/10			L
15C 116	0000-7619.274	C-KERAMIK KDPU	470N 20% 50V	X7R VP43BY474MAA	1	110/02/15			L
15C 117	0001-0004.821	C-KERAMIK EDPT	22N 20/ 80 40V	R10000 2 56	1	110/02/10			L
15C 118	0001-0040.966	ELKO-TA SINT FEST	22U 20% 16V	ETR-3 56	1	110/05/61			L
15C 119	0001-0040.704	ELKO-TA SINT FEST	1U 20% 35V	ETR-1 56	1	110/05/61			L
15C 120	0001-0041.156	ELKO-TA SINT FEST	100U 20% 10V	ETR-4 56	1	110/05/61		C-..	L
15C 121	0001-0004.821	C-KERAMIK EDPT	22N 20/ 80 40V	R10000 2 56	1	110/02/10		G-..	L
15C 122	0001-0040.966	ELKO-TA SINT FEST	22U 20% 16V	ETR-3 56	1	110/05/61			L
15C 124	0001-0004.821	C-KERAMIK EDPT	22N 20/ 80 40V	R10000 2 56	1	110/02/10			L
15C 125	0001-0040.966	ELKO-TA SINT FEST	22U 20% 16V	ETR-3 56	1	110/05/61			L
15C 126	0000-7535.303	C-TRIM KER SCHEIBE	3P5- 20P NP 0 0,5	20 BR 301504114 21	1	111/01/05			L
15C 127	0001-0004.067	C-KERAMIK EDPT	3F9 0P25 63V	NP 0 1B 56	1	110/02/09			L
15C 129	0001-0004.821	C-KERAMIK EDPT	22N 20/ 80 40V	R10000 2 56	1	110/02/10			L
15C 130	0001-0004.449	C-KERAMIK EDPT	68P 2% 63V	NP 0 1B 56	1	110/02/09			L
15C 131	0001-0010.378	C-KF MKT	100N 20% 100V	MKT1822 56	1	110/03/07			L
15C 132	0001-0004.384	C-KERAMIK EDPT	47P 2% 63V	NP 0 1B 56	1	110/02/09			L
15C 133	0001-0004.504	C-KERAMIK EDPT	100P 2% 63V	NP 0 1B 56	1	110/02/09			L
15C 134	0001-0004.821	C-KERAMIK EDPT	22N 20/ 80 40V	R10000 2 56	1	110/02/10			L
15C 136	0001-0004.821	C-KERAMIK EDPT	22N 20/ 80 40V	R10000 2 56	1	110/02/10			L
15C 137	0001-0040.966	ELKO-TA SINT FEST	22U 20% 16V	ETR-3 56	1	110/05/61			L
15C 139	0001-0040.856	ELKO-TA SINT FEST	6U8 20% 35V	ETR-3 56	1	110/05/61			L
15C 140	0001-0010.417	C-KF MKT	220N 20% 100V	MKT1822 56	1	110/03/07			L
15C 141	0001-0040.966	ELKO-TA SINT FEST	22U 20% 16V	ETR-3 56	1	110/05/61			L
15C 142	0001-0010.297	C-KF MKT	33N 20% 250V	MKT1822 56	1	110/03/07			L
15C 143	0001-0040.830	ELKO-TA SINT FEST	6U8 20% 6V3	ETR-1 56	1	110/05/61			L
15C 145	0001-0004.818	C-KERAMIK EDPT	10N 20/100 40V	R10000 2 56	1	110/02/10			L
15C 146	0001-0004.818	C-KERAMIK EDPT	10N 20/100 40V	R10000 2 56	1	110/02/10			L
15C 147	0001-0004.818	C-KERAMIK EDPT	10N 20/100 40V	R10000 2 56	1	110/02/10			L
15C 148	0001-0004.818	C-KERAMIK EDPT	10N 20/100 40V	R10000 2 56	1	110/02/10			L
15C 202	0001-0010.378	C-KF MKT	100N 20% 100V	MKT1822 56	1	110/03/07			L
15C 206	0001-0040.966	ELKO-TA SINT FEST	22U 20% 16V	ETR-3 56	1	110/05/61			L
15C 207	0001-0004.821	C-KERAMIK EDPT	22N 20/ 80 40V	R10000 2 56	1	110/02/10			L
15C 208	0001-0040.966	ELKO-TA SINT FEST	22U 20% 16V	ETR-3 56	1	110/05/61			L
15C 209	0001-0004.821	C-KERAMIK EDPT	22N 20/ 80 40V	R10000 2 56	1	110/02/10			L
15C 210	0001-0040.966	ELKO-TA SINT FEST	22U 20% 16V	ETR-3 56	1	110/05/61			L
15C 211	0001-0004.821	C-KERAMIK EDPT	22N 20/ 80 40V	R10000 2 56	1	110/02/10			L
15C 402	0001-0010.501	C-KF MKT	1U 10% 100V	MKT1822 56	1	110/03/07			L
15C 405	0001-0040.775	ELKO-TA SINT FEST	3U3 20% 16V	ETR-1 56	1	110/05/61			L
15C 406	0001-0040.775	ELKO-TA SINT FEST	3U3 20% 16V	ETR-1 56	1	110/05/61			L
15C 407	0000-7586.080	C-KF KP	9N31 1% 63V	B33531 56	1	110/03/13			L
15C 408	0000-7568.040	C-KF KP	16N5 1% 63V	B33531 56	1	110/03/13			L
15C 409	0000-7618.987	C-KF KP	1N4 1% 63V	B33531 56	1	110/03/13			L
15C 411	0000-7575.774	C-KF KP	24N9 1% 63V	B33531 56	1	110/03/13			L
15C 412	0000-7618.990	C-KF KP	576P 1% 63V	B33531 56	1	110/03/13			L
15C 414	0001-0010.417	C-KF MKT	220N 20% 100V	MKT1822 56	1	110/03/07			L
15C 415	0001-0040.801	ELKO-TA SINT FEST	4U7 20% 10V	ETR-1 56	1	110/05/61			L
15C 416	0001-0040.966	ELKO-TA SINT FEST	22U 20% 16V	ETR-3 56	1	110/05/61			L
15C 417	0001-0040.966	ELKO-TA SINT FEST	22U 20% 16V	ETR-3 56	1	110/05/61			L
15C 418	0001-0004.821	C-KERAMIK EDPT	22N 20/ 80 40V	R10000 2 56	1	110/02/10			L
15C 419	0001-0010.378	C-KF MKT	100N 20% 100V	MKT1822 56	1	110/03/07			L
15C 420	0001-0041.790	ELKO-AL	100U 10/ 50 16V	B41588 56	1	110/05/40			L

Bei Bestellung Sach-Nr. angeben!
When ordering, quote Item No.

SERIE M 0955-8401.000 SPM-15 955/01 AUSF:

TEILE-NR PART NO	SACH-NR ITEM NO	BENENNUNG DESIGNATION	BEZEICHNUNG 1 MARKING 1	BEZEICHNUNG 2 MARKING 2	MG QU	WERKNORM REF.DESIG	BEMERKUNG NOTE	SERIE AF VERSION	C
15IC 211	0000-7609.585	IC-D/A-WANDLER	AD7545KN DIP 20	MOS	1	ANAL. DEV			L
15IC 212	0000-7579.602	IC-OP.-VERST.	UA714LHC TO 99		1	FSC			L
15IC 213	0001-0061.987	IC-CMOS	4042BCP DIP 16	MOS	1	MOTOROLA			L
15IC 225	0001-0015.836	IC-OP.-VERST.	UA776TC DIP 8		1	FSC			L
15IC 226	0001-0068.359	IC-TRANS ARRAY	CA3083 DIC 16		1	RCA			L
15IC 227	0001-0061.987	IC-CMOS	4042BCP DIP 16	MOS	1	MOTOROLA			L
15IC 229	0000-7580.109	IC-OP.-VERST. FET	TL061CP DIP 8		1	TEXAS			L
15IC 230	0000-7580.109	IC-OP.-VERST. FET	TL061CP DIP 8		1	TEXAS			L
15IC 231	0000-7576.650	IC-OP.-VERST.	OP20HP DIP 8		1	PMI		B-..	L
15IC 232	0000-7580.109	IC-OP.-VERST. FET	TL061CP DIP 8		1	TEXAS			L
15IC 233	0001-0067.554	IC-CMOS	4066BCP DIP 14	MOS	1	MOTOROLA			L
15IC 234	0000-7580.109	IC-OP.-VERST. FET	TL061CP DIP 8		1	TEXAS			L
15IC 401	0001-0067.156	IC-TTL	74LS04N DIP 14		1	TEXAS			L
15IC 402	0001-0065.695	IC-TTL	74LS00N DIP 14		1	TEXAS			L
15IC 403	0000-7619.300	IC-DUAL OP.-VERST.	UA747PC DIP 14		1	FSC			L
15IC 404	0001-0067.554	IC-CMOS	4066BCP DIP 14	MOS	1	MOTOROLA			L
15IC 405	0001-0016.042	IC-CMOS	4027BCP DIP 16	MOS	1	MOTOROLA			L
15IC 406	0000-7555.901	IC-TTL	74LS393N DIP 14		1	TEXAS			L
15IC 407	0000-7641.051	IC-DUAL OP.-VERST.	TLE2335B DIP 8	DARLINGTON EINGANG	1	SIEMENS		B-..	L
15IC 408	0000-7619.300	IC-DUAL OP.-VERST.	UA747PC DIP 14		1	FSC			L
15IC 409	0001-0068.498	IC-CMOS	4520BCP DIP 16	MOS	1	MOTOROLA			L
15L 1	0001-0066.898	L-FEST	56U 5% 1537-64	40 2,5 12 3R1 184MA	1	117/01/02			L
15L 102	0000-7556.117	L-FEST	3U3 10% 1025-32	40 7,9 90 0R85 260MA	1	117/01/03			L
15L 401	0000-7556.337	L-FEST	220U 10% 1025-76	30 0,8 9 21R 50MA	1	117/01/03			L
15LSP401	0000-7607.969	LAUTSPRECHER	25 OHM 0,3W 31D	AD0198Z25	1	VALVO			L
15P 1	0000-7537.916	R-TRIM CERMET SQUARE	5K 10% 0W2 20	TK 100 T93YA 56	1	017/04/06			L
15P 1	0000-7604.959	R-VAR KOHLE KNOPF-	10K 20% 0W15 LIN	240 61500-003 KNOPF DGR	1	PREH		..- N	L
15P 101	0001-0008.270	R-TRIM CERMET LIEG	1K 20% 0W5 1	TK 100 (ALT 17/02/08)	1	017/02/15			L
15P 102	0001-0008.322	R-TRIM CERMET LIEG	22K 20% 0W5 1	TK 100 (ALT 17/02/08)	1	017/02/15			L
15P 103	0000-7571.723	R-TRIM CERMET SQUARE	1K 10% 0W2 20	TK 100 T93YA 56	1	017/04/06		K-..	L
15P 201	0000-7518.252	R-TRIM CERMET SPIND.	100K 10% 0W5 15	TK 100 MOD. 171	1	CONTELEC			L
15P 202	0001-0007.569	R-TRIM DRAHT SPINDEL	20K 10% 0W7 20	TK 100	1	017/04/04			L
15P 203	0001-0007.491	R-TRIM DRAHT SPINDEL	200R 10% 0W7 20	TK 100	1	017/04/04			L
15P 205	0001-0007.530	R-TRIM DRAHT SPINDEL	2K 10% 0W7 20	TK 100	1	017/04/04			L
15P 206	0001-0007.556	R-TRIM DRAHT SPINDEL	10K 10% 0W7 20	TK 100	1	017/04/04			L
15P 210	0001-0007.527	R-TRIM DRAHT SPINDEL	1K 10% 0W7 20	TK 100	1	017/04/04			L
15P 211	0001-0007.527	R-TRIM DRAHT SPINDEL	1K 10% 0W7 20	TK 100	1	017/04/04			L
15P 401	0001-0008.267	R-TRIM CERMET LIEG	470R 20% 0W5 1	TK 100 (ALT 17/02/08)	1	017/02/15			L
15P 402	0001-0008.319	R-TRIM CERMET LIEG	10K 20% 0W5 1	TK 100 (ALT 17/02/08)	1	017/02/15			L
15Q 401	0955-9707.004	STEUERQUARZ	12.134,400KHZ M 4 C		1				L
15Q 402	0955-9706.005	STEUERQUARZ	8.345,600KHZ M 4 C		1				L
15R 1	0001-0002.137	R-METALL	10K 1% 0207	TK 50 56	1	DRALORIC			L
15R 2	0001-0001.840	R-METALL	4K99 1% 0207	TK 50 56	1	DRALORIC			L
15R 3	0001-0002.030	R-METALL	7K87 1% 0207	TK 50 56	1	DRALORIC			L
15R 5	0000-7608.366	R-METALL	1K91 0%1 0207	TK 15 56	1	018/04/01			L
15R 6	0000-7559.046	R-METALL	604R 0%1 0207	TK 15 56	1	018/04/01			L

Bei Bestellung Sach-Nr. angeben!
When ordering, quote Item No.

SERIE M 0955-8401.000 SPM-15 955/01 AUSF:

TEILE-NR PART NO	SACH-NR ITEM NO	BENENNUNG DESIGNATION	BEZEICHNUNG 1 MARKING 1			BEZEICHNUNG 2 MARKING 2		MG QU	WERKNORM REF.DESIG	BEMERKUNG NOTE	SERIE AF VERSION	C
15R 7	0000-7622.737	R-METALL	191R	0%1	0207	TK 15	56	1	018/04/01			L
15R 8	0000-7610.325	R-METALL	101R	0%1	0207	TK 15	56	1	018/04/01			L
15R 9	0000-7511.136	R-METALL	100R	0%1	0207	TK 15	56	1	018/04/01			L
15R 10	0000-7511.136	R-METALL	100R	0%1	0207	TK 15	56	1	018/04/01			L
15R 11	0001-0007.336	R-KOHLE	3M3	5%	0207		56	1	DRALORIC			L
15R 12	0001-0007.336	R-KOHLE	3M3	5%	0207		56	1	DRALORIC			L
15R 13	0000-7514.298	R-METALL	150R	0%1	0207	TK 15	56	1	018/04/01			L
15R 14	0001-0001.219	R-METALL	1K	1%	0207	TK 50	56	1	DRALORIC			L
15R 15	0001-0062.326	R-METALL	34K8	1%	0207	TK 50	56	1	DRALORIC			L
15R 17	0000-7608.366	R-METALL	1K91	0%1	0207	TK 15	56	1	018/04/01			L
15R 18	0000-7559.046	R-METALL	604R	0%1	0207	TK 15	56	1	018/04/01			L
15R 19	0000-7622.737	R-METALL	191R	0%1	0207	TK 15	56	1	018/04/01			L
15R 20	0000-7610.325	R-METALL	101R	0%1	0207	TK 15	56	1	018/04/01			L
15R 21	0000-7511.136	R-METALL	100R	0%1	0207	TK 15	56	1	018/04/01			L
15R 22	0000-7511.136	R-METALL	100R	0%1	0207	TK 15	56	1	018/04/01			L
15R 23	0001-0007.336	R-KOHLE	3M3	5%	0207		56	1	DRALORIC			L
15R 24	0001-0007.336	R-KOHLE	3M3	5%	0207		56	1	DRALORIC			L
15R 25	0000-7514.298	R-METALL	150R	0%1	0207	TK 15	56	1	018/04/01			L
15R 26	0001-0001.219	R-METALL	1K	1%	0207	TK 50	56	1	DRALORIC			L
15R 27	0001-0062.326	R-METALL	34K8	1%	0207	TK 50	56	1	DRALORIC			L
15R 28	0001-0006.722	R-KOHLE	47R	5%	0207		56	1	DRALORIC			L
15R 29	0001-0002.438	R-METALL	21K5	1%	0207	TK 50	56	1	DRALORIC			L
15R 30	0001-0001.565	R-METALL	2K61	1%	0207	TK 50	56	1	DRALORIC			L
15R 31	0001-0006.971	R-KOHLE	3K3	5%	0207		56	1	DRALORIC			L
15R 32	0001-0006.719	R-KOHLE	39R	5%	0207		56	1	DRALORIC			L
15R 33	0001-0002.137	R-METALL	10K	1%	0207	TK 50	56	1	DRALORIC			L
15R 34	0001-0002.137	R-METALL	10K	1%	0207	TK 50	56	1	DRALORIC			L
15R 35	0001-0006.447	R-METALL	14K3	1%	0207	TK 50	56	1	DRALORIC			L
15R 38	0001-0006.641	R-KOHLE	10R	5%	0207		56	1	DRALORIC		D-..	L
15R 39	0000-7541.494	R-MODUL	9X100K		5% 0W1	TK250 EXB-F10E-104J		1	018/06/01			L
15R 40	0000-7541.494	R-MODUL	9X100K		5% 0W1	TK250 EXB-F10E-104J		1	018/06/01			L
15R 41	0000-7599.048	R-METALL	172R	0%1	0207	TK 15	56	1	018/04/01			L
15R 42	0000-7511.136	R-METALL	100R	0%1	0207	TK 15	56	1	018/04/01			L
15R 45	0000-7599.048	R-METALL	172R	0%1	0207	TK 15	56	1	018/04/01			L
15R 46	0000-7511.136	R-METALL	100R	0%1	0207	TK 15	56	1	018/04/01			L
15R 101	0001-0006.557	R-KOHLE	1R	5%	0207		56	1	DRALORIC			L
15R 102	0001-0007.116	R-KOHLE	47K	5%	0207		56	1	018/03/01			L
15R 103	0001-0007.158	R-KOHLE	100K	5%	0207		56	1	018/03/01			L
15R 104	0001-0000.456	R-METALL	75R	1%	0207	TK 50	56	1	DRALORIC			L
15R 105	0001-0000.456	R-METALL	75R	1%	0207	TK 50	56	1	DRALORIC			L
15R 106	0000-7618.974	R-MODUL	5X 1M		5% 0W1	TK250 EXB-F6E-105J		1	MATSUSHIT			L
15R 107	0001-0000.537	R-METALL	100R	1%	0207	TK 50	56	1	DRALORIC			L
15R 108	0001-0000.537	R-METALL	100R	1%	0207	TK 50	56	1	DRALORIC			L
15R 109	0001-0007.035	R-KOHLE	10K	5%	0207		56	1	DRALORIC			L
15R 110	0001-0007.284	R-KOHLE	1M	5%	0207		56	1	DRALORIC			L
15R 112	0001-0001.219	R-METALL	1K	1%	0207	TK 50	56	1	DRALORIC			L
15R 113	0000-7555.228	0-OHM WIDERSTAND		0,6		100-902		1	VITROHM			S
15R 114	0001-0002.991	R-METALL	100K	1%	0207	TK 50	56	1	DRALORIC			L
15R 115	0001-0002.425	R-METALL	21K	1%	0207	TK 50	56	1	DRALORIC			L
15R 116	0001-0002.522	R-METALL	27K4	1%	0207	TK 50	56	1	DRALORIC			L
15R 117	0001-0006.829	R-KOHLE	180R	5%	0207		56	1	DRALORIC			L

Bei Bestellung Sach-Nr. angeben!
When ordering, quote Item No.

SERIE M 0955-8401.000 SPM-15 955/01 AUSF:

TEILE-NR PART NO	SACH-NR ITEM NO	BENENNUNG DESIGNATION	BEZEICHNUNG 1 MARKING 1			BEZEICHNUNG 2 MARKING 2		MG QU	WERKNORM REF.DESIG	BEMERKUNG NOTE	SERIE AF VERSION	C
15R 118	0001-0001.329	R-METALL	1k37	1%	0207	TK 50	56	1	DRALORIC			L
15R 119	0001-0065.103	R-METALL	12R1	1%	0207	TK 50	56	1	DRALORIC			L
15R 120	0001-0002.195	R-METALL	11K5	1%	0207	TK 50	56	1	DRALORIC			L
15R 121	0001-0006.683	R-KOHLE	22R	5%	0207		56	1	DRALORIC			L
15R 122	0001-0002.108	R-METALL	9k31	1%	0207	TK 50	56	1	DRALORIC			L
15R 126	0001-0003.327	R-METALL	422K	1%	0207	TK 50	56	1	DRALORIC	ABGLEICHWERT		L
15R 127	0001-0002.137	R-METALL	10K	1%	0207	TK 50	56	1	DRALORIC			L
15R 128	0001-0002.137	R-METALL	10K	1%	0207	TK 50	56	1	DRALORIC			L
15R 129	0001-0002.137	R-METALL	10K	1%	0207	TK 50	56	1	DRALORIC			L
15R 130	0001-0006.793	R-KOHLE	100R	5%	0207		56	1	DRALORIC			L
15R 131	0001-0007.048	R-KOHLE	12K	5%	0207		56	1	DRALORIC			L
15R 132	0001-0006.586	R-KOHLE	2R2	5%	0207		56	1	DRALORIC			L
15R 133	0001-0006.719	R-KOHLE	39R	5%	0207		56	1	DRALORIC			L
15R 134	0001-0001.426	R-METALL	1K87	1%	0207	TK 50	56	1	DRALORIC			L
15R 135	0001-0006.683	R-KOHLE	22R	5%	0207		56	1	DRALORIC			L
15R 136	0001-0007.190	R-KOHLE	220K	5%	0207		56	1	018/03/01			L
15R 137	0001-0002.629	R-METALL	36K5	1%	0207	TK 50	56	1	DRALORIC			L
15R 138	0001-0006.586	R-KOHLE	2R2	5%	0207		56	1	DRALORIC			L
15R 139	0001-0001.798	R-METALL	4K53	1%	0207	TK 50	56	1	DRALORIC			L
15R 140	0001-0001.277	R-METALL	1K21	1%	0207	TK 50	56	1	DRALORIC			L
15R 141	0001-0006.751	R-KOHLE	68R	5%	0207		56	1	DRALORIC			L
15R 142	0001-0006.751	R-KOHLE	68R	5%	0207		56	1	DRALORIC			L
15R 143	0001-0065.242	R-METALL	43R2	1%	0207	TK 50	56	1	DRALORIC			L
15R 144	0001-0000.443	R-METALL	71R5	1%	0207	TK 50	56	1	DRALORIC			L
15R 145	0001-0000.456	R-METALL	75R	1%	0207	TK 50	56	1	DRALORIC			L
15R 146	0001-0007.132	R-KOHLE	68K	5%	0207		56	1	018/03/01			L
15R 147	0001-0007.116	R-KOHLE	47K	5%	0207		56	1	018/03/01			L
15R 150	0001-0006.696	R-KOHLE	27R	5%	0207		56	1	DRALORIC			L
15R 151	0001-0006.722	R-KOHLE	47R	5%	0207		56	1	DRALORIC			L
15R 152	0001-0006.793	R-KOHLE	100R	5%	0207		56	1	DRALORIC			L
15R 153	0001-0006.683	R-KOHLE	22R	5%	0207		56	1	DRALORIC			L
15R 154	0001-0006.997	R-KOHLE	4K7	5%	0207		56	1	DRALORIC			L
15R 155	0001-0001.125	R-METALL	750R	1%	0207	TK 50	56	1	DRALORIC			L
15R 156	0001-0001.219	R-METALL	1K	1%	0207	TK 50	56	1	DRALORIC			L
15R 157	0001-0006.887	R-KOHLE	560R	5%	0207		56	1	DRALORIC			L
15R 158	0001-0065.158	R-METALL	20R	1%	0207	TK 50	56	1	DRALORIC			L
15R 159	0001-0006.874	R-KOHLE	470R	5%	0207		56	1	DRALORIC			L
15R 160	0001-0006.926	R-KOHLE	1K2	5%	0207		56	1	DRALORIC			L
15R 161	0001-0007.255	R-KOHLE	560K	5%	0207		56	1	018/03/01			L
15R 162	0001-0006.793	R-KOHLE	100R	5%	0207		56	1	DRALORIC			L
15R 163	0001-0007.239	R-KOHLE	470K	5%	0207		56	1	018/03/01			L
15R 164	0001-0001.125	R-METALL	750R	1%	0207	TK 50	56	1	DRALORIC			L
15R 165	0001-0002.755	R-METALL	49K9	1%	0207	TK 50	56	1	DRALORIC			L
15R 166	0001-0002.755	R-METALL	49K9	1%	0207	TK 50	56	1	DRALORIC			L
15R 170	0001-0006.683	R-KOHLE	22R	5%	0207		56	1	DRALORIC			L
15R 171	0001-0000.524	R-METALL	93R1	1%	0207	TK 50	56	1	DRALORIC			L
15R 172	0001-0006.997	R-KOHLE	4K7	5%	0207		56	1	DRALORIC			L
15R 173	0001-0002.179	R-METALL	11K	1%	0207	TK 50	56	1	DRALORIC			L
15R 174	0001-0002.179	R-METALL	11K	1%	0207	TK 50	56	1	DRALORIC			L
15R 175	0001-0002.137	R-METALL	10K	1%	0207	TK 50	56	1	DRALORIC			L
15R 176	0001-0002.137	R-METALL	10K	1%	0207	TK 50	56	1	DRALORIC			L

SERIE M 0955-8401.000 SPM-15 955/01 AUSF:

TEILE-NR PART NO	SACH-NR ITEM NO	BENENNUNG DESIGNATION	BEZEICHNUNG 1 MARKING 1			BEZEICHNUNG 2 MARKING 2		MG QU	WERKNORM REF.DESIG	BEMERKUNG NOTE	SERIE AF VERSION	C
15R 177	0001-0006.751	R-KOHLE	68R	5%	0207		56	1	DRALORIC			L
15R 180	0001-0007.035	R-KOHLE	10K	5%	0207		56	1	DRALORIC			L
15R 181	0001-0007.239	R-KOHLE	470K	5%	0207		56	1	018/03/01			L
15R 182	0001-0001.293	R-METALL	1K27	1%	0207	TK 50	56	1	DRALORIC			L
15R 183	0001-0001.219	R-METALL	1K	1%	0207	TK 50	56	1	DRALORIC			L
15R 184	0001-0006.751	R-KOHLE	68R	5%	0207		56	1	DRALORIC			L
15R 185	0001-0002.111	R-METALL	9K53	1%	0207	TK 50	56	1	DRALORIC			L
15R 203	0000-7576.896	R-MODUL	5X100K		5% 0W1	TK250 EXB-F6E-104J		1	MATSUSHITA			L
15R 204	0001-0002.182	R-METALL	11K3	1%	0207	TK 50	56	1	DRALORIC			L
15R 205	0001-0001.675	R-METALL	3K4	1%	0207	TK 50	56	1	DRALORIC			L
15R 207	0001-0002.247	R-METALL	13K3	1%	0207	TK 50	56	1	DRALORIC			L
15R 208	0000-7572.078	R-METALL	16K	0%1	0207	TK 15	56	1	018/04/01			L
15R 209	0000-7512.698	R-METALL	4K02	0%1	0207	TK 15	56	1	018/04/01			L
15R 211	0000-7559.059	R-METALL	887R	0%1	0207	TK 15	56	1	018/04/01			L
15R 212	0000-7503.270	R-METALL	10K	0%1	0207	TK 15	56	1	018/04/01			L
15R 213	0000-7608.353	R-METALL	1K93	0%1	0207	TK 15	56	1	018/04/01			L
15R 214	0000-7577.756	R-METALL	5K11	0%1	0207	TK 15	56	1	018/04/01			L
15R 215	0000-7622.643	R-METALL	2K05	0%1	0207	TK 15	56	1	018/04/01			L
15R 216	0000-7550.317	R-METALL	12K3	0%1	0207	TK 15	56	1	018/04/01			L
15R 217	0000-7548.510	R-METALL	3K24	0%1	0207	TK 15	56	1	018/04/01			L
15R 218	0000-7519.620	R-METALL	2K	0%1	0207	TK 15	56	1	018/04/01			L
15R 219	0001-0000.537	R-METALL	100R	1%	0207	TK 50	56	1	DRALORIC			L
15R 220	0000-7563.812	R-METALL	2K8	0%1	0207	TK 15	56	1	018/04/01			L
15R 221	0000-7572.049	R-METALL	7K15	0%1	0207	TK 15	56	1	018/04/01			L
15R 240	0000-7503.173	R-METALL	1K05	0%1	0207	TK 15	56	1	018/04/01			L
15R 241	0000-7604.674	R-METALL	1K38	0%1	0207	TK 15	56	1	018/04/01			L
15R 242	0000-7609.297	R-METALL	14K7	0%1	0207	TK 15	56	1	018/04/01			L
15R 243	0000-7608.230	R-METALL	13K0	0%1	0207	TK 15	56	1	018/04/01			L
15R 244	0000-7608.243	R-METALL	11K8	0%1	0207	TK 15	56	1	018/04/01			L
15R 245	0000-7598.227	R-METALL	11K	0%1	0207	TK 15	56	1	018/04/01			L
15R 247	0001-0007.268	R-KOHLE	680K	5%	0207		56	1	018/03/01			L
15R 250	0000-7609.310	R-METALL	19K6	0%1	0207	TK 15	56	1	018/04/01			L
15R 251	0000-7609.310	R-METALL	19K6	0%1	0207	TK 15	56	1	018/04/01			L
15R 252	0000-7609.310	R-METALL	19K6	0%1	0207	TK 15	56	1	018/04/01			L
15R 253	0000-7609.310	R-METALL	19K6	0%1	0207	TK 15	56	1	018/04/01			L
15R 255	0000-7512.795	R-METALL	18K7	0%1	0207	TK 15	56	1	018/04/01			L
15R 256	0000-7609.307	R-METALL	15K2	0%1	0207	TK 15	56	1	018/04/01			L
15R 257	0000-7519.808	R-METALL	12K4	0%1	0207	TK 15	56	1	018/04/01			L
15R 258	0000-7503.270	R-METALL	10K	0%1	0207	TK 15	56	1	018/04/01			L
15R 260	0000-7510.140	R-METALL	100K	0%1	0207	TK 15	56	1	018/04/01			L
15R 261	0000-7503.270	R-METALL	10K	0%1	0207	TK 15	56	1	018/04/01			L
15R 262	0000-7503.270	R-METALL	10K	0%1	0207	TK 15	56	1	018/04/01			L
15R 263	0000-7503.270	R-METALL	10K	0%1	0207	TK 15	56	1	018/04/01			L
15R 264	0000-7555.011	R-METALL	20K	0%1	0207	TK 15	56	1	018/04/01			L
15R 265	0001-0002.056	R-METALL	8K25	1%	0207	TK 50	56	1	DRALORIC			L
15R 266	0000-7503.270	R-METALL	10K	0%1	0207	TK 15	56	1	018/04/01			L
15R 272	0000-7555.011	R-METALL	20K	0%1	0207	TK 15	56	1	018/04/01			L
15R 273	0000-7572.120	R-METALL	23K7	0%1	0207	TK 15	56	1	018/04/01			L
15R 274	0000-7512.630	R-METALL	1K3	0%1	0207	TK 15	56	1	018/04/01			L
15R 276	0000-7588.570	R-METALL	49K9	0%1	0207	TK 15	56	1	018/04/01			L
15R 277	0000-7568.998	R-METALL	22K1	0%1	0207	TK 15	56	1	018/04/01			L

Bei Bestellung Sach-Nr. angeben!
When ordering, quote Item No.

SERIE M 0955-8401.000 SPM-15 955/01 AUSF:

TEILE-NR PART NO	SACH-NR ITEM NO	BENENNUNG DESIGNATION	BEZEICHNUNG 1 MARKING 1			BEZEICHNUNG 2 MARKING 2		MG QU	WERKNORM REF.DESIG	BEMERKUNG NOTE	SERIE AF VERSION	C
15R 280	0001-0002.137	R-METALL	10K	1%	0207	TK 50	56	1	DRALORIC			L
15R 282	0001-0002.137	R-METALL	10K	1%	0207	TK 50	56	1	DRALORIC			L
15R 283	0000-7555.011	R-METALL	20K	0%1	0207	TK 15	56	1	018/04/01			L
15R 284	0001-0001.219	R-METALL	1K	1%	0207	TK 50	56	1	DRALORIC			L
15R 285	0001-0002.043	R-METALL	8K06	1%	0207	TK 50	56	1	DRALORIC			L
15R 286	0001-0001.675	R-METALL	3K4	1%	0207	TK 50	56	1	DRALORIC			L
15R 287	0001-0001.714	R-METALL	3K74	1%	0207	TK 50	56	1	DRALORIC			L
15R 290	0001-0000.812	R-METALL	316R	1%	0207	TK 50	56	1	DRALORIC			L
15R 291	0001-0001.840	R-METALL	4K99	1%	0207	TK 50	56	1	DRALORIC			L
15R 292	0001-0002.014	R-METALL	7K5	1%	0207	TK 50	56	1	DRALORIC			L
15R 293	0001-0007.035	R-KOHLE	10K	5%	0207		56	1	DRALORIC			L
15R 294	0001-0006.719	R-KOHLE	39R	5%	0207		56	1	DRALORIC			L
15R 295	0001-0006.557	R-KOHLE	1R	5%	0207		56	1	DRALORIC			L
15R 296	0001-0006.667	R-KOHLE	15R	5%	0207		56	1	DRALORIC			L
15R 297	0001-0006.557	R-KOHLE	1R	5%	0207		56	1	DRALORIC			L
15R 298	0001-0006.719	R-KOHLE	39R	5%	0207		56	1	DRALORIC			L
15R 299	0001-0006.557	R-KOHLE	1R	5%	0207		56	1	DRALORIC			L
15R 300	0000-7598.230	R-METALL	29K8	0%1	0207	TK 15	56	1	018/04/01			L
15R 301	0000-7590.380	R-METALL	5K62	0%1	0207	TK 15	56	1	018/04/01			L
15R 302	0001-0007.035	R-KOHLE	10K	5%	0207		56	1	DRALORIC			L
15R 304	0001-0007.158	R-KOHLE	100K	5%	0207		56	1	018/03/01			L
15R 401	0001-0006.777	R-KOHLE	82R	5%	0207		56	1	DRALORIC			L
15R 402	0001-0001.840	R-METALL	4K99	1%	0207	TK 50	56	1	DRALORIC			L
15R 403	0001-0001.455	R-METALL	2K	1%	0207	TK 50	56	1	DRALORIC			L
15R 404	0001-0002.218	R-METALL	12K1	1%	0207	TK 50	56	1	DRALORIC			L
15R 405	0001-0001.950	R-METALL	6K49	1%	0207	TK 50	56	1	DRALORIC			L
15R 406	0001-0006.984	R-KOHLE	3K9	5%	0207		56	1	DRALORIC			L
15R 407	0001-0002.991	R-METALL	100K	1%	0207	TK 50	56	1	DRALORIC			L
15R 408	0001-0002.991	R-METALL	100K	1%	0207	TK 50	56	1	DRALORIC			L
15R 409	0001-0002.580	R-METALL	31K6	1%	0207	TK 50	56	1	DRALORIC			L
15R 412	0001-0002.580	R-METALL	31K6	1%	0207	TK 50	56	1	DRALORIC			L
15R 413	0001-0002.580	R-METALL	31K6	1%	0207	TK 50	56	1	DRALORIC			L
15R 415	0001-0002.991	R-METALL	100K	1%	0207	TK 50	56	1	DRALORIC			L
15R 416	0001-0002.991	R-METALL	100K	1%	0207	TK 50	56	1	DRALORIC			L
15R 417	0001-0002.179	R-METALL	11K	1%	0207	TK 50	56	1	DRALORIC			L
15R 418	0001-0002.179	R-METALL	11K	1%	0207	TK 50	56	1	DRALORIC			L
15R 420	0001-0002.179	R-METALL	11K	1%	0207	TK 50	56	1	DRALORIC			L
15R 421	0001-0007.035	R-KOHLE	10K	5%	0207		56	1	DRALORIC			L
15R 422	0001-0002.179	R-METALL	11K	1%	0207	TK 50	56	1	DRALORIC			L
15R 423	0001-0001.976	R-METALL	6K81	1%	0207	TK 50	56	1	DRALORIC			L
15R 424	0001-0002.179	R-METALL	11K	1%	0207	TK 50	56	1	DRALORIC			L
15R 425	0001-0002.179	R-METALL	11K	1%	0207	TK 50	56	1	DRALORIC			L
15R 426	0001-0001.976	R-METALL	6K81	1%	0207	TK 50	56	1	DRALORIC			L
15R 427	0001-0002.069	R-METALL	8K45	1%	0207	TK 50	56	1	DRALORIC			L
15R 428	0001-0006.719	R-KOHLE	39R	5%	0207		56	1	DRALORIC			L
15R 430	0001-0002.137	R-METALL	10K	1%	0207	TK 50	56	1	DRALORIC			L
15R 431	0001-0065.365	R-METALL	53K6	1%	0207	TK 50	56	1	DRALORIC			L
15R 432	0001-0001.031	R-METALL	604R	1%	0207	TK 50	56	1	DRALORIC			L
15R 433	0001-0006.719	R-KOHLE	39R	5%	0207		56	1	DRALORIC			L
15R 434	0001-0002.807	R-METALL	57K6	1%	0207	TK 50	56	1	DRALORIC			L
15R 435	0001-0002.687	R-METALL	42K2	1%	0207	TK 50	56	1	DRALORIC			L

Bei Bestellung Sach-Nr. angeben!
When ordering, quote Item No.

SERIE M 0955-8401.000 SPM-15 955/01 AUSF:

TEILE-NR PART NO	SACH-NR ITEM NO	BENENNUNG DESIGNATION	BEZEICHNUNG 1 MARKING 1	BEZEICHNUNG 2 MARKING 2	MG QU	WERKNORM REF.DESIG	BEMERKUNG NOTE	SERIE AF VERSION	C
15R 436	0001-0006.861	R-KOHLE	390R 5% 0207	56	1	DRALORIC			L
15R 437	0001-0002.357	R-METALL	17K8 1% 0207	TK 50 56	1	DRALORIC			L
15R 438	0001-0001.219	R-METALL	1K 1% 0207	TK 50 56	1	DRALORIC			L
15R 439	0001-0002.991	R-METALL	100K 1% 0207	TK 50 56	1	DRALORIC			L
15R 440	0001-0007.035	R-KOHLE	10k 5% 0207	56	1	DRALORIC			L
15R 441	0001-0007.158	R-KOHLE	100K 5% 0207	56	1	018/03/01			L
15R 442	0001-0007.035	R-KOHLE	10K 5% 0207	56	1	DRALORIC			L
15P 443	0000-7618.961	R-MODUL	5X 2K2 5% 0W1	TK250 EXB-F10V-222J	1	018/06/01			L
15P 445	0001-0006.816	R-KOHLE	150R 5% 0207	56	1	DRALORIC			L
15R 449	0001-0006.816	R-KOHLE	150R 5% 0207	56	1	DRALORIC			L
15R 450	0001-0006.557	R-KOHLE	1R 5% 0207	56	1	DRALORIC			L
15R 451	0001-0006.557	R-KOHLE	1R 5% 0207	56	1	DRALORIC			L
15R 452	0001-0006.609	R-KOHLE	4R7 5% 0207	56	1	DRALORIC		C-..	L
15R 453	0001-0006.719	R-KOHLE	39R 5% 0207	56	1	DRALORIC			L
15R 454	0001-0006.557	R-KOHLE	1R 5% 0207	56	1	DRALORIC			L
15REL101	0000-7619.326	RELAIS GEPOLT BISTAB	001 AU 12V 1K5 HD	RSL12V	1	SDS			L
15REL102	0000-7619.326	RELAIS GEPOLT BISTAB	001 AU 12V 1K5 HD	RSL12V	1	SDS			L
15S 401	0000-1832.015	S-DUAL-IN-LINE	1 100 SN HAKEN-	GEK.: C42315-A1347-A124	1	SIEMENS			L
15ST 102	0000-2682.002	HF-STECKER	SUBMINAX 75A 75 V A	LT LP 11,0	1	119/08/03			L
15ST 103	0000-2682.002	HF-STECKER	SUBMINAX 75A 75 V A	LT LP 11,0	1	119/08/03			L
15T 1	0001-0016.518	TRANS SI NPN	BCY 59 X (D) A TO 18		1	TFK			L
15T 101	0001-0016.628	TRANS SI N JFET	BF 245 A D SOT 54		1	VALVO			L
15T 102	0001-0016.550	TRANS SI PNP	BCY 78 X (D) A TO 18		1	MOT			L
15T 104	0001-0016.903	TRANS SI NPN	BFY 90 A TO 72		1	SIEMENS			L
15T 105	0001-0016.712	TRANS SI PNP	2 N 4035 (BFX48) A TO 18		1	SGS			L
15T 107	0001-0016.518	TRANS SI NPN	BCY 59 X (D) A TO 18		1	TFK			L
15T 108	0001-0016.518	TRANS SI NPN	BCY 59 X (D) A TO 18		1	TFK			L
15T 109	0001-0016.903	TRANS SI NPN	BFY 90 A TO 72		1	SIEMENS			L
15T 111	0000-7564.219	TRANS SI N VMOS	2 N 6660 G TO 39	MOS	1	SILICONIX			L
15T 112	0001-0016.550	TRANS SI PNP	BCY 78 X (D) A TO 18		1	MOT			L
15T 201	0000-7598.971	TRANS SI P DMOS	BS 250 G TO 92		1	ITT			L
15T 202	0001-0016.550	TRANS SI PNP	BCY 78 X (D) A TO 18		1	MOT			L
15T 401	0000-7619.287	TRANS SI N VMOS	BS 170 6 TO 92	MOS	1	ITT			L
15T 402	0000-7619.287	TRANS SI N VMOS	BS 170 6 TO 92	MOS	1	ITT			L
15T 403	0001-0016.770	TRANS SI NPN	2 N 2219 (BFX97) A TO 39		1	MOTOROLA			L
15T 404	0001-0017.287	TRANS SI PNP	2 N 2905 A TO 39		1	MOTOROLA			L
19C 1	0001-0010.378	C-KF MKT	100N 20% 100V	MKT1822 56	1	110/03/07			L
19C 2	0001-0010.378	C-KF MKT	100N 20% 100V	MKT1822 56	1	110/03/07			L
19C 3	0001-0004.203	C-KERAMIK EDPT	12P 2% 63V	NP 0 1B 56	1	110/02/09			L
19C 5	0001-0004.203	C-KERAMIK EDPT	12P 2% 63V	NP 0 1B 56	1	110/02/09			L
19C 6	0001-0004.203	C-KERAMIK EDPT	12P 2% 63V	NP 0 1B 56	1	110/02/09			L
19C 7	0001-0004.821	C-KERAMIK EDPT	22N 20/ 80 40V	R10000 2 56	1	110/02/10			L
19C 8	0000-7566.505	C-KF MKT	10N 20% 400V	MKT1822 56	1	110/03/07			L
19C 9	0000-7566.505	C-KF MKT	10N 20% 400V	MKT1822 56	1	110/03/07			L
19C 10	0001-0040.830	ELKO-TA SINT FEST	6U8 20% 6V3	ETR-1 56	1	110/05/61			L

Bei Bestellung Sach-Nr. angeben!
When ordering, quote Item No.

SERIE M 0955-8401.000 SPM-15 955/01 AUSF:

TEILE-NR PART NO	SACH-NR ITEM NO	BENENNUNG DESIGNATION	BEZEICHNUNG 1 MARKING 1	BEZEICHNUNG 2 MARKING 2	MG QU	WERKNORM REF.DESIG	BEMERKUNG NOTE	SERIE AF VERSION	C
19C 11	0001-0040.775	ELKO-TA SINT FEST	3U3 20% 16V	ETR-1 56	1	110/05/61			L
19C 12	0001-0040.775	ELKO-TA SINT FEST	3U3 20% 16V	ETR-1 56	1	110/05/61			L
19C 20	0001-0004.698	C-KERAMIK EDPT	1N 10% 63V	R 2000 2 56	1	110/02/10			L
19C 21	0001-0004.698	C-KERAMIK EDPT	1N 10% 63V	R 2000 2 56	1	110/02/10			L
19C 22	0001-0004.287	C-KERAMIK EDPT	22P 2% 63V	NP 0 1B 56	1	110/02/09			L
19C 23	0001-0004.287	C-KERAMIK EDPT	22P 2% 63V	NP 0 1B 56	1	110/02/09			L
19C 25	0001-0010.161	C-KF MKT	3U3 10% 100V	MKT1813 56	1	110/03/06			L
19C 26	0001-0040.995	ELKO-TA SINT FEST	33U 20% 10V	ETR-3 56	1	110/05/61			L
19GL 1	0001-0018.723	DIODE SI Z-	ZPD 3 DO 35		1	ITT			L
19GL 2	0001-0018.723	DIODE SI Z-	ZPD 3 DO 35		1	ITT			L
19GL 51	0001-0018.493	DIODE SI	1 N 4448 DO 35		1	ITT			L
19GL 52	0001-0018.493	DIODE SI	1 N 4448 DO 35		1	ITT			L
19GL 53	0001-0018.493	DIODE SI	1 N 4448 DO 35		1	ITT			L
19GL 54	0001-0018.493	DIODE SI	1 N 4448 DO 35		1	ITT			L
19GL 55	0001-0018.493	DIODE SI	1 N 4448 DO 35		1	ITT			L
19GL 56	0001-0018.493	DIODE SI	1 N 4448 DO 35		1	ITT			L
19I 1	0955-8103.007	INSTRUMENT			1			F-..	L
19IC 1	0000-7519.840	IC-CMOS	4050BCP DIP 16	MOS	1	MOTOROLA			L
19IC 2	0000-7519.840	IC-CMOS	4050BCP DIP 16	MOS	1	MOTOROLA			L
19IC 3	0000-7519.840	IC-CMOS	4050BCP DIP 16	MOS	1	MOTOROLA			L
19IC 4	0001-0070.884	IC-CMOS	4081BCP DIP 14	MOS	1	MOTOROLA			L
19IC 5	0001-0071.016	IC-CMOS	4075BCP DIP 14	MOS	1	MOTOROLA			L
19IC 6	0001-0015.988	IC-CMOS	4011BCP DIP 14	MOS	1	MOTOROLA			L
19IC 7	0001-0068.197	IC CMOS	4049UBCP DIP 16	MOS	1	MOTOROLA			L
19IC 8	0001-0067.567	IC-CMOS	4028BCP DIP 16	MOS	1	MOTOROLA			L
19IC 9	0000-7580.918	IC-LOCMOS	40373BP DIP 20	858521	1	VALVO			L
19IC 10	0000-7594.603	IC-A/D-WANDLER	4433P DIP 24	MOS	1	MOTOROLA			L
19IC 11	0001-0070.884	IC-CMOS	4081BCP DIP 14	MOS	1	MOTOROLA			L
19IC 12	0000-7580.918	IC-LOCMOS	40373BP DIP 20	858521	1	VALVO			L
19IC 13	0001-0061.987	IC-CMOS	4042BCP DIP 16	MOS	1	MOTOROLA			L
19IC 15	0001-0070.839	IC-CMOS	4508BCP DIP 24	MOS	1	MOTOROLA			L
19IC 16	0001-0016.042	IC-CMOS	4027BCP DIP 16	MOS	1	MOTOROLA			L
19IC 17	0001-0070.897	IC-CMOS	4077BCP DIP 14	MOS	1	MOTOROLA			L
19IC 18	0000-7529.584	IC-CMOS	CDP1824E DIP 18	MOS	1	RCA			L
19IC 19	0001-0070.868	IC-CMOS	4082BCP DIP 14	MOS	1	MOTOROLA			L
19IC 20	0001-0070.884	IC-CMOS	4081BCP DIP 14	MOS	1	MOTOROLA			L
19IC 21	0000-7548.853	IC-CMOS	4503BCP DIP 16	MOS	1	MOTOROLA			L
19IC 25	0001-0068.540	IC-CMOS	4572UBCP DIP 16	MOS	1	MOTOROLA			L
19IC 26	0000-7514.845	IC-CMOS	4071BCP DIP 14	MOS	1	MOTOROLA			L
19IC 27	0001-0070.884	IC-CMOS	4081BCP DIP 14	MOS	1	MOTOROLA			L
19IC 28	0001-0068.197	IC CMOS	4049UBCP DIP 16	MOS	1	MOTOROLA			L
19IC 30	0001-0070.839	IC-CMOS	4508BCP DIP 24	MOS	1	MOTOROLA			L
19IC 31	0000-7550.605	IC-CMOS	4561BCP DIP 14	MOS	1	MOTOROLA			L
19IC 32	0001-0071.595	IC-CMOS	4560BCP DIP 16	MOS	1	MOTOROLA			L
19IC 33	0000-7548.853	IC-CMOS	4503BCP DIP 16	MOS	1	MOTOROLA			L
19IC 35	0001-0016.042	IC-CMOS	4027BCP DIP 16	MOS	1	MOTOROLA			L
19IC 36	0001-0068.692	IC-CMOS	4516BCP DIP 16	MOS	1	MOTOROLA			L
19IC 37	0000-7560.721	IC-CMOS	ICM7555IPA DIP 8	MOS	1	INTERSIL			L

Bei Bestellung Sach-Nr. angeben!
When ordering, quote Item No.

SERIE M 0955-8401.000 SPM-15 955/01 AUSF:

TEILE-NR PART NO	SACH-NR ITEM NO	BENENNUNG DESIGNATION	BEZEICHNUNG 1 MARKING 1	BEZEICHNUNG 2 MARKING 2	MG QU	WERKNORM REF.DESIG	BEMERKUNG NOTE	SERIE AF VERSION	C
19IC 50	0001-0067.567	IC-CMOS	4028BCP DIP 16	MOS	1	MOTOROLA			L
19IC 51	0001-0072.390	IC-LOCMOS	40098BP DIP 16	858521	1	VALVO			L
19IC 52	0001-0072.390	IC-LOCMOS	40098BP DIP 16	858521	1	VALVO			L
19IC 53	0001-0070.839	IC-CMOS	4508BCP DIP 24	MOS	1	MOTOROLA			L
19IC 55	0001-0015.988	IC-CMOS	4011BCP DIP 14	MOS	1	MOTOROLA			L
19IC 56	0001-0015.988	IC-CMOS	4011BCP DIP 14	MOS	1	MOTOROLA			L
19IC 57	0001-0070.868	IC-CMOS	4082BCP DIP 14	MOS	1	MOTOROLA			L
19IC 60	0001-0067.431	IC-CMOS	4047BE DIP 14	MOS	1	RCA			L
19IC 61	0001-0061.987	IC-CMOS	4042BCP DIP 16	MOS	1	MOTOROLA			L
19IC 62	0001-0016.055	IC-CMOS	4029BCP DIP 16	MOS	1	MOTOROLA			L
19IC 63	0000-7548.853	IC-CMOS	4503BCP DIP 16	MOS	1	MOTOROLA			L
19IC 64	0001-0016.055	IC-CMOS	4029BCP DIP 16	MOS	1	MOTOROLA			L
19IC 65	0000-7548.853	IC-CMOS	4503BCP DIP 16	MOS	1	MOTOROLA			L
19IC 66	0001-0016.055	IC-CMOS	4029BCP DIP 16	MOS	1	MOTOROLA			L
19IC 67	0001-0016.055	IC-CMOS	4029BCP DIP 16	MOS	1	MOTOROLA			L
19IC 68	0000-7548.853	IC-CMOS	4503BCP DIP 16	MOS	1	MOTOROLA			L
19IC 70	0001-0070.839	IC-CMOS	4508BCP DIP 24	MOS	1	MOTOROLA			L
19IC 71	0001-0070.839	IC-CMOS	4508BCP DIP 24	MOS	1	MOTOROLA			L
19IC 75	0000-7569.450	IC-CMOS	4504BCP DIP 16	MOS	1	MOTOROLA			L
19IC 76	0000-7569.450	IC-CMOS	4504BCP DIP 16	MOS	1	MOTOROLA			L
19IC 79	0001-0015.991	IC-CMOS	4013BCP DIP 14	MOS	1	MOTOROLA			L
19IC 80	0001-0015.991	IC-CMOS	4013BCP DIP 14	MOS	1	MOTOROLA			L
19IC 90	0001-0015.988	IC-CMOS	4011BCP DIP 14	MOS	1	MOTOROLA			L
19IC 92	0000-7599.417	IC-DUAL OPVERST. FET	TL062ACP DIP 8		1	TEXAS			L
19R 1	0000-7541.494	R-MODUL	9X100K 5% 0W1	TK250 EXB-F10E-104J	1	018/06/01			L
19R 2	0000-7541.494	R-MODUL	9X100K 5% 0W1	TK250 EXB-F10E-104J	1	018/06/01			L
19R 5	0001-0007.035	R-KOHLE	10K 5% 0207	56	1	DRALORIC			L
19R 6	0001-0002.920	R-METALL	80K6 1% 0207	TK 50 56	1	DRALORIC			L
19R 7	0001-0002.687	R-METALL	42K2 1% 0207	TK 50 56	1	DRALORIC			L
19R 10	0001-0007.116	R-KOHLE	47K 5% 0207	56	1	018/03/01			L
19R 11	0001-0002.771	R-METALL	52K3 1% 0207	TK 50 56	1	DRALORIC			L
19R 13	0001-0006.913	R-KOHLE	1K 5% 0207	56	1	DRALORIC			L
19R 14	0001-0006.913	R-KOHLE	1K 5% 0207	56	1	DRALORIC			L
19R 15	0001-0007.158	R-KOHLE	100K 5% 0207	56	1	018/03/01			L
19R 16	0001-0007.158	R-KOHLE	100K 5% 0207	56	1	018/03/01			L
19R 17	0001-0007.158	R-KOHLE	100K 5% 0207	56	1	018/03/01			L
19R 18	0001-0007.158	R-KOHLE	100K 5% 0207	56	1	018/03/01			L
19R 19	0001-0006.913	R-KOHLE	1K 5% 0207	56	1	DRALORIC			L
19R 20	0001-0007.158	R-KOHLE	100K 5% 0207	56	1	018/03/01			L
19R 21	0001-0002.137	R-METALL	10K 1% 0207	TK 50 56	1	DRALORIC			L
19R 22	0001-0007.158	R-KOHLE	100K 5% 0207	56	1	018/03/01			L
19R 23	0001-0007.158	R-KOHLE	100K 5% 0207	56	1	018/03/01			L
19R 24	0001-0006.913	R-KOHLE	1K 5% 0207	56	1	DRALORIC			L
19R 25	0001-0007.158	R-KOHLE	100K 5% 0207	56	1	018/03/01			L
19R 26	0001-0007.158	R-KOHLE	100K 5% 0207	56	1	018/03/01			L
19R 27	0001-0002.564	R-METALL	30K1 1% 0207	TK 50 56	1	DRALORIC			L
19R 28	0001-0002.564	R-METALL	30K1 1% 0207	TK 50 56	1	DRALORIC			L
19R 29	0001-0006.913	R-KOHLE	1K 5% 0207	56	1	DRALORIC			L
19R 30	0001-0006.670	R-KOHLE	18R 5% 0207	56	1	DRALORIC			L
19R 31	0001-0006.719	R-KOHLE	39R 5% 0207	56	1	DRALORIC			L

SERIE M 0955-8401.000 SPM-15 955/01 AUSF:

TEILE-NR PART NO	SACH-NR ITEM NO	BENENNUNG DESIGNATION	BEZEICHNUNG 1 MARKING 1	BEZEICHNUNG 2 MARKING 2	MG QU	WERKNORM REF.DESIG	BEMERKUNG NOTE	SERIE AF VERSION	C
19R 32	0001-0006.719	R-KOHLE	39R 5% 0207	56	1	DRALORIC			L
19R 49	0001-0002.991	R-METALL	100K 1% 0207	TK 50 56	1	DRALORIC			L
19R 50	0000-7580.662	R-MODUL	9X 1M 5% 0W1	TK250 EXB-F10E-105J	1	018/06/01			L
19R 51	0001-0002.496	R-METALL	25K5 1% 0207	TK 50 56	1	DRALORIC			L
19R 52	0001-0006.719	R-KOHLE	39R 5% 0207	56	1	DRALORIC			L
19R 53	0001-0002.137	R-METALL	10K 1% 0207	TK 50 56	1	DRALORIC			L
19R 54	0001-0006.913	R-KOHLE	1k 5% 0207	56	1	DRALORIC			L
19R 55	0001-0007.051	R-KOHLE	15k 5% 0207	56	1	DRALORIC		J-..	L
19R 56	0000-7555.228	0-OHM WIDERSTAND	0,6	100-902	1	VITROHM			S
19R 57	0000-7558.377	R-METALL	27K 1% 0207	TK 50 56	1	DRALORIC			L
19R 58	0001-0000.472	R-METALL	82R5 1% 0207	TK 50 56	1	DRALORIC			L
19R 59	0001-0000.472	R-METALL	82R5 1% 0207	TK 50 56	1	DRALORIC			L
19R 60	0000-7555.228	0-OHM WIDERSTAND	0,6	100-902	1	VITROHM			S
19R 61	0000-7558.377	R-METALL	27K 1% 0207	TK 50 56	1	DRALORIC			L
19R 65	0001-0007.213	R-KOHLE	330K 5% 0207	56	1	018/03/01		J-..	L
19R 66	0001-0007.093	R-KOHLE	33k 5% 0207	56	1	018/03/01		J-..	L
19S 1	0000-7567.999	S-DUAL-IN-LINE	1 100 AU SCHIEBE-	09 10000 39	1	013/06/06		E-..	L
19T 1	0001-0016.550	TRANS SI PNP	BCY 78 X (D) A TO 18		1	MOT			L
20C 1	0001-0004.782	C-KERAMIK EDPT	3N9 10% 63V	R 2000 2 56	1	110/02/10			L
20C 2	0001-0004.821	C-KERAMIK EDPT	22N 20/ 80 40V	R10000 2 56	1	110/02/10			L
20C 10	0001-0041.842	ELKO-AL	220U 10/ 50 16V	B41588 56	1	110/05/40			L
20C 11	0001-0041.842	ELKO-AL	220U 10/ 50 16V	B41588 56	1	110/05/40			L
20C 12	0001-0004.821	C-KERAMIK EDPT	22N 20/ 80 40V	R10000 2 56	1	110/02/10			L
20C 13	0001-0004.821	C-KERAMIK EDPT	22N 20/ 80 40V	R10000 2 56	1	110/02/10			L
20C 20	0001-0004.698	C-KERAMIK EDPT	1N 10% 63V	R 2000 2 56	1	110/02/10			L
20C 101	0001-0004.818	C-KERAMIK EDPT	10N 20/100 40V	R10000 2 56	1	110/02/10			L
20C 102	0001-0004.818	C-KERAMIK EDPT	10N 20/100 40V	R10000 2 56	1	110/02/10			L
20C 103	0001-0004.818	C-KERAMIK EDPT	10N 20/100 40V	R10000 2 56	1	110/02/10			L
20GL 1	0001-0018.493	DIODE SI	1 N 4448 DO 35		1	ITT			L
20GL 2	0001-0018.493	DIODE SI	1 N 4448 DO 35		1	ITT			L
20GL 3	0001-0018.493	DIODE SI	1 N 4448 DO 35		1	ITT			L
20GL 4	0001-0018.493	DIODE SI	1 N 4448 DO 35		1	ITT			L
20GL 5	0001-0018.493	DIODE SI	1 N 4448 DO 35		1	ITT			L
20GL 6	0001-0018.493	DIODE SI	1 N 4448 DO 35		1	ITT			L
20GL 7	0001-0018.493	DIODE SI	1 N 4448 DO 35		1	ITT			L
20GL 8	0001-0018.493	DIODE SI	1 N 4448 DO 35		1	ITT			L
20GL 20	0001-0018.493	DIODE SI	1 N 4448 DO 35		1	ITT			L
20GL 21	0001-0018.493	DIODE SI	1 N 4448 DO 35		1	ITT			L
20GL 22	0001-0018.493	DIODE SI	1 N 4448 DO 35		1	ITT			L
20GL 25	0000-7536.878	LED ROT 3MM	TLHR 4403	FRUEHER: LD 30 II	1	114/03/03			L
20GL 26	0000-7618.071	LED ROT 1,8MM	TLUR 2401 M	FRUEHER: CQY 41 NB	1	TFK			L
20GL 27	0000-7618.071	LED ROT 1,8MM	TLUR 2401 M	FRUEHER: CQY 41 NB	1	TFK			L
20GL 35	0001-0018.493	DIODE SI	1 N 4448 DO 35		1	ITT			L
20GL 36	0001-0018.493	DIODE SI	1 N 4448 DO 35		1	ITT			L
20GL 37	0001-0018.493	DIODE SI	1 N 4448 DO 35		1	ITT			L
20GL 38	0001-0018.493	DIODE SI	1 N 4448 DO 35		1	ITT			L

Bei Bestellung Sach-Nr. angeben!
When ordering, quote Item No.

SERIE M 0955-8401-000 SPM-15 955/01 AUSF:

TEILE-NR PART NO	SACH-NR ITEM NO	BENENNUNG DESIGNATION	BEZEICHNUNG 1 MARKING 1	BEZEICHNUNG 2 MARKING 2	MG QU	WERKNORM REF.DESIG	BEMERKUNG NOTE	SERIE AF VERSION	C
20GL 39	0001-0018.493	DIODE SI	1 N 4448 DO 35		1	ITT			L
20GL 40	0001-0018.493	DIODE SI	1 N 4448 DO 35		1	ITT			L
20GL 41	0001-0018.493	DIODE SI	1 N 4448 DO 35		1	ITT			L
20GL 42	0001-0018.493	DIODE SI	1 N 4448 DO 35		1	ITT			L
20GL 43	0001-0018.493	DIODE SI	1 N 4448 DO 35		1	ITT			L
20GL 44	0000-7536.881	LED GRUEN 3MM	TLHG 4402	FRUEHER: LD 37 I	1	114/03/03		C-..	L
20GL 45	0000-7536.881	LED GRUEN 3MM	TLHG 4402	FRUEHER: LD 37 I	1	114/03/03		C-..	L
20GL 50	0000-7536.894	LED GELB 3MM	TLHY 4403	FRUEHER: LD 35 I	1	114/03/03			L
20GL 52	0000-7536.881	LED GRUEN 3MM	TLHG 4402	FRUEHER: LD 37 I	1	114/03/03		C-..	L
20GL 54	0000-7536.881	LED GRUEN 3MM	TLHG 4402	FRUEHER: LD 37 I	1	114/03/03		C-..	L
20GL 56	0000-7536.881	LED GRUEN 3MM	TLHG 4402	FRUEHER: LD 37 I	1	114/03/03		C-..	L
20GL 57	0000-7536.881	LED GRUEN 3MM	TLHG 4402	FRUEHER: LD 37 I	1	114/03/03		C-..	L
20GL 60	0000-7536.881	LED GRUEN 3MM	TLHG 4402	FRUEHER: LD 37 I	1	114/03/03		C-..	L
20GL 61	0000-7536.881	LED GRUEN 3MM	TLHG 4402	FRUEHER: LD 37 I	1	114/03/03		C-..	L
20GL 62	0000-7536.881	LED GRUEN 3MM	TLHG 4402	FRUEHER: LD 37 I	1	114/03/03		C-..	L
20GL 63	0000-7536.881	LED GRUEN 3MM	TLHG 4402	FRUEHER: LD 37 I	1	114/03/03		C-..	L
20GL 64	0001-0018.493	DIODE SI	1 N 4448 DO 35		1	ITT		M-..	L
20GL 65	0001-0018.493	DIODE SI	1 N 4448 DO 35		1	ITT		M-..	L
20GL 66	0000-7536.881	LED GRUEN 3MM	TLHG 4402	FRUEHER: LD 37 I	1	114/03/03		C-..	L
20GL 67	0000-7536.878	LED ROT 3MM	TLHR 4403	FRUEHER: LD 30 II	1	114/03/03		C-..	L
20GL 70	0000-7536.881	LED GRUEN 3MM	TLHG 4402	FRUEHER: LD 37 I	1	114/03/03		C-..	L
20GL 71	0000-7536.881	LED GRUEN 3MM	TLHG 4402	FRUEHER: LD 37 I	1	114/03/03		C-..	L
20GL 72	0000-7536.881	LED GRUEN 3MM	TLHG 4402	FRUEHER: LD 37 I	1	114/03/03		C-..	L
20GL 73	0000-7536.881	LED GRUEN 3MM	TLHG 4402	FRUEHER: LD 37 I	1	114/03/03		C-..	L
20GL 74	0000-7536.881	LED GRUEN 3MM	TLHG 4402	FRUEHER: LD 37 I	1	114/03/03		C-..	L
20GL 75	0000-7536.881	LED GRUEN 3MM	TLHG 4402	FRUEHER: LD 37 I	1	114/03/03		C-..	L
20GL 76	0000-7536.881	LED GRUEN 3MM	TLHG 4402	FRUEHER: LD 37 I	1	114/03/03		C-..	L
20GL 77	0000-7536.878	LED ROT 3MM	TLHR 4403	FRUEHER: LD 30 II	1	114/03/03		C-..	L
20GL 80	0000-7536.881	LED GRUEN 3MM	TLHG 4402	FRUEHER: LD 37 I	1	114/03/03		C-..	L
20GL 81	0000-7536.881	LED GRUEN 3MM	TLHG 4402	FRUEHER: LD 37 I	1	114/03/03		C-..	L
20GL 82	0000-7536.881	LED GRUEN 3MM	TLHG 4402	FRUEHER: LD 37 I	1	114/03/03		C-..	L
20GL 83	0000-7536.881	LED GRUEN 3MM	TLHG 4402	FRUEHER: LD 37 I	1	114/03/03		C-..	L
20GL 84	0000-7536.881	LED GRUEN 3MM	TLHG 4402	FRUEHER: LD 37 I	1	114/03/03		C-..	L
20GL 85	0000-7536.881	LED GRUEN 3MM	TLHG 4402	FRUEHER: LD 37 I	1	114/03/03		C-..	L
20GL 86	0000-7536.881	LED GRUEN 3MM	TLHG 4402	FRUEHER: LD 37 I	1	114/03/03		C-..	L
20GL 87	0000-7536.878	LED ROT 3MM	TLHR 4403	FRUEHER: LD 30 II	1	114/03/03		C-..	L
20GL 90	0000-7536.881	LED GRUEN 3MM	TLHG 4402	FRUEHER: LD 37 I	1	114/03/03		C-..	L
20GL 91	0000-7536.881	LED GRUEN 3MM	TLHG 4402	FRUEHER: LD 37 I	1	114/03/03		C-..	L
20GL 92	0000-7536.881	LED GRUEN 3MM	TLHG 4402	FRUEHER: LD 37 I	1	114/03/03		C-..	L
20GL 93	0000-7536.881	LED GRUEN 3MM	TLHG 4402	FRUEHER: LD 37 I	1	114/03/03		C-..	L
20GL 94	0000-7536.881	LED GRUEN 3MM	TLHG 4402	FRUEHER: LD 37 I	1	114/03/03		C-..	L
20GL 95	0000-7536.881	LED GRUEN 3MM	TLHG 4402	FRUEHER: LD 37 I	1	114/03/03		C-..	L
20GL 96	0000-7536.881	LED GRUEN 3MM	TLHG 4402	FRUEHER: LD 37 I	1	114/03/03		C-..	L
20GL 97	0000-7536.881	LED GRUEN 3MM	TLHG 4402	FRUEHER: LD 37 I	1	114/03/03		C-..	L
20GL 100	0000-7614.910	LED IR	LD 261 IV		1	SIEMENS		H-..	L
20GL 101	0000-7614.910	LED IR	LD 261 IV		1	SIEMENS		H-..	L
20GL 102	0000-7614.910	LED IR	LD 261 IV		1	SIEMENS		H-..	L
20GL 105	0001-0018.493	DIODE SI	1 N 4448 DO 35		1	ITT			L
20GL 106	0001-0018.493	DIODE SI	1 N 4448 DO 35		1	ITT			L
20GL 107	0001-0018.493	DIODE SI	1 N 4448 DO 35		1	ITT			L

SERIE N 0955-8401.000 SPM-15 955/01 AUSF:

TEILE-NR PART NO	SACH-NR ITEM NO	BENENNUNG DESIGNATION	BEZEICHNUNG 1 MARKING 1	BEZEICHNUNG 2 MARKING 2	MG QU	WERKNORM REF.DESIG	BEMERKUNG NOTE	SERIE AF VERSION	C
20IC 1	0001-0067.567	IC-CMOS	4028BCP DIP 16	MOS	1	MOTOROLA			L
20IC 2	0001-0015.988	IC-CMOS	4011BCP DIP 14	MOS	1	MOTOROLA			L
20IC 3	0001-0068.197	IC CMOS	4049UBCP DIP 16	MOS	1	MOTOROLA			L
20IC 4	0001-0070.884	IC-CMOS	4081BCP DIP 14	MOS	1	MOTOROLA			L
20IC 5	0001-0061.987	IC-CMOS	4042BCP DIP 16	MOS	1	MOTOROLA			L
20IC 10	0001-0015.991	IC-CMOS	4013BCP DIP 14	MOS	1	MOTOROLA			L
20IC 11	0001-0015.991	IC-CMOS	4013BCP DIP 14	MOS	1	MOTOROLA			L
20IC 12	0001-0070.910	IC-CMOS	4072BCP DIP 14	MOS	1	MOTOROLA			L
20IC 13	0000-7548.853	IC-CMOS	4503BCP DIP 16	MOS	1	MOTOROLA			L
20IC 14	0000-7548.853	IC-CMOS	4503BCP DIP 16	MOS	1	MOTOROLA			L
20IC 15	0001-0070.457	IC-CMOS	4514BCP DIP 24	MOS	1	MOTOROLA			L
20IC 20	0001-0015.991	IC-CMOS	4013BCP DIP 14	MOS	1	MOTOROLA			L
20IC 21	0001-0016.178	IC-CMOS	4518BCP DIP 16	MOS	1	MOTOROLA			L
20IC 22	0001-0068.540	IC-CMOS	4572UBCP DIP 16	MOS	1	MOTOROLA			L
20IC 23	0001-0065.475	IC-CMOS	4012BCP DIP 14	MOS	1	MOTOROLA			L
20IC 24	0000-7580.918	IC-LOCMOS	40373BP DIP 20	858521	1	VALVO			L
20IC 25	0001-0067.431	IC-CMOS	4047BE DIP 14	MOS	1	RCA			L
20IC 26	0001-0068.469	IC-CMOS	4020BCP DIP 16	MOS	1	MOTOROLA			L
20IC 50	0000-7599.530	IC-DARLINGTON ARRAY	ULN-2003ANS11 DIP 16		1	TEXAS			L
20IC 51	0001-0068.540	IC-CMOS	4572UBCP DIP 16	MOS	1	MOTOROLA			L
20IC 52	0001-0015.988	IC-CMOS	4011BCP DIP 14	MOS	1	MOTOROLA			L
20IC 53	0000-7579.107	IC-QUAD OPVERST. FET	TL064CN DIP 14		1	TEXAS			L
20IC 54	0000-7579.107	IC-QUAD OPVERST. FET	TL064CN DIP 14		1	TEXAS			L
20IC 55	0000-7580.109	IC-OP.-VERST. FET	TL061CP DIP 8		1	TEXAS			L
20IC 60	0001-0070.965	IC-CMOS	4056BE DIP 16	MOS	1	RCA			L
20IC 61	0000-7548.853	IC-CMOS	4503BCP DIP 16	MOS	1	MOTOROLA			L
20IC 62	0001-0070.884	IC-CMOS	4081BCP DIP 14	MOS	1	MOTOROLA			L
20IC 63	0000-7548.853	IC-CMOS	4503BCP DIP 16	MOS	1	MOTOROLA			L
20IC 64	0000-7576.935	IC-DUAL OPVERST. FET	TL062CP DIP 8		1	TEXAS			L
20IC 65	0000-7599.530	IC-DARLINGTON ARRAY	ULN-2003ANS11 DIP 16		1	TEXAS			L
20IC 66	0000-7599.530	IC-DARLINGTON ARRAY	ULN-2003ANS11 DIP 16		1	TEXAS			L
20IC 70	0000-7524.848	ANZEIGE 7-SEGM. LED	MAN 3640AF DIP 14		1	114/03/01			L
20IC 71	0000-7524.848	ANZEIGE 7-SEGM. LED	MAN 3640AF DIP 14		1	114/03/01			L
20IC 72	0000-7524.848	ANZEIGE 7-SEGM. LED	MAN 3640AF DIP 14		1	114/03/01			L
20IC 73	0000-7524.848	ANZEIGE 7-SEGM. LED	MAN 3640AF DIP 14		1	114/03/01			L
20IC 74	0000-7524.848	ANZEIGE 7-SEGM. LED	MAN 3640AF DIP 14		1	114/03/01			L
20IC 75	0000-7524.848	ANZEIGE 7-SEGM. LED	MAN 3640AF DIP 14		1	114/03/01			L
20IC 76	0000-7524.848	ANZEIGE 7-SEGM. LED	MAN 3640AF DIP 14		1	114/03/01			L
20IC 80	0000-7607.066	ANZEIGE 7-SEGM. LED	D 191 PK-K QIP 10		1	TFK			L
20IC 81	0000-7607.053	ANZEIGE 7-SEGM. LED	D 101 PK-K QIP 10		1	TFK			L
20IC 82	0000-7607.053	ANZEIGE 7-SEGM. LED	D 101 PK-K QIP 10		1	TFK			L
20IC 83	0000-7607.053	ANZEIGE 7-SEGM. LED	D 101 PK-K QIP 10		1	TFK			L
20IC 84	0000-7607.053	ANZEIGE 7-SEGM. LED	D 101 PK-K QIP 10		1	TFK			L
20IC 100	0001-0071.003	IC-CMOS	4584BCP DIP 14	MOS	1	MOTOROLA			L
20IC 101	0001-0070.813	IC-CMOS	4044BCP DIP 16	MOS	1	MOTOROLA			L
20IC 102	0001-0016.026	IC-CMOS	4023BCP DIP 14	MOS	1	MOTOROLA			L
20L 2	0000-7619.261	L-FUNKENTSTOER	40U 20% B82111-E-C23	90 OR18 2A	1	SIEMENS			L
20MO 1	0864-7004.814	MOTOR VORM			1			..- N	A

Bei Bestellung Sach-Nr. angeben!
When ordering, quote Item No.

SERIE M 0955-8401.000 SPM-15 955/01 AUSF:

TEILE-NR PART NO	SACH-NR ITEM NO	BENENNUNG DESIGNATION	BEZEICHNUNG 1 MARKING 1			BEZEICHNUNG 2 MARKING 2	MG QU	WERKNORM REF.DESIG	BEMERKUNG NOTE	SERIE AF VERSION	C
20R 1	0000-7541.494	R-MODUL	9X100K	5% 0W1		TK250 EXB-F10E-104J	1	018/06/01			L
20R 2	0000-7541.494	R-MODUL	9X100K	5% 0W1		TK250 EXB-F10E-104J	1	018/06/01			L
20R 3	0001-0007.035	R-KOHLE	10K	5%	0207	56	1	DRALORIC			L
20R 4	0000-7541.436	R-MODUL	9X 10K	5% 0W1		TK250 EXB-F10E-103J	1	018/06/01			L
20R 5	0001-0006.557	R-KOHLE	1R	5%	0207	56	1	DRALORIC			L
20R 6	0001-0006.913	R-KOHLE	1K	5%	0207	56	1	DRALORIC			L
20R 9	0001-0003.217	R-METALL	221K	1%	0207	TK 50 56	1	DRALORIC			L
20R 10	0001-0016.783	R-METALL	5R11	1%	0207	TK 50 56	1	DRALORIC			L
20R 11	0001-0002.755	R-METALL	49K9	1%	0207	TK 50 56	1	DRALORIC			L
20R 12	0001-0002.755	R-METALL	49K9	1%	0207	TK 50 56	1	DRALORIC			L
20R 13	0001-0001.219	R-METALL	1K	1%	0207	TK 50 56	1	DRALORIC			L
20R 15	0001-0016.783	R-METALL	5R11	1%	0207	TK 50 56	1	DRALORIC			L
20R 16	0001-0002.755	R-METALL	49K9	1%	0207	TK 50 56	1	DRALORIC			L
20R 17	0001-0002.755	R-METALL	49K9	1%	0207	TK 50 56	1	DRALORIC			L
20R 18	0001-0001.219	R-METALL	1K	1%	0207	TK 50 56	1	DRALORIC			L
20R 20	0001-0016.783	R-METALL	5R11	1%	0207	TK 50 56	1	DRALORIC			L
20R 21	0001-0002.755	R-METALL	49K9	1%	0207	TK 50 56	1	DRALORIC			L
20R 22	0001-0002.755	R-METALL	49K9	1%	0207	TK 50 56	1	DRALORIC			L
20R 23	0001-0001.219	R-METALL	1K	1%	0207	TK 50 56	1	DRALORIC			L
20R 25	0001-0016.783	R-METALL	5R11	1%	0207	TK 50 56	1	DRALORIC			L
20R 26	0001-0002.755	R-METALL	49K9	1%	0207	TK 50 56	1	DRALORIC			L
20R 27	0001-0002.755	R-METALL	49K9	1%	0207	TK 50 56	1	DRALORIC			L
20R 28	0001-0001.219	R-METALL	1K	1%	0207	TK 50 56	1	DRALORIC			L
20R 30	0001-0016.783	R-METALL	5R11	1%	0207	TK 50 56	1	DRALORIC			L
20R 31	0001-0002.755	R-METALL	49K9	1%	0207	TK 50 56	1	DRALORIC			L
20R 32	0001-0002.755	R-METALL	49K9	1%	0207	TK 50 56	1	DRALORIC			L
20R 33	0001-0001.219	R-METALL	1K	1%	0207	TK 50 56	1	DRALORIC			L
20R 35	0001-0016.783	R-METALL	5R11	1%	0207	TK 50 56	1	DRALORIC			L
20R 36	0001-0002.755	R-METALL	49K9	1%	0207	TK 50 56	1	DRALORIC			L
20R 37	0001-0002.755	R-METALL	49K9	1%	0207	TK 50 56	1	DRALORIC			L
20R 38	0001-0001.219	R-METALL	1K	1%	0207	TK 50 56	1	DRALORIC			L
20R 40	0001-0016.783	R-METALL	5R11	1%	0207	TK 50 56	1	DRALORIC			L
20R 41	0001-0002.755	R-METALL	49K9	1%	0207	TK 50 56	1	DRALORIC			L
20R 42	0001-0002.755	R-METALL	49K9	1%	0207	TK 50 56	1	DRALORIC			L
20R 43	0001-0001.219	R-METALL	1K	1%	0207	TK 50 56	1	DRALORIC			L
20R 45	0001-0016.783	R-METALL	5R11	1%	0207	TK 50 56	1	DRALORIC			L
20R 46	0001-0002.755	R-METALL	49K9	1%	0207	TK 50 56	1	DRALORIC			L
20R 47	0001-0002.755	R-METALL	49K9	1%	0207	TK 50 56	1	DRALORIC			L
20R 48	0001-0001.219	R-METALL	1K	1%	0207	TK 50 56	1	DRALORIC			L
20R 50	0001-0016.783	R-METALL	5R11	1%	0207	TK 50 56	1	DRALORIC			L
20R 51	0001-0002.755	R-METALL	49K9	1%	0207	TK 50 56	1	DRALORIC			L
20R 52	0001-0002.755	R-METALL	49K9	1%	0207	TK 50 56	1	DRALORIC			L
20R 53	0001-0001.219	R-METALL	1K	1%	0207	TK 50 56	1	DRALORIC			L
20R 55	0001-0002.153	R-METALL	10K5	1%	0207	TK 50 56	1	DRALORIC			L
20R 56	0001-0067.457	R-METALL	374K	1%	0207	TK 50 56	1	DRALORIC			L
20R 57	0001-0002.137	R-METALL	10K	1%	0207	TK 50 56	1	DRALORIC			L
20R 58	0001-0002.111	R-METALL	9K53	1%	0207	TK 50 56	1	DRALORIC			L
20R 59	0001-0006.913	R-KOHLE	1K	5%	0207	56	1	DRALORIC			L
20R 65	0001-0002.991	R-METALL	100K	1%	0207	TK 50 56	1	DRALORIC			L
20R 66	0001-0002.991	R-METALL	100K	1%	0207	TK 50 56	1	DRALORIC			L
20R 67	0001-0002.991	R-METALL	100K	1%	0207	TK 50 56	1	DRALORIC			L

Bei Bestellung Sach-Nr. angeben!
When ordering, quote Item No.

SERIE M 0955-8401.000 SPM-15 955/01 AUSF:

TEILE-NR PART NO	SACH-NR ITEM NO	BENENNUNG DESIGNATION	BEZEICHNUNG 1 MARKING 1	BEZEICHNUNG 2 MARKING 2	MG QU	WERKNORM REF.DESIG	BEMERKUNG NOTE	SERIE AF VERSION	C
20R 68	0001-0002.991	R-METALL	100K 1% 0207	TK 50 56	1	DRALORIC			L
20R 69	0001-0002.991	R-METALL	100K 1% 0207	TK 50 56	1	DRALORIC			L
20R 70	0001-0002.991	R-METALL	100K 1% 0207	TK 50 56	1	DRALORIC			L
20R 71	0001-0002.991	R-METALL	100K 1% 0207	TK 50 56	1	DRALORIC			L
20R 72	0001-0002.991	R-METALL	100K 1% 0207	TK 50 56	1	DRALORIC			L
20R 73	0001-0002.991	R-METALL	100K 1% 0207	TK 50 56	1	DRALORIC			L
20R 74	0001-0002.519	R-METALL	26K7 1% 0207	TK 50 56	1	DRALORIC			L
20R 80	0001-0007.035	R-KOHLE	10K 5% 0207	56	1	DRALORIC			L
20R 81	0001-0001.921	R-METALL	6K04 1% 0207	TK 50 56	1	DRALORIC			L
20R 82	0001-0002.360	R-METALL	18K2 1% 0207	TK 50 56	1	DRALORIC			L
20R 83	0000-7586.271	R-METALL	6R81 1% 0411	TK 50 56	1	018/04/01			L
20R 90	0001-0006.641	R-KOHLE	10R 5% 0207	56	1	DRALORIC			L
20R 91	0001-0006.641	R-KOHLE	10R 5% 0207	56	1	DRALORIC			L
20R 92	0000-7541.494	R-MODUL	9X100K 5% 0W1	TK250 EXB-F10E-104J	1	018/06/01			L
20R 93	0000-7541.494	R-MODUL	9X100K 5% 0W1	TK250 EXB-F10E-104J	1	018/06/01			L
20R 95	0001-0006.557	R-KOHLE	1R 5% 0207	56	1	DRALORIC			L
20R 101	0001-0006.557	R-KOHLE	1R 5% 0207	56	1	DRALORIC			L
20R 102	0001-0007.158	R-KOHLE	100K 5% 0207	56	1	018/03/01			L
20R 105	0001-0007.129	R-KOHLE	56K 5% 0207	56	1	018/03/01			L
20R 106	0001-0007.158	R-KOHLE	100K 5% 0207	56	1	018/03/01			L
20R 107	0001-0007.129	R-KOHLE	56K 5% 0207	56	1	018/03/01			L
20R 108	0001-0007.158	R-KOHLE	100K 5% 0207	56	1	018/03/01			L
20R 109	0001-0007.129	R-KOHLE	56K 5% 0207	56	1	018/03/01			L
20R 110	0000-7519.484	R-METALL	332R 1% 0204	TK 50 56	1	DRALORIC		H-..	L
20S 1	0000-7585.133	S-SCHIEBE	2 AU 2-POL 16X 7X13	EKMF-2U AU VARIANT A	1	013/04/02			
20S 2	0001-0034.147	S-SCHIEBE	2 AU 2-POL 16X 7X11	KMF-2U AU DICHTFOLIE	1	013/04/02			L
20S 10	0000-7564.235	S-TASTE	100 AU TAST	1547-625 N.RUF	1	013/06/02			L
20S 11	0000-7564.235	S-TASTE	100 AU TAST	1547-625 N.RUF	1	013/06/02			L
20S 12	0000-7564.235	S-TASTE	100 AU TAST	1547-625 N.RUF	1	013/06/02			L
20S 13	0000-7564.235	S-TASTE	100 AU TAST	1547-625 N.RUF	1	013/06/02			L
20S 20	0000-7564.235	S-TASTE	100 AU TAST	1547-625 N.RUF	1	013/06/02			L
20S 21	0000-7564.235	S-TASTE	100 AU TAST	1547-625 N.RUF	1	013/06/02			L
20S 22	0000-7564.235	S-TASTE	100 AU TAST	1547-625 N.RUF	1	013/06/02			L
20S 23	0000-7564.235	S-TASTE	100 AU TAST	1547-625 N.RUF	1	013/06/02			L
20S 30	0000-7564.235	S-TASTE	100 AU TAST	1547-625 N.RUF	1	013/06/02			L
20S 31	0000-7564.235	S-TASTE	100 AU TAST	1547-625 N.RUF	1	013/06/02			L
20S 32	0000-7564.235	S-TASTE	100 AU TAST	1547-625 N.RUF	1	013/06/02			L
20S 40	0000-7564.235	S-TASTE	100 AU TAST	1547-625 N.RUF	1	013/06/02			L
20S 41	0000-7564.235	S-TASTE	100 AU TAST	1547-625 N.RUF	1	013/06/02			L
20S 42	0000-7564.235	S-TASTE	100 AU TAST	1547-625 N.RUF	1	013/06/02			L
20S 43	0000-7564.235	S-TASTE	100 AU TAST	1547-625 N.RUF	1	013/06/02			L
20S 50	0000-7564.235	S-TASTE	100 AU TAST	1547-625 N.RUF	1	013/06/02			L
20S 51	0000-7564.235	S-TASTE	100 AU TAST	1547-625 N.RUF	1	013/06/02			L
20S 52	0000-7564.235	S-TASTE	100 AU TAST	1547-625 N.RUF	1	013/06/02			L
20S 53	0000-7564.235	S-TASTE	100 AU TAST	1547-625 N.RUF	1	013/06/02			L
20S 60	0000-7564.235	S-TASTE	100 AU TAST	1547-625 N.RUF	1	013/06/02			L
20S 61	0000-7564.235	S-TASTE	100 AU TAST	1547-625 N.RUF	1	013/06/02			L
20S 62	0000-7564.235	S-TASTE	100 AU TAST	1547-625 N.RUF	1	013/06/02			L
20S 70	0000-7564.235	S-TASTE	100 AU TAST	1547-625 N.RUF	1	013/06/02			L

Bei Bestellung Sach-Nr. angeben!
When ordering, quote Item No.

S C H A L T T E I L L I S T E / P A R T - L I S T

SERIE M 0955-8401.000 SPM-15 955/01 AUSF:

TEILE-NR PART NO	SACH-NR ITEM NO	BENENNUNG DESIGNATION	BEZEICHNUNG 1 MARKING 1	BEZEICHNUNG 2 MARKING 2	MG QU	WERKNORM REF.DESIG	BEMERKUNG NOTE	SERIE AF VERSION	C
20T 1	0001-0016.550	TRANS SI PNP	BCY 78 X (D) A TO 18		1	MOT			L
20T 2	0001-0016.550	TRANS SI PNP	BCY 78 X (D) A TO 18		1	MOT			L
20T 3	0001-0016.550	TRANS SI PNP	BCY 78 X (D) A TO 18		1	MOT			L
20T 4	0001-0016.550	TRANS SI PNP	BCY 78 X (D) A TO 18		1	MOT			L
20T 5	0001-0016.550	TRANS SI PNP	BCY 78 X (D) A TO 18		1	MOT			L
20T 6	0001-0016.550	TRANS SI PNP	BCY 78 X (D) A TO 18		1	MOT			L
20T 7	0001-0016.550	TRANS SI PNP	BCY 78 X (D) A TO 18		1	MOT			L
20T 8	0001-0016.550	TRANS SI PNP	BCY 78 X (D) A TO 18		1	MOT			L
20T 9	0001-0016.550	TRANS SI PNP	BCY 78 X (D) A TO 18		1	MOT			L
20T 15	0000-7598.971	TRANS SI P DMOS	BS 250 G TO 92		1	ITT			L
20T 16	0000-7619.287	TRANS SI N VMOS	BS 170 G TO 92	MOS	1	ITT			L
20T 17	0000-7570.669	TRANS SI NPN DARLING	BD 775 A TO 126		1	MOTOROLA			L
20T 100	0000-7614.923	TRANS SI FOTO-	BPX 81 IV		1	SIEMENS			L
20T 101	0000-7614.923	TRANS SI FOTO-	BPX 81 IV		1	SIEMENS			L
20T 102	0000-7614.923	TRANS SI FOTO-	BPX 81 IV		1	SIEMENS			L
21C 1	0001-0004.795	C-KERAMIK EDPT	4N7 10% 63V	R 2000 2 56	1	110/02/10		M-..	L
21C 2	0001-0010.417	C-KF MKT	220N 20% 100V	MKT1822 56	1	110/03/07		M-..	L
21C 3	0001-0010.417	C-KF MKT	220N 20% 100V	MKT1822 56	1	110/03/07		M-..	L
21C 4	0001-0004.795	C-KERAMIK EDPT	4N7 10% 63V	R 2000 2 56	1	110/02/10		M-..	L
21C 6	0001-0041.790	ELKO-AL	100U 10/ 50 16V	B41588 56	1	110/05/40		M-..	L
21C 7	0001-0040.720	ELKO-TA SINT FEST	1U5 20% 25V	ETR-1 56	1	110/05/61		M-..	L
21C 8	0001-0041.790	ELKO-AL	100U 10/ 50 16V	B41588 56	1	110/05/40		M-..	L
21C 9	0001-0004.821	C-KERAMIK EDPT	22N 20/ 80 40V	R10000 2 56	1	110/02/10		M-..	L
21C 10	0001-0004.795	C-KERAMIK EDPT	4N7 10% 63V	R 2000 2 56	1	110/02/10		M-..	L
21C 11	0001-0004.795	C-KERAMIK EDPT	4N7 10% 63V	R 2000 2 56	1	110/02/10		M-..	L
21C 12	0001-0004.821	C-KERAMIK EDPT	22N 20/ 80 40V	R10000 2 56	1	110/02/10		M-..	L
21C 13	0001-0004.821	C-KERAMIK EDPT	22N 20/ 80 40V	R10000 2 56	1	110/02/10		M-..	L
21C 14	0000-7604.056	ELKO-AL	10U 20% 25V	SAL-RP 56	1	VALVO		M-..	L
21C 15	0001-0004.821	C-KERAMIK EDPT	22N 20/ 80 40V	R10000 2 56	1	110/02/10		M-..	L
21C 16	0001-0004.821	C-KERAMIK EDPT	22N 20/ 80 40V	R10000 2 56	1	110/02/10		M-..	L
21C 18	0001-0004.821	C-KERAMIK EDPT	22N 20/ 80 40V	R10000 2 56	1	110/02/10		M-..	L
21C 19	0001-0004.821	C-KERAMIK EDPT	22N 20/ 80 40V	R10000 2 56	1	110/02/10		M-..	L
21C 20	0001-0004.821	C-KERAMIK EDPT	22N 20/ 80 40V	R10000 2 56	1	110/02/10		M-..	L
21C 21	0001-0004.821	C-KERAMIK EDPT	22N 20/ 80 40V	R10000 2 56	1	110/02/10		M-..	L
21C 22	0001-0004.821	C-KERAMIK EDPT	22N 20/ 80 40V	R10000 2 56	1	110/02/10		M-..	L
21C 23	0001-0004.821	C-KERAMIK EDPT	22N 20/ 80 40V	R10000 2 56	1	110/02/10		M-..	L
21C 24	0001-0004.821	C-KERAMIK EDPT	22N 20/ 80 40V	R10000 2 56	1	110/02/10		M-..	L
21C 25	0001-0004.821	C-KERAMIK EDPT	22N 20/ 80 40V	R10000 2 56	1	110/02/10		M-..	L
21C 26	0001-0004.821	C-KERAMIK EDPT	22N 20/ 80 40V	R10000 2 56	1	110/02/10		M-..	L
21C 27	0001-0004.821	C-KERAMIK EDPT	22N 20/ 80 40V	R10000 2 56	1	110/02/10		M-..	L
21C 28	0001-0004.821	C-KERAMIK EDPT	22N 20/ 80 40V	R10000 2 56	1	110/02/10		M-..	L
21C 29	0001-0004.821	C-KERAMIK EDPT	22N 20/ 80 40V	R10000 2 56	1	110/02/10		M-..	L
21C 30	0001-0004.821	C-KERAMIK EDPT	22N 20/ 80 40V	R10000 2 56	1	110/02/10		M-..	L
21C 31	0001-0004.821	C-KERAMIK EDPT	22N 20/ 80 40V	R10000 2 56	1	110/02/10		M-..	L
21C 32	0001-0004.821	C-KERAMIK EDPT	22N 20/ 80 40V	R10000 2 56	1	110/02/10		M-..	L
21C 33	0001-0004.821	C-KERAMIK EDPT	22N 20/ 80 40V	R10000 2 56	1	110/02/10		M-..	L
21C 34	0001-0004.821	C-KERAMIK EDPT	22N 20/ 80 40V	R10000 2 56	1	110/02/10		M-..	L
21C 35	0001-0004.795	C-KERAMIK EDPT	4N7 10% 63V	R 2000 2 56	1	110/02/10		M-..	L
21C 36	0001-0004.177	C-KERAMIK EDPT	10P 2% 63V	NP 0 1B 56	1	110/02/09		M-..	L

Bei Bestellung Sach-Nr. angeben!
When ordering, quote Item No.

SERIE M 0955-8401.000 SPM-15 955/01 AUSF:

TEILE-NR PART NO	SACH-NR ITEM NO	BENENNUNG DESIGNATION	BEZEICHNUNG 1 MARKING 1		BEZEICHNUNG 2 MARKING 2		MG QU	WERKNORM REF.DESIG	BEMERKUNG NOTE	SERIE AF VERSION	C
21C 37	0001-0004.177	C-KERAMIK EDPT	10P 2% 63V		NP 0 1B 56		1	110/02/09		M-..	L
21C 39	0001-0041.716	ELKO-AL	22U 10/ 50 40V		B41588 56		1	110/05/40		M-..	L
21GL 1	0001-0018.228	DIODE SI SCHOTTKY-	HP 5082-2800	DO 35	= 1N5711		1	HPA		M-..	L
21GL 2	0001-0018.493	DIODE SI	1 N 4448	DO 35			1	ITT		M-..	L
21GL 3	0001-0018.493	DIODE SI	1 N 4448	DO 35			1	ITT		M-..	L
21GL 4	0001-0018.480	GLEICHR SI	1 N 4007	P 1			1	ITT		M-..	L
21GL 5	0001-0019.094	DIODE SI Z-	ZPD 10	DO 35			1	ITT		M-..	L
21GL 7	0001-0018.493	DIODE SI	1 N 4448	DO 35			1	ITT		M-..	L
21GL 8	0001-0018.930	DIODE SI Z-	ZPD 6,8	DO 35			1	ITT		M-..	L
21GL 9	0000-7619.355	DIODE SI Z-	ZPD 5,6	DO 35	5,6 V 2% BEI	5 MA	1	ITT		M-..	L
21GL 10	0001-0018.493	DIODE SI	1 N 4448	DO 35			1	ITT		M-..	L
21GL 11	0001-0018.493	DIODE SI	1 N 4448	DO 35			1	ITT		M-..	L
21GL 13	0001-0019.094	DIODE SI Z-	ZPD 10	DO 35			1	ITT		M-..	L
21GL 14	0001-0018.493	DIODE SI	1 N 4448	DO 35			1	ITT		M-..	L
21GL 15	0001-0018.493	DIODE SI	1 N 4448	DO 35			1	ITT		M-..	L
21IC 1	0001-0070.444	IC-CMOS	4556BCP	DIP 16		MOS	1	MOTOROLA		M-..	L
21IC 2	0000-7529.584	IC-CMOS	CDP1824E	DIP 18		MOS	1	RCA		M-..	L
21IC 3	0001-0068.197	IC CMOS	4049UBCP	DIP 16		MOS	1	MOTOROLA		M-..	L
21IC 4	0000-7569.450	IC-CMOS	4504BCP	DIP 16		MOS	1	MOTOROLA		M-..	L
21IC 5	0000-7569.450	IC-CMOS	4504BCP	DIP 16		MOS	1	MOTOROLA		M-..	L
21IC 9	0000-7623.192	IC-HCMOS	74HCT244N	DIP 20		858521	1	MOTOROLA		M-..	L
21IC 10	0000-7583.889	IC-CMOS	40116E	DIP 22		MOS	1	RCA		M-..	L
21IC 13	0001-0071.951	IC-TTL	74LS368AN	DIP 16			1	TEXAS		M-..	L
21IC 14	0000-7623.192	IC-HCMOS	74HCT244N	DIP 20		858521	1	MOTOROLA		M-..	L
21IC 15	0000-7580.992	IC-CMOS	HM6116LP-3	DIC 24		MOS	1	HITACHI		M-..	L
21IC 16	0955-9316.026	IC-CMOS	UPD 27C256D-20	DIP 28		MOS	1			M-..	A
21IC 17	0955-9315.027	IC-CMOS	UPD 27C256D-20	DIP 28		MOS	1			M-..	A
21IC 18	0000-7626.458	IC-HCMOS	74HCT138N	DIP 16		858521	1	MOTOROLA		M-..	L
21IC 19	0000-7626.458	IC-HCMOS	74HCT138N	DIP 16		858521	1	MOTOROLA		M-..	L
21IC 20	0000-7623.163	IC-HCMOS	74HCT373N	DIP 20		858521	1	MOTOROLA		M-..	L
21IC 21	0000-7628.469	IC-CMOS	80C85A-RS	DIC 40		MOS	1	OKI		M-..	L
21IC 23	0000-7606.342	IC-TTL	74LS393N	DIP 14	NUR MOTOROLA,FSC OD. SGS		1	MOTOROLA		M-..	L
21IC 24	0001-0067.156	IC-TTL	74LS04N	DIP 14			1	TEXAS		M-..	L
21IC 25	0001-0066.856	IC-TTL	74LS03N	DIP 14			1	TEXAS		M-..	L
21IC 26	0001-0056.837	IC-TTL	74LS74AN	DIP 14			1	TEXAS		M-..	L
21IC 27	0001-0067.169	IC-TTL	74LS08N	DIP 14			1	TEXAS		M-..	L
21IC 28	0001-0065.585	IC-TTL	74LS02N	DIP 14			1	TEXAS		M-..	L
21IC 29	0001-0015.962	IC-CMOS	4001BCP	DIP 14		MOS	1	MOTOROLA		M-..	L
21IC 30	0000-7547.265	IC-KOMPARATOR QUAD	LM339N	DIP 14			1	NSC		M-..	L
21IC 32	0000-7511.521	IC-TRANS ARRAY	CA3096AE	DIP 16			1	RCA		M-..	L
21IC 33	0000-7576.511	IC-SPGS.-REGLER	7805CT	TO 220			1	MOTOROLA		M-..	L
21IC 34	0000-7511.521	IC-TRANS ARRAY	CA3096AE	DIP 16			1	RCA		M-..	L
21IC 35	0001-0065.695	IC-TTL	74LS00N	DIP 14			1	TEXAS		M-..	L
21IC 36	0000-7604.603	IC-SPGS.-REGLER	78L05ACP	TO 92			1	MOTOROLA		M-..	L
21IC 38	0001-0067.567	IC-CMOS	4028BCP	DIP 16		MOS	1	MOTOROLA		M-..	L
21IC 39	0001-0070.884	IC-CMOS	4081BCP	DIP 14		MOS	1	MOTOROLA		M-..	L
21IC 40	0001-0068.197	IC CMOS	4049UBCP	DIP 16		MOS	1	MOTOROLA		M-..	L
21IC 41	0001-0015.991	IC-CMOS	4013BCP	DIP 14		MOS	1	MOTOROLA		M-..	L
21IC 43	0000-7580.918	IC-LOCMOS	40373EP	DIP 20		858521	1	VALVO		M-..	L

Bei Bestellung Sach-Nr. angeben!
When ordering, quote Item No.

SERIE M 0955-8401.000 SPM-15 955/01 AUSF:

TEILE-NR PART NO	SACH-NR ITEM NO	BENENNUNG DESIGNATION	BEZEICHNUNG 1 MARKING 1	BEZEICHNUNG 2 MARKING 2	MG QU	WERKNORM REF.DESIG	BEMERKUNG NOTE	SERIE AF VERSION	C
21IC 44	0000-7580.921	IC-LOCMOS	40374BP DIP 20	858521	1	VALVO		M-..	L
21IC 45	0000-7580.918	IC-LOCMOS	40373BP DIP 20	858521	1	VALVO		M-..	L
21IC 46	0000-7580.921	IC-LOCMOS	40374BP DIP 20	858521	1	VALVO		M-..	L
21IC 47	0000-7580.918	IC-LOCMOS	40373BP DIP 20	858521	1	VALVO		M-..	L
21IC 48	0000-7580.921	IC-LOCMOS	40374BP DIP 20	858521	1	VALVO		M-..	L
21IC 49	0000-7580.918	IC-LOCMOS	40373BP DIP 20	858521	1	VALVO		M-..	L
21IC 50	0000-7580.921	IC-LOCMOS	40374BP DIP 20	858521	1	VALVO		M-..	L
21L 1	0001-0042.715	L-FUNKENTSTOER	56U 20% B82111-E-C24	70 OR3 1A5	1	SIEMENS		M-..	L
21L 2	0001-0042.715	L-FUNKENTSTOER	56U 20% B82111-E-C24	70 OR3 1A5	1	SIEMENS		M-..	L
21Q 1	0955-9708.003	STEUERQUARZ	4.915,200KHZ HC18/4		1			M-..	L
21R 1	0001-0006.913	R-KOHLE	1K 5% 0207	56	1	DRALORIC		M-..	L
21R 2	0001-0006.913	R-KOHLE	1K 5% 0207	56	1	DRALORIC		M-..	L
21R 3	0001-0006.913	R-KOHLE	1K 5% 0207	56	1	DRALORIC		M-..	L
21R 4	0001-0006.913	R-KOHLE	1K 5% 0207	56	1	DRALORIC		M-..	L
21R 5	0001-0006.913	R-KOHLE	1K 5% 0207	56	1	DRALORIC		M-..	L
21R 6	0001-0006.913	R-KOHLE	1K 5% 0207	56	1	DRALORIC		M-..	L
21R 7	0001-0006.913	R-KOHLE	1K 5% 0207	56	1	DRALORIC		M-..	L
21R 8	0001-0006.913	R-KOHLE	1K 5% 0207	56	1	DRALORIC		M-..	L
21R 9	0001-0006.913	R-KOHLE	1K 5% 0207	56	1	DRALORIC		M-..	L
21R 10	0001-0006.913	R-KOHLE	1K 5% 0207	56	1	DRALORIC		M-..	L
21R 11	0001-0006.913	R-KOHLE	1K 5% 0207	56	1	DRALORIC		M-..	L
21R 12	0001-0006.913	R-KOHLE	1K 5% 0207	56	1	DRALORIC		M-..	L
21R 13	0001-0006.913	R-KOHLE	1K 5% 0207	56	1	DRALORIC		M-..	L
21R 14	0001-0006.913	R-KOHLE	1K 5% 0207	56	1	DRALORIC		M-..	L
21R 15	0001-0006.913	R-KOHLE	1K 5% 0207	56	1	DRALORIC		M-..	L
21R 16	0001-0006.913	R-KOHLE	1K 5% 0207	56	1	DRALORIC		M-..	L
21R 17	0001-0006.913	R-KOHLE	1K 5% 0207	56	1	DRALORIC		M-..	L
21R 18	0001-0006.913	R-KOHLE	1K 5% 0207	56	1	DRALORIC		M-..	L
21R 19	0001-0007.006	R-KOHLE	5K6 5% 0207	56	1	DRALORIC		M-..	L
21R 20	0001-0007.006	R-KOHLE	5K6 5% 0207	56	1	DRALORIC		M-..	L
21R 21	0001-0006.913	R-KOHLE	1K 5% 0207	56	1	DRALORIC		M-..	L
21R 22	0001-0007.006	R-KOHLE	5K6 5% 0207	56	1	DRALORIC		M-..	L
21R 23	0001-0007.006	R-KOHLE	5K6 5% 0207	56	1	DRALORIC		M-..	L
21R 24	0001-0006.913	R-KOHLE	1K 5% 0207	56	1	DRALORIC		M-..	L
21R 25	0001-0006.913	R-KOHLE	1K 5% 0207	56	1	DRALORIC		M-..	L
21R 26	0000-7554.944	R-MODUL	5X 10K 5% 0W1	TK250 EXB-F6E-103J	1	MATSUSHITA		M-..	L
21R 30	0001-0007.006	R-KOHLE	5K6 5% 0207	56	1	DRALORIC		M-..	L
21R 31	0001-0007.051	R-KOHLE	15K 5% 0207	56	1	DRALORIC		M-..	L
21R 32	0001-0007.051	R-KOHLE	15K 5% 0207	56	1	DRALORIC		M-..	L
21R 33	0001-0006.913	R-KOHLE	1K 5% 0207	56	1	DRALORIC		M-..	L
21R 34	0001-0007.093	R-KOHLE	33K 5% 0207	56	1	018/03/01		M-..	L
21R 35	0001-0007.093	R-KOHLE	33K 5% 0207	56	1	018/03/01		M-..	L
21R 36	0001-0006.955	R-KOHLE	2K2 5% 0207	56	1	DRALORIC		M-..	L
21R 37	0001-0002.496	R-METALL	25K5 1% 0207	TK 50 56	1	DRALORIC		M-..	L
21R 38	0001-0002.496	R-METALL	25K5 1% 0207	TK 50 56	1	DRALORIC		M-..	L
21R 39	0001-0002.496	R-METALL	25K5 1% 0207	TK 50 56	1	DRALORIC		M-..	L
21R 40	0001-0002.496	R-METALL	25K5 1% 0207	TK 50 56	1	DRALORIC		M-..	L
21R 41	0001-0002.247	R-METALL	13K3 1% 0207	TK 50 56	1	DRALORIC		M-..	L

Bei Bestellung Sach-Nr. angeben!
When ordering, quote Item No.

SERIE M 0955-8401.000 SPM-15 955/01 AUSF:

TEILE-NR PART NO	SACH-NR ITEM NO	BENENNUNG DESIGNATION	BEZEICHNUNG 1 MARKING 1			BEZEICHNUNG 2 MARKING 2		MG QU	WERKNORM REF.DESIG	BEMERKUNG NOTE	SERIE AF VERSION	C
21R 42	0001-0002.991	R-METALL	100K	1%	0207	TK 50	56	1	DRALORIC		M-..	L
21R 43	0001-0006.955	R-KOHLE	2K2	5%	0207		56	1	DRALORIC		M-..	L
21R 44	0001-0006.913	R-KOHLE	1K	5%	0207		56	1	DRALORIC		M-..	L
21R 45	0001-0003.343	R-METALL	475K	1%	0207	TK 50	56	1	DRALORIC		M-..	L
21R 46	0001-0007.006	R-KOHLE	5K6	5%	0207		56	1	DRALORIC		M-..	L
21R 47	0001-0007.132	R-KOHLE	68K	5%	0207		56	1	018/03/01		M-..	L
21R 48	0001-0007.035	R-KOHLE	10K	5%	0207		56	1	DRALORIC		M-..	L
21R 49	0001-0007.174	R-KOHLE	150K	5%	0207		56	1	018/03/01		M-..	L
21R 50	0001-0007.093	R-KOHLE	33K	5%	0207		56	1	018/03/01		M-..	L
21R 51	0001-0007.035	R-KOHLE	10K	5%	0207		56	1	DRALORIC		M-..	L
21R 52	0001-0002.014	R-METALL	7K5	1%	0207	TK 50	56	1	DRALORIC		M-..	L
21R 53	0001-0006.971	R-KOHLE	3K3	5%	0207		56	1	DRALORIC		M-..	L
21R 54	0001-0006.913	R-KOHLE	1K	5%	0207		56	1	DRALORIC		M-..	L
21R 55	0001-0007.022	R-KOHLE	8K2	5%	0207		56	1	DRALORIC		M-..	L
21R 56	0001-0006.900	R-KOHLE	820R	5%	0207		56	1	DRALORIC		M-..	L
21R 57	0001-0007.158	R-KOHLE	100K	5%	0207		56	1	018/03/01		M-..	L
21R 58	0001-0007.158	R-KOHLE	100K	5%	0207		56	1	018/03/01		M-..	L
21R 59	0001-0007.158	R-KOHLE	100K	5%	0207		56	1	018/03/01		M-..	L
21R 60	0001-0007.158	R-KOHLE	100K	5%	0207		56	1	018/03/01		M-..	L
21R 61	0001-0006.913	R-KOHLE	1K	5%	0207		56	1	DRALORIC		M-..	L
21R 62	0001-0007.006	R-KOHLE	5K6	5%	0207		56	1	DRALORIC		M-..	L
21R 63	0001-0007.116	R-KOHLE	47K	5%	0207		56	1	018/03/01		M-..	L
21R 64	0001-0007.116	R-KOHLE	47K	5%	0207		56	1	018/03/01		M-..	L
21R 66	0001-0006.913	R-KOHLE	1K	5%	0207		56	1	DRALORIC		M-..	L
21R 67	0001-0007.035	R-KOHLE	10K	5%	0207		56	1	DRALORIC		M-..	L
21R 68	0001-0007.158	R-KOHLE	100K	5%	0207		56	1	018/03/01		M-..	L
21R 69	0001-0007.158	R-KOHLE	100K	5%	0207		56	1	018/03/01		M-..	L
21R 70	0001-0002.991	R-METALL	100K	1%	0207	TK 50	56	1	DRALORIC		M-..	L
21R 71	0001-0001.219	R-METALL	1K	1%	0207	TK 50	56	1	DRALORIC		M-..	L
21R 73	0001-0001.219	R-METALL	1K	1%	0207	TK 50	56	1	DRALORIC		M-..	L
21R 74	0001-0000.980	R-METALL	499R	1%	0207	TK 50	56	1	DRALORIC		M-..	L
21R 75	0001-0002.409	R-METALL	20K	1%	0207	TK 50	56	1	DRALORIC		M-..	L
21R 76	0001-0001.840	R-METALL	4K99	1%	0207	TK 50	56	1	DRALORIC		M-..	L
21R 77	0001-0006.641	R-KOHLE	10R	5%	0207		56	1	DRALORIC		M-..	L
21R 78	0001-0007.035	R-KOHLE	10K	5%	0207		56	1	DRALORIC		M-..	L
21R 79	0001-0001.222	R-METALL	1K07	1%	0207	TK 50	56	1	DRALORIC		M-..	L
21R 80	0001-0001.549	R-METALL	2K49	1%	0207	TK 50	56	1	DRALORIC		M-..	L
21R 81	0001-0001.840	R-METALL	4K99	1%	0207	TK 50	56	1	DRALORIC		M-..	L
21R 82	0001-0001.840	R-METALL	4K99	1%	0207	TK 50	56	1	DRALORIC		M-..	L
21R 83	0001-0001.222	R-METALL	1K07	1%	0207	TK 50	56	1	DRALORIC		M-..	L
21R 84	0001-0001.549	R-METALL	2K49	1%	0207	TK 50	56	1	DRALORIC		M-..	L
21R 85	0001-0007.158	R-KOHLE	100K	5%	0207		56	1	018/03/01		M-..	L
21R 86	0001-0006.913	R-KOHLE	1K	5%	0207		56	1	DRALORIC		M-..	L
21R 87	0001-0006.913	R-KOHLE	1K	5%	0207		56	1	DRALORIC		M-..	L
21R 88	0001-0006.913	R-KOHLE	1K	5%	0207		56	1	DRALORIC		M-..	L
21R 89	0001-0006.913	R-KOHLE	1K	5%	0207		56	1	DRALORIC		M-..	L
21R 90	0001-0006.913	R-KOHLE	1K	5%	0207		56	1	DRALORIC		M-..	L
21R 91	0001-0006.913	R-KOHLE	1K	5%	0207		56	1	DRALORIC		M-..	L
21R 92	0001-0006.913	R-KOHLE	1K	5%	0207		56	1	DRALORIC		M-..	L
21R 93	0001-0006.913	R-KOHLE	1K	5%	0207		56	1	DRALORIC		M-..	L
21R 94	0001-0006.913	R-KOHLE	1K	5%	0207		56	1	DRALORIC		M-..	L

Bei Bestellung Sach-Nr. angeben!
When ordering, quote Item No.

SERIE N 0955-8401.000 SPM-15 955/01 AUSF:

TEILE-NR PART NO	SACH-NR ITEM NO	BENENNUNG DESIGNATION	BEZEICHNUNG 1 MARKING 1	BEZEICHNUNG 2 MARKING 2	MG QU	WERKNORM REF.DESIG	BEMERKUNG NOTE	SERIE AF VERSION	C
21R 95	0001-0002.137	R-METALL	10K 1% 0207	TK 50 56	1	DRALORIC		M-..	L
21R 96	0001-0002.409	R-METALL	20K 1% 0207	TK 50 56	1	DRALORIC		M-..	L
21R 97	0001-0002.661	R-METALL	40K2 1% 0207	TK 50 56	1	DRALORIC		M-..	L
21R 98	0001-0002.920	R-METALL	80K6 1% 0207	TK 50 56	1	DRALORIC		M-..	L
21R 99	0001-0001.840	R-METALL	4K99 1% 0207	TK 50 56	1	DRALORIC		M-..	L
21R 100	0001-0002.920	R-METALL	80K6 1% 0207	TK 50 56	1	DRALORIC		M-..	L
21R 101	0001-0006.599	R-KOHLE	3R3 5% 0207	56	1	DRALORIC		M-..	L
21R 102	0001-0006.557	R-KOHLE	1R 5% 0207	56	1	DRALORIC		M-..	L
21R 103	0001-0006.913	R-KOHLE	1K 5% 0207	56	1	DRALORIC		M-..	L
21R 104	0001-0006.913	R-KOHLE	1K 5% 0207	56	1	DRALORIC		M-..	L
21R 105	0001-0006.913	R-KOHLE	1K 5% 0207	56	1	DRALORIC		M-..	L
21R 106	0001-0006.913	R-KOHLE	1K 5% 0207	56	1	DRALORIC		M-..	L
21R 107	0001-0006.913	R-KOHLE	1K 5% 0207	56	1	DRALORIC		M-..	L
21R 108	0001-0006.913	R-KOHLE	1K 5% 0207	56	1	DRALORIC		M-..	L
21R 109	0001-0006.913	R-KOHLE	1K 5% 0207	56	1	DRALORIC		M-..	L
21R 110	0001-0006.913	R-KOHLE	1K 5% 0207	56	1	DRALORIC		M-..	L
21R 111	0001-0006.913	R-KOHLE	1K 5% 0207	56	1	DRALORIC		M-..	L
21R 112	0001-0006.913	R-KOHLE	1K 5% 0207	56	1	DRALORIC		M-..	L
21R 113	0001-0006.913	R-KOHLE	1K 5% 0207	56	1	DRALORIC		M-..	L
21R 114	0001-0006.913	R-KOHLE	1K 5% 0207	56	1	DRALORIC		M-..	L
21R 115	0001-0006.913	R-KOHLE	1K 5% 0207	56	1	DRALORIC		M-..	L
21R 116	0001-0006.913	R-KOHLE	1K 5% 0207	56	1	DRALORIC		M-..	L
21R 117	0001-0006.913	R-KOHLE	1K 5% 0207	56	1	DRALORIC		M-..	L
21R 118	0001-0006.913	R-KOHLE	1K 5% 0207	56	1	DRALORIC		M-..	L
21R 119	0001-0001.840	R-METALL	4K99 1% 0207	TK 50 56	1	DRALORIC		M-..	L
21R 120	0001-0006.913	R-KOHLE	1K 5% 0207	56	1	DRALORIC		M-..	L
21R 121	0001-0006.913	R-KOHLE	1K 5% 0207	56	1	DRALORIC		M-..	L
21R 122	0001-0006.913	R-KOHLE	1K 5% 0207	56	1	DRALORIC		M-..	L
21R 123	0001-0006.913	R-KOHLE	1K 5% 0207	56	1	DRALORIC		M-..	L
21R 124	0001-0007.080	R-KOHLE	27K 5% 0207	56	1	018/03/01		M-..	L
21R 126	0001-0006.913	R-KOHLE	1K 5% 0207	56	1	DRALORIC		M-..	L
21R 127	0000-7541.494	R-MODUL	9X100K 5% 0W1	TK250 EXB-F10E-104J	1	018/06/01		M-..	L
21R 128	0000-7592.951	R-MODUL	9X 1K 5% 0W1	TK250 EXB-F10E-102J	1	018/06/01		M-..	L
21R 129	0000-7550.650	R-MODUL	9X 15K 5% 0W1	TK250 EXB-F10E-153J	1	018/06/01		M-..	L
21R 130	0001-0007.093	R-KOHLE	33K 5% 0207	56	1	018/03/01		M-..	L
21R 131	0001-0007.093	R-KOHLE	33K 5% 0207	56	1	018/03/01		M-..	L
21R 132	0001-0006.955	R-KOHLE	2K2 5% 0207	56	1	DRALORIC		M-..	L
21R 133	0001-0006.955	R-KOHLE	2K2 5% 0207	56	1	DRALORIC		M-..	L
21R 134	0001-0006.955	R-KOHLE	2K2 5% 0207	56	1	DRALORIC		M-..	L
21R 135	0001-0007.093	R-KOHLE	33K 5% 0207	56	1	018/03/01		M-..	L
21R 136	0001-0001.125	R-METALL	750R 1% 0207	TK 50 56	1	DRALORIC		M-..	L
21R 137	0001-0001.219	R-METALL	1K 1% 0207	TK 50 56	1	DRALORIC		M-..	L
21R 139	0000-7519.536	R-METALL	100K 1% 0204	TK 50 56	1	018/04/01		M-..	L
21S 1	0000-7574.953	S-DUAL-IN-LINE	6 100 AU WIPP-	S76B06	1	013/06/05		M-..	L
21S 2	0001-0072.361	S-DUAL-IN-LINE	10 100 AU WIPP-	S76B10	1	013/06/05		M-..	L
21S 3	0000-7550.702	S-TASTE	100 AG TAST	MDP	1	ITT		M-..	L
21S 4	0000-1831.016	S-DUAL-IN-LINE	1 001 SN HAKEN-	GEK.: C42315-A1347-A212	1	SIEMENS		M-..	L
21T 1	0000-7619.287	TRANS SI N VMOS	BS 170 6 TO 92	MOS	1	ITT		M-..	L
21T 2	0000-7619.287	TRANS SI N VMOS	BS 170 6 TO 92	MOS	1	ITT		M-..	L

Bei Bestellung Sach-Nr. angeben!
When ordering, quote Item No.

SERIE M 0955-8401.000 SPM-15 955/01 AUSF:

TEILE-NR PART NO	SACH-NR ITEM NO	BENENNUNG DESIGNATION	BEZEICHNUNG 1 MARKING 1	BEZEICHNUNG 2 MARKING 2	MG QU	WERKNORM REF.DESIG	BEMERKUNG NOTE	SERIE AF VERSION	C
21T 3	0000-7610.765	TRANS SI N VMOS	BUZ 10 B TO 220	MOS	1	VAL 0983		M-..|	L
21T 4	0001-0016.550	TRANS SI PNP	BCY 78 X (D) A TO 18		1	MOT		M-..|	L
21T 5	0001-0016.712	TRANS SI PNP	2 N 4035 (BFX48) A TO 18		1	SGS		M-..|	L
21T 6	0001-0016.987	TRANS SI NPN	2 N 2369 (BSX93) A TO 18		1	FSC		M-..|	L
21T 7	0000-7619.287	TRANS SI N VMOS	BS 170 6 TO 92	MOS	1	ITT		M-..|	L
21T 8	0001-0016.712	TRANS SI PNP	2 N 4035 (BFX48) A TO 18		1	SGS		M-..|	L
21T 9	0001-0016.987	TRANS SI NPN	2 N 2369 (BSX93) A TO 18		1	FSC		M-..|	L
21T 10	0001-0016.518	TRANS SI NPN	BCY 59 X (D) A TO 18		1	TFK		M-..|	L
22C 1	0001-0010.378	C-KF MKT	100N 20% 100V	MKT1822 56	1	110/03/07			L
22C 3	0001-0041.790	ELKO-AL	100U 10/ 50 16V	B41588 56	1	110/05/40			L
22C 4	0001-0040.801	ELKO-TA SINT FEST	4U7 20% 10V	ETR-1 56	1	110/05/61			L
22C 9	0001-0040.966	ELKO-TA SINT FEST	22U 20% 16V	ETR-3 56	1	110/05/61			L
22C 10	0001-0010.080	C-KF MKT	1U 5% 100V	MKT1813 56	1	ROEDERST.			L
22C 11	0000-7541.326	C-KF KS	11N3 1% 160V	B31521 56	1	110/03/12			L
22C 12	0000-7619.258	C-GLIMMER	2N74 1% 250V	BF 53.20 56	1	110/06/01			L
22C 13	0001-0004.384	C-KERAMIK EDPT	47P 2% 63V	NP 0 1B 56	1	110/02/09			L
22C 14	0001-0040.704	ELKO-TA SINT FEST	1U 20% 35V	ETR-1 56	1	110/05/61			L
22C 15	0001-0040.966	ELKO-TA SINT FEST	22U 20% 16V	ETR-3 56	1	110/05/61			L
22C 16	0001-0004.821	C-KERAMIK EDPT	22N 20/ 80 40V	R10000 2 56	1	110/02/10			L
22C 17	0001-0004.821	C-KERAMIK EDPT	22N 20/ 80 40V	R10000 2 56	1	110/02/10			L
22C 20	0001-0040.704	ELKO-TA SINT FEST	1U 20% 35V	ETR-1 56	1	110/05/61			L
22C 21	0001-0040.704	ELKO-TA SINT FEST	1U 20% 35V	ETR-1 56	1	110/05/61			L
22C 22	0001-0010.417	C-KF MKT	220N 20% 100V	MKT1822 56	1	110/03/07			L
22FI 1	0829-9304.001	MECH.FILTER GEPAART	(1 PAAR = 2 ST)	(EK-.BV 0829-9303.002)	1				L
22IC 1	0000-7513.257	IC-OP.-VERST.	NE5534AN DIP 8	FRUEHER: TDA1034N MOS	1	VALVO			L
22L 1	0955-7826.000	SPULE			1				A
22P 1	0001-0007.543	R-TRIM DRAHT SPINDEL	5K 10% 0W7 20	TK 100	1	017/04/04			L
22R 1	0001-0003.181	R-METALL	200K 1% 0207	TK 50 56	1	DRALORIC			L
22R 2	0001-0002.687	R-METALL	42K2 1% 0207	TK 50 56	1	DRALORIC			L
22R 3	0001-0002.784	R-METALL	54K9 1% 0207	TK 50 56	1	DRALORIC			L
22R 4	0001-0002.645	R-METALL	38K3 1% 0207	TK 50 56	1	DRALORIC			L
22R 5	0001-0002.852	R-METALL	64K9 1% 0207	TK 50 56	1	DRALORIC			L
22R 6	0000-7604.195	R-METALL	30K1 1% 0204	TK 50 56	1	018/04/01			L
22P 7	0001-0006.751	R-KOHLE	68R 5% 0207	56	1	DRALORIC			L
22R 8	0001-0001.219	R-METALL	1K 1% 0207	TK 50 56	1	DRALORIC			L
22R 9	0001-0001.426	R-METALL	1K87 1% 0207	TK 50 56	1	DRALORIC			L
22R 10	0000-7559.208	R-PTC	1K 2% 0W1	TSP 102 G	1	TEXAS			L
22P 11	0001-0006.793	R-KOHLE	100R 5% 0207	56	1	DRALORIC			L
22R 12	0001-0001.840	R-METALL	4K99 1% 0207	TK 50 56	1	DRALORIC			L
22R 13	0001-0003.699	R-METALL	931R 1% 0207	TK 50 56	1	DRALORIC			L
22R 14	0000-7559.208	R-PTC	1K 2% 0W1	TSP 102 G	1	TEXAS			L
22P 15	0001-0002.234	R-METALL	12K7 1% 0207	TK 50 56	1	DRALORIC			L
22P 16	0001-0001.251	R-METALL	1K15 1% 0207	TK 50 56	1	DRALORIC			L
22R 17	0001-0001.329	R-METALL	1K37 1% 0207	TK 50 56	1	DRALORIC			L

Bei Bestellung Sach-Nr. angeben!
When ordering, quote Item No.

SERIE M 0955-8401-000 SPM-15 955/01 AUSF:

TEILE-NR PART NO	SACH-NR ITEM NO	BENENNUNG DESIGNATION	BEZEICHNUNG 1 MARKING 1	BEZEICHNUNG 2 MARKING 2	MG QU	WERKNORM REF.DESIG	BEMERKUNG NOTE	SERIE AF VERSION	C
22R 21	0001-0002.425	R-METALL	21K 1% 0207	TK 50 56	1	DRALORIC			L
22R 25	0001-0002.470	R-METALL	24K3 1% 0207	TK 50 56	1	DRALORIC			L
22R 26	0001-0000.566	R-METALL	121R 1% 0207	TK 50 56	1	DRALORIC			L
22R 27	0001-0003.356	R-METALL	499K 1% 0207	TK 50 56	1	DRALORIC			L
22R 28	0001-0003.356	R-METALL	499K 1% 0207	TK 50 56	1	DRALORIC			L
22R 29	0001-0003.026	R-METALL	107K 1% 0207	TK 50 56	1	DRALORIC			L
22R 30	0001-0006.793	R-KOHLE	100R 5% 0207	56	1	DRALORIC			L
22R 31	0001-0007.035	R-KOHLE	10K 5% 0207	56	1	DRALORIC			L
22R 32	0001-0007.158	R-KOHLE	100K 5% 0207	56	1	018/03/01			L
22R 33	0001-0007.158	R-KOHLE	100K 5% 0207	56	1	018/03/01			L
22R 34	0001-0003.181	R-METALL	200K 1% 0207	TK 50 56	1	DRALORIC			L
22R 35	0000-7555.228	0-OHM WIDERSTAND	0,6	100-902	1	VITROHM			S
22R 36	0001-0007.226	R-KOHLE	390K 5% 0207	56	1	018/03/01			L
22R 37	0001-0007.158	R-KOHLE	100K 5% 0207	56	1	018/03/01			L
22R 38	0001-0002.991	R-METALL	100K 1% 0207	TK 50 56	1	DRALORIC			L
22R 39	0001-0002.991	R-METALL	100K 1% 0207	TK 50 56	1	DRALORIC			L
22ST 1	0855-0009.003	STECKER	BN 855 A 4 KPL		1			B-..	L
22T 1	0000-7619.287	TRANS SI N VMOS	BS 170 6 TO 92	MOS	1	ITT			L
22T 2	0000-7598.971	TRANS SI P DMOS	BS 250 G TO 92		1	ITT			L
22T 3	0001-0071.993	TRANS SI NPN	BCY 59 VIII (B)A TO 18		1	TFK			L
22T 4	0001-0071.993	TRANS SI NPN	BCY 59 VIII (B)A TO 18		1	TFK			L
22T 6	0000-7619.287	TRANS SI N VMOS	BS 170 6 TO 92	MOS	1	ITT			L
22T 7	0000-7598.971	TRANS SI P DMOS	BS 250 G TO 92		1	ITT			L
22T 8	0001-0016.518	TRANS SI NPN	BCY 59 X (D) A TO 18		1	TFK			L
23BU 4	0000-1637.074	WINKELBU. 75 OHM KPL			1				L
23BU 5	0000-1637.074	WINKELBU. 75 OHM KPL			1				L
23C 22	0000-7591.622	C-KERAMIK EDPT	ABGLEICHWERT	NP 0 56	1	110/02/09		M-..	I
25BU 1	0000-3713.006	TF-BUCHSE	2+E M EB LT 4	00-3713.006/4	1	119/01/05			L
25BU 2	0000-1680.005	HF-BUCHSE,N.ISOL.	UNI 9C 75 M A	LT FL 14,0	1	119/09/04			L
51BU 2	0000-1637.074	WINKELBU. 75 OHM KPL			1				L
51BU 3	0000-7598.696	HF-BUCHSE	BNC 50 M D 5,0	CR EL 26,7 551K504-106A4	1	ROSENBERG			L

Zusätzliche Bauteile für Version 955/11
Extra components for version 955/11
Composants supplémentaires pour la version 955/11

SERIE F	0955-1100.007	UMBAUSATZ F 19" GEH. AUSF:							

BN 955/11

1BU 5	0001-0032.534	EINBAUBUCHSE	5 A4 M EL LT 3	T3363500	1	119/07/03		..-	L
1GL 21	0000-7659.085	GLEICHR SI SCHOTTKY-	BYV 19/45 TO 220	2 ANSCHL.	1	VALVO		..-	L
1GL 22	0001-0018.480	GLEICHR SI	1 N 4007 P 1		1	ITT		..-	L
1GL 23	0001-0018.480	GLEICHR SI	1 N 4007 P 1		1	ITT		..-	L
1IC 11	0000-7660.980	DC/DC-WANDLER	BSR 3015-7		1	MELCHER		..-	L

1.1	Synthesizer OD-15	BN 2011/01
1.1	Synthesizer OD-15	BN 2011/01
1.1	Synthétiseur OD-15	BN 2011/01

SERIE M 2011-8401.005 OD-15 2011/01 AUSF:

BN 2011/01

TEILE-NR PART NO	SACH-NR ITEM NO	BENENNUNG DESIGNATION	BEZEICHNUNG 1 MARKING 1	BEZEICHNUNG 2 MARKING 2	MG QU	WERKNORM REF.DESIG	BEMERKUNG NOTE	SERIE AF VERSION	C
51C 1	0001-0041.059	ELKO-TA SINT FEST	47U 20% 6V3	ETR-3 56	1	110/05/61			L
51C 2	0001-0040.966	ELKO-TA SINT FEST	22U 20% 16V	ETR-3 56	1	110/05/61			L
51C 3	0001-0004.339	C-KERAMIK EDPT	33P 2% 63V	NP 0 1B 56	1	110/02/09			L
51C 4	0001-0040.885	ELKO-TA SINT FEST	10U 20% 25V	ETR-3 56	1	110/05/61			L
51C 5	0001-0040.966	ELKO-TA SINT FEST	22U 20% 16V	ETR-3 56	1	110/05/61			L
51C 8	0001-0004.449	C-KERAMIK EDPT	68P 2% 63V	NP 0 1B 56	1	110/02/09		G-..	L
51C 20	0855-0021.007	C-KERAMIK DDMZ	4N7 20/ 80 63V	D 6000 2 04	1				L
51GL 1	0001-0019.094	DIODE SI Z-	ZPD 10 DO 35		1	ITT			L
51IC 1	0001-0065.695	IC-TTL	74LS00N DIP 14		1	TEXAS			L
51IC 2	0001-0065.682	IC-TTL	74LS90N DIP 14		1	TEXAS			L
51L 1	0001-0043.125	L-FEST	100N 10% 1025-94	38 25 650 R08 1A2	1	117/01/03			L
51P 1	0000-7571.736	R-TRIM CERMET SQUARE	2K 10% 0W2 20	TK 100 T93YA 56	1	017/04/06			L
51Q 1	2011-9301.007	QUARZOSZILLATOR	10.000,000KHZ		1				L
51R 1	0001-0001.031	R-METALL	604R 1% 0207	TK 50 56	1	DRALORIC			L
51R 2	0001-0006.609	R-KOHLE	4R7 5% 0207	56	1	DRALORIC			L
51R 3	0001-0000.676	R-METALL	200R 1% 0207	TK 50 56	1	DRALORIC			L
51R 4	0001-0006.913	R-KOHLE	1K 5% 0207	56	1	DRALORIC			L
51R 5	0001-0006.913	R-KOHLE	1K 5% 0207	56	1	DRALORIC			L
51R 6	0001-0006.913	R-KOHLE	1K 5% 0207	56	1	DRALORIC			L
51R 7	0001-0000.472	R-METALL	82R5 1% 0207	TK 50 56	1	DRALORIC			L
51R 8	0001-0001.484	R-METALL	2K15 1% 0207	TK 50 56	1	DRALORIC			L
51R 9	0001-0006.913	R-KOHLE	1K 5% 0207	56	1	DRALORIC			L
51R 10	0001-0007.035	R-KOHLE	10K 5% 0207	56	1	DRALORIC			L
51R 11	0001-0000.977	R-METALL	487R 1% 0207	TK 50 56	1	DRALORIC			L
51R 12	0001-0001.662	R-METALL	3K32 1% 0207	TK 50 56	1	DRALORIC			L
51R 13	0001-0065.200	R-METALL	27R4 1% 0207	TK 50 56	1	DRALORIC			L
51R 14	0001-0006.913	R-KOHLE	1K 5% 0207	56	1	DRALORIC			L
51R 15	0001-0000.618	R-METALL	150R 1% 0207	TK 50 56	1	DRALORIC		G-..	L
51ST 1	0855-0007.005	STECKER	BN 855 A 2 KPL		1				L
51ST 2	0855-0006.006	STECKER	BN 855 A 1 KPL		1				L
51T 1	0001-0016.712	TRANS SI PNP	2 N 4035 (BFX48) A TO 18		1	SGS			L
51T 2	0001-0016.903	TRANS SI NPN	BFY 90 A TO 72		1	SIEMENS			L
51UE 1	2011-7730.007	UEBERTRAGER			1			G-..	A
52C 1	0001-0040.966	ELKO-TA SINT FEST	22U 20% 16V	ETR-3 56	1	110/05/61			L
52C 2	0000-7551.235	C-KERAMIK KDPU	100N 20% 50V	X7R VP32BY104MA	1	110/02/15			L
52C 3	0001-0004.818	C-KERAMIK EDPT	10N 20/100 40V	R10000 2 56	1	110/02/10			L
52C 4	0001-0004.698	C-KERAMIK EDPT	1N 10% 63V	R 2000 2 56	1	110/02/10			L
52C 5	0000-7618.398	C-KERAMIK KDPU	1N5 5% 50V	COG VP32BA152JA	1	110/02/15			L
52C 7	0855-0022.006	C-KERAMIK DDMZ	4N7 20/ 80 63V	D 6000 2 04	1				L

Bei Bestellung Sach-Nr. angeben!
When ordering, quote Item No.

SERIE M 2011-8401.005 OD-15 2011/01 AUSF:

TEILE-NR PART NO		SACH-NR ITEM NO	BENENNUNG DESIGNATION	BEZEICHNUNG 1 MARKING 1			BEZEICHNUNG 2 MARKING 2		MG QU	WERKNORM REF.DESIG	BEMERKUNG NOTE	SERIE AF VERSION	C
52IC	1	0001-0016.178	IC-CMOS	4518BCP		DIP 16		MOS	1	MOTOROLA			L
52IC	2	0000-7529.416	IC-CMOS	4175BCP		DIP 16		MOS	1	MOTOROLA			L
52IC	3	0001-0015.988	IC-CMOS	4011BCP		DIP 14		MOS	1	MOTOROLA			L
52IC	4	0001-0067.431	IC-CMOS	4047BE		DIP 14		MOS	1	RCA			L
52L	1	0000-7567.737	DAEMPFUNGSPERLE	DA= 3,5	DI= 1,2	L= 3,3	B62110-A3011-X022		1	SIEMENS			L
52L	2	2011-7826.005	SPULE						1				A
52R	1	0001-0006.696	R-KOHLE	27R	5%	0207		56	1	DRALORIC			L
52R	2	0001-0006.683	R-KOHLE	22R	5%	0207		56	1	DRALORIC			L
52R	3	0001-0007.064	R-KOHLE	18K	5%	0207		56	1	DRALORIC			L
52R	4	0001-0007.064	R-KOHLE	18K	5%	0207		56	1	DRALORIC			L
52R	5	0001-0006.751	R-KOHLE	68R	5%	0207		56	1	DRALORIC			L
52R	6	0001-0007.077	R-KOHLE	22K	5%	0207		56	1	DRALORIC			L
52R	9	0001-0007.077	R-KOHLE	22K	5%	0207		56	1	DRALORIC			L
52R	10	0001-0006.968	R-KOHLE	2K7	5%	0207		56	1	DRALORIC			L
52R	11	0001-0006.751	R-KOHLE	68R	5%	0207		56	1	DRALORIC			L
52R	12	0001-0007.064	R-KOHLE	18K	5%	0207		56	1	DRALORIC			L
52R	13	0001-0007.064	R-KOHLE	18K	5%	0207		56	1	DRALORIC			L
52R	14	0001-0006.942	R-KOHLE	1K8	5%	0207		56	1	DRALORIC			L
52R	15	0001-0007.077	R-KOHLE	22K	5%	0207		56	1	DRALORIC			L
52R	16	0001-0006.447	R-METALL	14K3	1%	0207	TK 50	56	1	DRALORIC			L
52ST	1	0855-0007.005	STECKER	BN 855 A 2 KPL					1				L
52T	1	0001-0017.342	TRANS SI PNP	2 N 3251		A TO 18			1	MOTOROLA			L
52T	2	0001-0017.342	TRANS SI PNP	2 N 3251		A TO 18			1	MOTOROLA			L
52T	3	0001-0016.987	TRANS SI NPN	2 N 2369(BSX93)		A TO 18			1	FSC			L
53C	1	0001-0010.323	C-KF MKT	47N	20%	250V	MKT1822	56	1	110/03/07		B-..	L
53C	2	0001-0010.378	C-KF MKT	100N	20%	100V	MKT1822	56	1	110/03/07		B-..	L
53C	4	0001-0010.145	C-KF MKT	2U2	10%	100V	MKT1813	56	1	110/03/06		B-..	L
53C	5	0001-0040.885	ELKO-TA SINT FEST	10U	20%	25V	ETR-3	56	1	110/05/61		B-..	L
53C	6	0001-0004.818	C-KERAMIK EDPT	10N	20/100	40V	R10000 2	56	1	110/02/10		B-..	L
53C	7	0001-0004.818	C-KERAMIK EDPT	10N	20/100	40V	R10000 2	56	1	110/02/10		B-..	L
53C	8	0001-0010.378	C-KF MKT	100N	20%	100V	MKT1822	56	1	110/03/07		B-..	L
53C	9	0001-0004.818	C-KERAMIK EDPT	10N	20/100	40V	R10000 2	56	1	110/02/10		B-..	L
53C	10	0001-0004.698	C-KERAMIK EDPT	1N	10%	63V	R 2000 2	56	1	110/02/10		B-..	L
53C	11	0001-0040.966	ELKO-TA SINT FEST	22U	20%	16V	ETR-3	56	1	110/05/61		B-..	L
53C	12	0001-0010.378	C-KF MKT	100N	20%	100V	MKT1822	56	1	110/03/07		B-..	L
53C	13	0001-0041.664	ELKO-AL	10U	10/ 50	40V	B41588	56	1	110/05/40		B-..	L
53GL	1	0000-7629.497	DIODE SI C-GEPAART	BB 130		SOD 69			2	VALVO		B-..	L
53GL	2	0000-7629.497	DIODE SI C-GEPAART	BB 130		SOD 69			2	VALVO		B-..	L
53GL	3	0001-0018.228	DIODE SI SCHOTTKY-	HP 5082-2800		DO 35	= 1N5711		1	HPA		B-..	L
53GL	4	0001-0018.228	DIODE SI SCHOTTKY-	HP 5082-2800		DO 35	= 1N5711		1	HPA		B-..	L
53L	2	2011-7827.004	SPULE						1			B-..	A
53L	3	2011-7827.004	SPULE						1			B-..	A
53L	4	0000-7556.298	L-FEST	100U	10%	1025-68	45 2,5 13 8R	80MA	1	117/01/03		B-..	L

SERIE M 2011-8401.005 OD-15 2011/01 AUSF:

TEILE-NR PART NO	SACH-NR ITEM NO	BENENNUNG DESIGNATION	BEZEICHNUNG 1 MARKING 1	BEZEICHNUNG 2 MARKING 2	MG QU	WERKNORM REF.DESIG	BEMERKUNG NOTE	SERIE AF VERSION	C
53L 5	2011-7828.003	SPULE			1			B-..	A
53P 1	0001-0008.335	R-TRIM CERMET LIEG	47K 20% 0W5 1	TK 100 (ALT 17/02/08)	1	017/02/15		B-..	L
53P 2	0001-0008.364	R-TRIM CERMET LIEG	1M 20% 0W5 1	TK 100 (ALT 17/02/08)	1	017/02/15		B-..	L
53R 1	0001-0006.942	R-KOHLE	1K8 5% 0207	56	1	DRALORIC		B-..	L
53R 2	0001-0007.190	R-KOHLE	220K 5% 0207	56	1	018/03/01		B-..	L
53R 3	0001-0007.035	R-KOHLE	10K 5% 0207	56	1	DRALORIC		B-..	L
53R 4	0001-0006.793	R-KOHLE	100R 5% 0207	56	1	DRALORIC		B-..	L
53R 5	0001-0006.997	R-KOHLE	4K7 5% 0207	56	1	DRALORIC		B-..	L
53R 6	0001-0006.751	R-KOHLE	68R 5% 0207	56	1	DRALORIC		B-..	L
53R 7	0001-0006.793	R-KOHLE	100R 5% 0207	56	1	DRALORIC		B-..	L
53R 8	0001-0007.035	R-KOHLE	10K 5% 0207	56	1	DRALORIC		B-..	L
53R 9	0001-0006.793	R-KOHLE	100R 5% 0207	56	1	DRALORIC		B-..	L
53R 10	0001-0007.116	R-KOHLE	47K 5% 0207	56	1	DRALORIC		B-..	L
53R 11	0001-0007.103	R-KOHLE	39K 5% 0207	56	1	018/03/01		B-..	L
53R 12	0001-0006.913	R-KOHLE	1K 5% 0207	56	1	018/03/01		B-..	L
53R 13	0001-0007.093	R-KOHLE	33K 5% 0207	56	1	DRALORIC		B-..	L
53R 14	0001-0006.874	R-KOHLE	470R 5% 0207	56	1	018/03/01		B-..	L
53R 15	0001-0006.997	R-KOHLE	4K7 5% 0207	56	1	DRALORIC		B-..	L
53R 16	0001-0006.609	R-KOHLE	4R7 5% 0207	56	1	DRALORIC		B-..	L
53R 17	0001-0006.926	R-KOHLE	1K2 5% 0207	56	1	DRALORIC		B-..	L
53R 18	0001-0006.793	R-KOHLE	100R 5% 0207	56	1	DRALORIC		B-..	L
53T 1	0001-0016.628	TRANS SI N JFET	BF 245 A D SOT 54		1	VALVO		B-..	L
53T 2	0001-0016.628	TRANS SI N JFET	BF 245 A D SOT 54		1	VALVO		B-..	L
53T 3	0001-0016.628	TRANS SI N JFET	BF 245 A D SOT 54		1	VALVO		B-..	L
53T 4	0001-0016.518	TRANS SI NPN	BCY 59 X (D) A TO 18		1	TFK		B-..	L
53T 5	0001-0016.987	TRANS SI NPN	2 N 2369 (BSX93) A TO 18		1	FSC		B-..	L
53T 6	0001-0016.518	TRANS SI NPN	BCY 59 X (D) A TO 18		1	TFK		B-..	L
53UE 1	2011-7727.007	UEBERTRAGER			1			B-..	A
54C 1	0001-0004.698	C-KERAMIK EDPT	1N 10% 63V	R 2000 2 56	1	110/02/10			L
54C 2	0001-0040.775	ELKO-TA SINT FEST	3U3 20% 16V	ETR-1 56	1	110/05/61			L
54C 3	0001-0004.821	C-KERAMIK EDPT	22N 20/ 80 40V	R10000 2 56	1	110/02/10			L
54C 4	0001-0004.698	C-KERAMIK EDPT	1N 10% 63V	R 2000 2 56	1	110/02/10			L
54C 5	0001-0004.818	C-KERAMIK EDPT	10N 20/100 40V	R10000 2 56	1	110/02/10			L
54C 6	0001-0004.818	C-KERAMIK EDPT	10N 20/100 40V	R10000 2 56	1	110/02/10			L
54C 7	0001-0040.966	ELKO-TA SINT FEST	22U 20% 16V	ETR-3 56	1	110/05/61			L
54C 9	0855-0022.006	C-KERAMIK DDNZ	4N7 20/ 80 63V	D 6000 2 04	1				L
54R 1	0001-0007.064	R-KOHLE	18K 5% 0207	56	1	DRALORIC			L
54R 2	0001-0007.064	R-KOHLE	18K 5% 0207	56	1	DRALORIC			L
54R 3	0001-0006.751	R-KOHLE	68R 5% 0207	56	1	DRALORIC			L
54R 4	0001-0007.077	R-KOHLE	22K 5% 0207	56	1	DRALORIC			L
54R 5	0001-0006.751	R-KOHLE	68R 5% 0207	56	1	DRALORIC			L
54R 6	0001-0007.080	R-KOHLE	27K 5% 0207	56	1	DRALORIC			L
54R 7	0001-0006.751	R-KOHLE	68R 5% 0207	56	1	018/03/01			L
54R 9	0001-0007.006	R-KOHLE	5K6 5% 0207	56	1	DRALORIC			L

S C H A L T T E I L L I S T E / P A R T - L I S T

SERIE M 2011-8401.005 OD-15 2011/01 AUSF:

TEILE-NR PART NO	SACH-NR ITEM NO	BENENNUNG DESIGNATION	BEZEICHNUNG 1 MARKING 1	BEZEICHNUNG 2 MARKING 2	MG QU	WERKNORM REF.DESIG	BEMERKUNG NOTE	SERIE AF VERSION	C
54R 10	0001-0007.006	R-KOHLE	5K6 5% 0207	56	1	DRALORIC			L
54R 11	0001-0006.913	R-KOHLE	1K 5% 0207	56	1	DRALORIC			L
54R 12	0001-0006.751	R-KOHLE	68R 5% 0207	56	1	DRALORIC			L
54R 13	0001-0006.942	R-KOHLE	1K8 5% 0207	56	1	DRALORIC			L
54R 14	0001-0007.064	R-KOHLE	18K 5% 0207	56	1	DRALORIC			L
54R 15	0001-0007.064	R-KOHLE	18K 5% 0207	56	1	DRALORIC			L
54R 16	0001-0001.730	R-METALL	3K92 1% 0207	TK 50 56	1	DRALORIC			L
54R 17	0001-0001.497	R-METALL	2K21 1% 0207	TK 50 56	1	DRALORIC			L
54R 18	0001-0006.719	R-KOHLE	39R 5% 0207	56	1	DRALORIC			L
54R 19	0001-0006.793	R-KOHLE	100R 5% 0207	56	1	DRALORIC			L
54R 20	0001-0006.997	R-KOHLE	4K7 5% 0207	56	1	DRALORIC			L
54R 21	0001-0007.158	R-KOHLE	100K 5% 0207	56	1	DRALORIC			L
54R 21	0001-0007.158	R-KOHLE	100K 5% 0207	56	1	018/03/01			L
54T 1	0001-0016.987	TRANS SI NPN	2 N 2369(BSX93) A TO 18		1	FSC			L
54T 2	0001-0016.929	TRANS SI PNP	2 N 2894(BSX29) A TO 18		1	FSC			L
54T 3	0001-0016.929	TRANS SI PNP	2 N 2894(BSX29) A TO 18		1	FSC			L
54T 4	0001-0016.929	TRANS SI PNP	2 N 2894(BSX29) A TO 18		1	FSC			L
54T 5	0001-0016.987	TRANS SI NPN	2 N 2369(BSX93) A TO 18		1	FSC			L
54T 6	0001-0016.518	TRANS SI NPN	BCY 59 X (D) A TO 18		1	TFK			L
55C 1	0001-0040.885	ELKO-TA SINT FEST	10U 20% 25V	ETR-3 56	1	110/05/61		F-..	L
55C 2	0001-0004.821	C-KERAMIK EDPT	22N 20/ 80 40V	R10000 2 56	1	110/02/10		F-..	L
55C 3	0001-0004.821	C-KERAMIK EDPT	22N 20/ 80 40V	R10000 2 56	1	110/02/10		F-..	L
55C 4	0001-0004.821	C-KERAMIK EDPT	22N 20/ 80 40V	R10000 2 56	1	110/02/10		F-..	L
55C 5	0001-0004.821	C-KERAMIK EDPT	22N 20/ 80 40V	R10000 2 56	1	110/02/10		F-..	L
55C 6	0001-0004.821	C-KERAMIK EDPT	22N 20/ 80 40V	R10000 2 56	1	110/02/10		F-..	L
55C 7	0001-0004.559	C-KERAMIK EDPT	120P 2% 63V	NP 0 1B 56	1	110/02/09		F-..	L
55C 11	0001-0004.575	C-KERAMIK EDPT	150P 2% 63V	N 150 1B 56	1	110/02/09		F-..	L
55C 12	0001-0004.821	C-KERAMIK EDPT	22N 20/ 80 40V	R10000 2 56	1	110/02/10		F-..	L
55C 13	0001-0004.601	C-KERAMIK EDPT	220P 2% 63V	N 750 1B 56	1	110/02/09		F-..	L
55C 15	0855-0022.006	C-KERAMIK DDMZ	4N7 20/ 80 63V	D 6000 2 04	1				L
55GL 1	0001-0018.493	DIODE SI	1 N 4448 DO 35		1	ITT		F-..	L
55IC 1	0001-0071.427	IC-TTL	74LS112AN DIP 16		1	TEXAS		F-..	L
55IC 2	0001-0071.427	IC-TTL	74LS112AN DIP 16		1	TEXAS		F-..	L
55IC 3	0001-0071.427	IC-TTL	74LS112AN DIP 16		1	TEXAS		F-..	L
55IC 4	0001-0071.427	IC-TTL	74LS112AN DIP 16		1	TEXAS		F-..	L
55IC 5	0001-0067.169	IC-TTL	74LS08N DIP 14		1	TEXAS		F-..	L
55IC 6	0000-7565.399	IC-LOCMOS	40174BP DIP 16	858521	1	VALVO		F-..	L
55IC 7	0001-0016.026	IC-CMOS	4023BCP DIP 14	MOS	1	MOTOROLA		F-..	L
55IC 8	0001-0015.988	IC-CMOS	4011BCP DIP 14	MOS	1	MOTOROLA		F-..	L
55IC 9	0000-7565.111	IC-LOCMOS	4068BP DIP 14	858521	1	VALVO		F-..	L
55IC 10	0001-0016.042	IC-CMOS	4027BCP DIP 16	MOS	1	MOTOROLA		F-..	L
55IC 11	0000-7565.328	IC-LOCMOS	4027BP DIP 16	858521	1	VALVO		F-..	L
55IC 12	0001-0068.197	IC CMOS	4049UBCP DIP 16	MOS	1	MOTOROLA		F-..	L
55IC 14	0001-0065.695	IC-TTL	74LS00N DIP 14		1	TEXAS		F-..	L
55IC 15	0000-7565.085	IC-LOCMOS	4025BP DIP 14	858521	1	VALVO		F-..	L
55L 1	0000-7567.737	DAEMPFUNGSPERLE	DA= 3,5 DI= 1,2 L= 3,3	B62110-A3011-X022	1	SIEMENS			L

Bei Bestellung Sach-Nr. angeben!
When ordering, quote Item No.

SEPIC M 2011-8401.005 OD-15 2011/01 AUSF:

TEILE-NR PART NO	SACH-NR ITEM NO	BENENNUNG DESIGNATION	BEZEICHNUNG 1 MARKING 1			BEZEICHNUNG 2 MARKING 2		MG QU	WERKNORM REF.DESIG	BEMERKUNG NOTE	SERIE AF VERSION	C
56IC 5	0001-0070.868	IC-CMOS	4082BCP		DIP 14		MOS	1	MOTOROLA			L
56IC 6	0001-0016.026	IC-CMOS	4023BCP		DIP 14		MOS	1	MOTOROLA			L
56IC 7	0001-0016.042	IC-CMOS	4027BCP		DIP 16		MOS	1	MOTOROLA			L
56IC 8	0000-7529.351	IC-CMOS	4160BCP		DIP 16		MOS	1	MOTOROLA			L
56IC 9	0001-0015.988	IC-CMOS	4011BCP		DIP 14		MOS	1	MOTOROLA			L
56IC 10	0001-0016.026	IC-CMOS	4023BCP		DIP 14		MOS	1	MOTOROLA			L
56IC 12	0000-7529.351	IC-CMOS	4160BCP		DIP 16		MOS	1	MOTOROLA			L
56IC 13	0001-0068.197	IC CMOS	4049UBCP		DIP 16		MOS	1	MOTOROLA			L
56IC 14	0000-7529.351	IC-CMOS	4160BCP		DIP 16		MOS	1	MOTOROLA			L
56IC 15	0000-7565.328	IC-LOCMOS	4027BP		DIP 16		858521	1	VALVO			L
56IC 16	0001-0015.988	IC-CMOS	4011BCP		DIP 14		MOS	1	MOTOROLA			L
56IC 17	0001-0016.042	IC-CMOS	4027BCP		DIP 16		MOS	1	MOTOROLA			L
56IC 18	0000-7529.351	IC-CMOS	4160BCP		DIP 16		MOS	1	MOTOROLA			L
56IC 19	0001-0015.988	IC-CMOS	4011BCP		DIP 14		MOS	1	MOTOROLA			L
56IC 20	0001-0070.868	IC-CMOS	4082BCP		DIP 14		MOS	1	MOTOROLA			L
56IC 21	0001-0016.026	IC-CMOS	4023BCP		DIP 14		MOS	1	MOTOROLA			L
56IC 22	0000-7529.351	IC-CMOS	4160BCP		DIP 16		MOS	1	MOTOROLA			L
56IC 23	0001-0065.475	IC-CMOS	4012BCP		DIP 14		MOS	1	MOTOROLA			L
56R 1	0001-0006.625	R-KOHLE	5R6	5%	0207		56	1	DRALORIC			L
56R 2	0000-7614.127	R-METALL	336K	0%5	0207	TK 50	56	1	DRALORIC			L
56R 3	0000-7614.143	R-METALL	167K	0%5	0207	TK 50	56	1	DRALORIC			L
56R 4	0000-7614.208	R-METALL	83K5	0%5	0207	TK 50	56	1	DRALORIC			L
56R 5	0000-7547.401	R-METALL	41K7	0%5	0207	TK 50	56	1	DRALORIC			L
56R 6	0000-7610.817	R-METALL	3M32	2%	0207	TK100	56	1	RESISTA			L
56R 7	0000-7614.321	R-METALL	1M69	1%	0207	TK 50	56	1	DRALORIC			L
56R 8	0000-7614.211	R-METALL	845K	0%5	0207	TK 50	56	1	DRALORIC			L
56R 9	0000-7614.282	R-METALL	422K	0%5	0207	TK 50	56	1	DRALORIC			L
56R 10	0001-0002.137	R-METALL	10K	1%	0207	TK 50	56	1	DRALORIC			L
56R 11	0001-0006.913	R-KOHLE	1K	5%	0207		56	1	DRALORIC			L
56R 12	0001-0006.913	R-KOHLE	1K	5%	0207		56	1	DRALORIC			L
56R 13	0001-0006.913	R-KOHLE	1K	5%	0207		56	1	DRALORIC			L
56R 14	0001-0006.913	R-KOHLE	1K	5%	0207		56	1	DRALORIC			L
57C 1	0001-0004.290	C-KERAMIK EDPT	22P	2%	63V	N 150 1B	56	1	110/02/09		B-..	L
57C 2	0001-0004.821	C-KERAMIK EDPT	22N	20/ 80	40V	R10000 2	56	1	110/02/10		B-..	L
57C 3	0000-7566.505	C-KF MKT	10N	20%	400V	MKT1822	56	1	110/03/07		B-..	L
57C 4	0001-0004.180	C-KERAMIK EDPT	10P	2%	63V	N 150 1B	56	1	110/02/09		B-..	L
57C 5	0001-0004.821	C-KERAMIK EDPT	22N	20/ 80	40V	R10000 2	56	1	110/02/10		B-..	L
57C 6	0001-0004.821	C-KERAMIK EDPT	22N	20/ 80	40V	R10000 2	56	1	110/02/10		B-..	L
57C 7	0001-0004.177	C-KERAMIK EDPT	10P	2%	63V	NP 0 1B	56	1	110/02/09		B-..	L
57C 8	0001-0040.885	ELKO-TA SINT FEST	10U	20%	25V	ETR-3	56	1	110/05/61		B-..	L
57C 9	0000-7598.573	C-KF KP	4N22	1%	63V	B33531	56	1	110/03/13		B-..	L
57C 10	0001-0010.323	C-KF MKT	47N	20%	250V	MKT1822	56	1	110/03/07		B-..	L
57C 11	0001-0004.821	C-KERAMIK EDPT	22N	20/ 80	40V	R10000 2	56	1	110/02/10		B-..	L
57C 12	0001-0040.775	ELKO-TA SINT FEST	3U3	20%	16V	ETR-1	56	1	110/05/61		B-..	L
57C 13	0001-0004.711	C-KERAMIK EDPT	1N5	10%	63V	R 2000 2	56	1	110/02/10		B-..	L
57C 14	0001-0004.630	C-KERAMIK EDPT	330P	2%	63V	N 750 1B	56	1	110/02/09		B-..	L
57C 15	0001-0010.268	C-KF MKT	22N	20%	400V	MKT1822	56	1	110/03/07		B-..	L
57C 16	0001-0010.459	C-KF MKT	470N	20%	100V	MKT1822	56	1	110/03/07		B-..	L

Bei Bestellung Sach-Nr. angeben!
When ordering, quote Item No.

SERIE M 2011-2401-005 OD-15 2011/01 AUSF:

TEILE-NR PART NO	SACH-NR ITEM NO	BENENNUNG DESIGNATION	BEZEICHNUNG 1 MARKING 1	BEZEICHNUNG 2 MARKING 2	MG QU	WERKNORM REF.DESIG	BEMERKUNG NOTE	SERIE AF VERSION	C
57C 18	0001-0010.378	C-KF MKT	100N 20% 100V	MKT1822 56	1	110/03/07		B-..	L
57C 19	0001-0010.323	C-KF MKT	47N 20% 250V	MKT1822 56	1	110/03/07		B-..	L
57C 20	0001-0040.966	ELKO-TA SINT FEST	22U 20% 16V	ETR-3 56	1	110/05/61		B-..	L
57C 21	0001-0040.966	ELKO-TA SINT FEST	22U 20% 16V	ETR-3 56	1	110/05/61		B-..	L
57C 22	0001-0004.737	C-KERAMIK EDPT	2N2 10% 63V	R 2000 2 56	1	110/02/10		B-..	L
57C 23	0001-0010.093	C-KF MKT	1U 10% 100V	MKT1813 56	1	110/03/06		B-..	L
57C 24	0001-0010.394	C-KF MKT	150N 20% 100V	MKT1822 56	1	110/03/07		B-..	L
57C 25	0001-0041.745	ELKO-AL	47U 10/ 50 16V	B41588 56	1	110/05/40		B-..	L
57C 26	0001-0010.394	C-KF MKT	150N 20% 100V	MKT1822 56	1	110/03/07		B-..	L
57C 27	0001-0041.745	ELKO-AL	47U 10/ 50 16V	B41588 56	1	110/05/40		B-..	L
57C 28	0001-0004.737	C-KERAMIK EDPT	2N2 10% 63V	R 2000 2 56	1	110/02/10		B-..	L
57C 30	0855-0025.003	C-KERAMIK DDMZ	4N7 20/ 80 63V	D 6000 2 04	1				L
57C 31	0855-0025.003	C-KERAMIK DDMZ	4N7 20/ 80 63V	D 6000 2 04	1				L
57C 32	0855-0025.003	C-KERAMIK DDMZ	4N7 20/ 80 63V	D 6000 2 04	1				L
57GL 1	0001-0018.998	DIODE SI Z-	ZPD 7,5 DO 35		1	ITT		B-..	L
57GL 2	0001-0018.493	DIODE SI	1 N 4448 DO 35		1	ITT		B-..	L
57GL 3	0001-0018.493	DIODE SI	1 N 4448 DO 35		1	ITT		B-..	L
57GL 4	0000-7600.429	IC-DIODEN-ARRAY	ID101 TO 71		1	INTERSIL		B-..	L
57GL 6	0001-0018.493	DIODE SI	1 N 4448 DO 35		1	ITT		B-..	L
57GL 7	0001-0018.493	DIODE SI	1 N 4448 DO 35		1	ITT		B-..	L
57GL 8	0001-0018.493	DIODE SI	1 N 4448 DO 35		1	ITT		B-..	L
57GL 9	0001-0018.493	DIODE SI	1 N 4448 DO 35		1	ITT		B-..	L
57GL 10	0001-0018.493	DIODE SI	1 N 4448 DO 35		1	ITT		B-..	L
57GL 11	0001-0018.493	DIODE SI	1 N 4448 DO 35		1	ITT		B-..	L
57GL 12	0001-0018.833	DIODE SI Z-	ZPD 5,1 DO 35		1	ITT		B-..	L
57GL 13	0001-0018.833	DIODE SI Z-	ZPD 5,1 DO 35		1	ITT		B-..	L
57IC 1	0001-0015.988	IC-CMOS	4011BCP DIP 14	MOS	1	MOTOROLA		B-..	L
57IC 2	0001-0015.988	IC-CMOS	4011BCP DIP 14	MOS	1	MOTOROLA		B-..	L
57IC 3	0001-0065.475	IC-CMOS	4012BCP DIP 14	MOS	1	MOTOROLA		B-..	L
57IC 4	0000-7578.085	IC-QUAD OP.-VERST.	UA324PC DIP 14		1	FSC		B-..	L
57IC 5	0000-7581.140	IC-DUAL OP.-VERST.	LM358N DIP 8		1	MOTOROLA		B-..	L
57IC 6	0000-7567.054	IC-OP.-VERST. FET	TL081ACP DIP 8		1	MOTOROLA		B-..	L
57IC 7	0000-7556.777	IC-OP.-VERST.	UA714HC TO 99		1	FSC		B-..	L
57IC 8	0000-7556.777	IC-OP.-VERST.	UA714HC TO 99		1	FSC		B-..	L
57L 1	2011-7830.004	SPULE			1			B-..	A
57L 2	0001-0043.109	L-FEST	220U 5% 1537-92	45 0,8 6 7R45 103MA	1	117/01/02		B-..	L
57L 3	0001-0043.109	L-FEST	220U 5% 1537-92	45 0,8 6 7R45 103MA	1	117/01/02		B-..	L
57L 4	0000-7567.737	DAEMPFUNGSPERLE	DA= 3,5 DI= 1,2 L= 3,3	B62110-A3011-X022	1	SIEMENS		B-..	L
57P 1	0000-7537.929	R-TRIM CERMET SQUARE	10K 10% 0W2 20	TK 100 T93YA 56	1	017/04/06		B-..	L
57P 2	0001-0008.348	R-TRIM CERMET LIEG	100K 20% 0W5 1	TK 100 (ALT 17/02/08)	1	017/02/15		B-..	L
57P 3	0000-7571.723	R-TRIM CERMET SQUARE	1K 10% 0W2 20	TK 100 T93YA 56	1	017/04/06		B-..	L
57P 4	0000-7571.707	R-TRIM CERMET SQUARE	100R 10% 0W2 20	TK 100 T93YA 56	1	017/04/06		B-..	L
57P 5	0001-0008.351	R-TRIM CERMET LIEG	470K 20% 0W5 1	TK 100 (ALT 17/02/08)	1	017/02/15		B-..	L
57R 1	0001-0002.221	R-METALL	12K4 1% 0207	TK 50 56	1	DRALORIC		B-..	L
57R 2	0001-0001.895	R-METALL	5K62 1% 0207	TK 50 56	1	DRALORIC		B-..	L
57R 3	0001-0002.098	R-METALL	9K09 1% 0207	TK 50 56	1	DRALORIC		B-..	L

Bei Bestellung Sach-Nr. angeben!
When ordering, quote Item No.

SERIE Nº 2011-8401.005 OD-15 2011/01 AUSF:

TEILE-NR PART NO	SACH-NR ITEM NO	BENENNUNG DESIGNATION	BEZEICHNUNG 1 MARKING 1			BEZEICHNUNG 2 MARKING 2		MG GU	WERKNORM REF.DESIG	BEMERKUNG NOTE	SERIE AF VERSION	C
57R 4	0001-0001.183	R-METALL	909R	1%	0207	TK 50	56	1	DRALORIC		B-..	L
57R 5	0001-0006.751	R-KOHLE	68R	5%	0207		56	1	DRALORIC		B-..	L
57R 6	0001-0007.103	R-KOHLE	39K	5%	0207		56	1	018/03/01		B-..	L
57R 7	0001-0007.103	R-KOHLE	39K	5%	0207		56	1	018/03/01		B-..	L
57R 8	0001-0002.467	R-METALL	23K7	1%	0207	TK 50	56	1	DRALORIC		B-..	L
57R 9	0001-0065.365	R-METALL	53K6	1%	0207	TK 50	56	1	DRALORIC		B-..	L
57R 10	0001-0007.174	R-KOHLE	150K	5%	0207		56	1	018/03/01		B-..	L
57R 11	0001-0002.904	R-METALL	75K	1%	0207	TK 50	56	1	DRALORIC		B-..	L
57R 12	0001-0006.719	R-KOHLE	39R	5%	0207		56	1	DRALORIC		B-..	L
57R 13	0001-0002.328	R-METALL	16K5	1%	0207	TK 50	56	1	DRALORIC		B-..	L
57R 14	0001-0001.992	R-METALL	7K15	1%	0207	TK 50	56	1	DRALORIC		B-..	L
57R 15	0001-0001.183	R-METALL	909R	1%	0207	TK 50	56	1	DRALORIC		B-..	L
57R 16	0001-0006.751	R-KOHLE	68R	5%	0207		56	1	DRALORIC		B-..	L
57R 17	0001-0007.048	R-KOHLE	12K	5%	0207		56	1	DRALORIC		B-..	L
57R 18	0001-0007.048	R-KOHLE	12K	5%	0207		56	1	DRALORIC		B-..	L
57R 19	0001-0002.467	R-METALL	23K7	1%	0207	TK 50	56	1	DRALORIC		B-..	L
57R 20	0001-0002.865	R-METALL	66K5	1%	0207	TK 50	56	1	DRALORIC		B-..	L
57R 21	0001-0002.946	R-METALL	84K5	1%	0207	TK 50	56	1	DRALORIC		B-..	L
57R 22	0001-0063.121	R-METALL	402K	1%	0207	TK 50	56	1	DRALORIC		B-..	L
57R 23	0001-0002.959	R-METALL	86K6	1%	0207	TK 50	56	1	DRALORIC		B-..	L
57R 24	0001-0006.939	R-KOHLE	1K5	5%	0207		56	1	DRALORIC		B-..	L
57R 25	0001-0006.751	R-KOHLE	68R	5%	0207		56	1	DRALORIC		B-..	L
57R 26	0001-0002.603	R-METALL	33K2	1%	0207	TK 50	56	1	DRALORIC		B-..	L
57R 27	0001-0001.992	R-METALL	7K15	1%	0207	TK 50	56	1	DRALORIC		B-..	L
57R 28	0001-0002.328	R-METALL	16K5	1%	0207	TK 50	56	1	DRALORIC		B-..	L
57R 29	0001-0001.316	R-METALL	1K33	1%	0207	TK 50	56	1	DRALORIC		B-..	L
57R 30	0001-0001.251	R-METALL	1K15	1%	0207	TK 50	56	1	DRALORIC		B-..	L
57R 31	0001-0006.751	R-KOHLE	68R	5%	0207		56	1	DRALORIC		B-..	L
57R 32	0001-0007.200	R-KOHLE	270K	5%	0207		56	1	018/03/01		B-..	L
57R 33	0001-0003.725	R-METALL	357K	1%	0207	TK 50	56	1	DRALORIC		B-..	L
57R 34	0001-0003.408	R-METALL	562K	1%	0207	TK 50	56	1	DRALORIC		B-..	L
57R 35	0001-0001.756	R-METALL	4K12	1%	0207	TK 50	56	1	DRALORIC		B-..	L
57R 36	0001-0006.997	R-KOHLE	4K7	5%	0207		56	1	DRALORIC		B-..	L
57R 37	0001-0001.808	R-METALL	4K64	1%	0207	TK 50	56	1	DRALORIC		B-..	L
57R 38	0001-0001.808	R-METALL	4K64	1%	0207	TK 50	56	1	DRALORIC		B-..	L
57R 39	0001-0006.939	R-KOHLE	1K5	5%	0207		56	1	DRALORIC		B-..	L
57R 40	0001-0000.993	R-METALL	523R	1%	0207	TK 50	56	1	DRALORIC		B-..	L
57R 41	0001-0000.993	R-METALL	523R	1%	0207	TK 50	56	1	DRALORIC		B-..	L
57R 42	0001-0007.022	R-KOHLE	8K2	5%	0207		56	1	DRALORIC		B-..	L
57R 43	0001-0007.145	R-KOHLE	82K	5%	0207		56	1	018/03/01		B-..	L
57R 44	0001-0007.103	R-KOHLE	39K	5%	0207		56	1	018/03/01		B-..	L
57R 45	0001-0003.181	R-METALL	200K	1%	0207	TK 50	56	1	DRALORIC		B-..	L
57R 46	0001-0003.181	R-METALL	200K	1%	0207	TK 50	56	1	DRALORIC		B-..	L
57R 47	0001-0062.025	R-METALL	301K	1%	0207	TK 50	56	1	DRALORIC		B-..	L
57R 48	0001-0062.025	R-METALL	301K	1%	0207	TK 50	56	1	DRALORIC		B-..	L
57R 49	0001-0062.025	R-METALL	301K	1%	0207	TK 50	56	1	DRALORIC		B-..	L
57R 50	0001-0062.025	R-METALL	301K	1%	0207	TK 50	56	1	DRALORIC		B-..	L
57R 51	0001-0007.323	R-KOHLE	2M2	5%	0207		56	1	DRALORIC		B-..	L
57R 52	0001-0006.858	R-KOHLE	330R	5%	0207		56	1	DRALORIC		B-..	L
57R 53	0001-0007.158	R-KOHLE	100K	5%	0207		56	1	018/03/01		B-..	L
57R 54	0001-0003.233	R-METALL	243K	1%	0207	TK 50	56	1	DRALORIC		B-..	L

Bei Bestellung Sach-Nr. angeben!
When ordering, quote Item No.

SERIE P 2011-8401.005 OD-15 2011/01 AUSF:

TEILE-NR PART NO	SACH-NR ITEM NO	BENENNUNG DESIGNATION	BEZEICHNUNG 1 MARKING 1	BEZEICHNUNG 2 MARKING 2	MG QU	WERKNORM REF.DESIG	BEMERKUNG NOTE	SERIE AF VERSION	C
57P 55	0001-0002.593	R-METALL	32R4 1% 0207	TK 50 56	1	DRALORIC		B-..	L
57R 56	0001-0007.284	R-KOHLE	1M 5% 0207	56	1	DRALORIC		B-..	L
57R 57	0001-0007.158	R-KOHLE	100K 5% 0207	56	1	018/03/01		B-..	L
57R 58	0001-0006.955	R-KOHLE	2K2 5% 0207	56	1	DRALORIC		B-..	L
57R 59	0001-0007.035	R-KOHLE	10K 5% 0207	56	1	DRALORIC		B-..	L
57R 60	0001-0007.035	R-KOHLE	10K 5% 0207	56	1	DRALORIC		B-..	L
57R 61	0001-0006.890	R-KOHLE	680R 5% 0207	56	1	DRALORIC		B-..	L
57R 62	0001-0003.822	R-METALL	110K 1% 0207	TK 50 56	1	DRALORIC		B-..	L
57R 63	0001-0001.413	R-METALL	1K82 1% 0207	TK 50 56	1	DRALORIC		B-..	L
57R 64	0001-0000.715	R-METALL	221R 1% 0207	TK 50 56	1	DRALORIC		B-..	L
57R 65	0001-0000.980	R-METALL	499R 1% 0207	TK 50 56	1	DRALORIC		B-..	L
57R 66	0001-0007.019	R-KOHLE	6K8 5% 0207	56	1	DRALORIC		B-..	L
57R 67	0001-0007.019	R-KOHLE	6K8 5% 0207	56	1	DRALORIC		B-..	L
57R 68	0001-0007.080	R-KOHLE	27K 5% 0207	56	1	018/03/01		B-..	L
57R 69	0001-0007.161	R-KOHLE	120K 5% 0207	56	1	018/03/01		B-..	L
57R 70	0001-0007.158	R-KOHLE	100K 5% 0207	56	1	018/03/01		B-..	L
57R 71	0001-0006.900	R-KOHLE	820R 5% 0207	56	1	DRALORIC		B-..	L
57R 72	0001-0006.751	R-KOHLE	68R 5% 0207	56	1	DRALORIC		B-..	L
57R 73	0001-0006.751	R-KOHLE	68R 5% 0207	56	1	DRALORIC		B-..	L
57R 74	0001-0003.796	R-METALL	1K78 1% 0207	TK 50 56	1	DRALORIC		B-..	L
57R 75	0001-0006.913	R-KOHLE	1K 5% 0207	56	1	DRALORIC		B-..	L
57S 1	0000-1832.015	S-DUAL-IN-LINE	1 100 SN HAKEN-	GEK.: C42315-A1347-A124	1	SIEMENS		B-..	L
57S 2	0000-1832.015	S-DUAL-IN-LINE	1 100 SN HAKEN-	GEK.: C42315-A1347-A124	1	SIEMENS		B-..	L
57T 1	0001-0016.550	TRANS SI PNP	BCY 78 X (D) A TO 18		1	MOT		B-..	L
57T 2	0001-0016.712	TRANS SI PNP	2 N 4035(BFX48) A TO 18		1	SGS		B-..	L
57T 3	0001-0016.712	TRANS SI PNP	2 N 4035(BFX48) A TO 18		1	SGS		B-..	L
57T 4	0001-0016.987	TRANS SI NPN	2 N 2369(BSX93) A TO 18		1	FSC		B-..	L
57T 5	0001-0016.903	TRANS SI NPN	BFY 90 A TO 72		1	SIEMENS		B-..	L
57T 6	0001-0016.518	TRANS SI NPN	BCY 59 X (D) A TO 18		1	TFK		B-..	L
57T 7	0001-0016.518	TRANS SI NPN	BCY 59 X (D) A TO 18		1	TFK		B-..	L
57T 8	0001-0016.550	TRANS SI PNP	BCY 78 X (D) A TO 18		1	MOT		B-..	L
57T 9	0001-0016.518	TRANS SI NPN	BCY 59 X (D) A TO 18		1	TFK		B-..	L
57T 10	0001-0016.550	TRANS SI PNP	BCY 78 X (D) A TO 18		1	MOT		B-..	L
57T 11	0001-0016.550	TRANS SI PNP	BCY 78 X (D) A TO 18		1	MOT		B-..	L
57T 12	0001-0016.987	TRANS SI NPN	2 N 2369(BSX93) A TO 18		1	FSC		B-..	L
57T 13	0001-0016.903	TRANS SI NPN	BFY 90 A TO 72		1	SIEMENS		B-..	L
57T 14	0001-0016.518	TRANS SI NPN	BCY 59 X (D) A TO 18		1	TFK		B-..	L
57T 15	0000-7567.850	TRANS SI N/N JFET	U 402 H TO 71	MOS	1	SILICONIX		B-..	L
57T 16	0001-0016.518	TRANS SI NPN	BCY 59 X (D) A TO 18		1	TFK		B-..	L
57T 17	0001-0016.518	TRANS SI NPN	BCY 59 X (D) A TO 18		1	TFK		B-..	L
57T 18	0001-0016.550	TRANS SI PNP	BCY 78 X (D) A TO 18		1	MOT		B-..	L
57T 19	0001-0016.518	TRANS SI NPN	BCY 59 X (D) A TO 18		1	TFK		B-..	L
57T 20	0001-0016.550	TRANS SI PNP	BCY 78 X (D) A TO 18		1	MOT		B-..	L
57T 21	0001-0016.550	TRANS SI PNP	BCY 78 X (D) A TO 18		1	MOT		B-..	L
57T 22	0001-0016.518	TRANS SI NPN	BCY 59 X (D) A TO 18		1	TFK		B-..	L
57T 23	0001-0016.628	TRANS SI N JFET	BF 245 A D SOT 54		1	VALVO		B-..	L
57T 24	0001-0016.518	TRANS SI NPN	BCY 59 X (D) A TO 18		1	TFK		B-..	L
57T 25	0000-7513.231	TRANS SI NPN DARLING	MPS-A 13 B TO 92		1	MOTOROLA		B-..	L
57T 26	0000-7531.491	TRANS SI PNP DARLING	MPS-A 63 B TO 92		1	MOTOROLA		B-..	L

Bei Bestellung Sach-Nr. angeben!
When ordering, quote Item No.

SERIE M 2011-8401.005 0D-15 2011/01 AUSF:

TEILE-NR PART NO	SACH-NR ITEM NO	BENENNUNG DESIGNATION	BEZEICHNUNG 1 MARKING 1	BEZEICHNUNG 2 MARKING 2	MG QU	WERKNORM REF.DESIG	BEMERKUNG NOTE	SERIE AF VERSION	C
58C 1	0001-0040.966	ELKO-TA SINT FEST	22U 20% 16V	ETR-3 56	1	110/05/61			L
58C 2	0001-0004.504	C-KERAMIK EDPT	100P 2% 63V	NP 0 1B 56	1	110/02/09			L
58C 3	0001-0004.821	C-KERAMIK EDPT	22N 20/ 80 40V	R10000 2 56	1	110/02/10			L
58C 4	0001-0004.818	C-KERAMIK EDPT	10N 20/100 40V	R10000 2 56	1	110/02/10			L
58C 5	0001-0004.818	C-KERAMIK EDPT	10N 20/100 40V	R10000 2 56	1	110/02/10			L
58C 6	0001-0004.818	C-KERAMIK EDPT	10N 20/100 40V	R10000 2 56	1	110/02/10			L
58C 7	0001-0004.698	C-KERAMIK EDPT	1N 10% 63V	R 2000 2 56	1	110/02/10			L
58C 8	0001-0004.698	C-KERAMIK EDPT	1N 10% 63V	R 2000 2 56	1	110/02/10			L
58C 9	0001-0004.698	C-KERAMIK EDPT	1N 10% 63V	R 2000 2 56	1	110/02/10			L
58C 10	0001-0004.009	C-KERAMIK EDPT	2P2 0P25 63V	NP 0 1B 56	1	110/02/09	ABGLEICHWERT	D-..	L
58C 11	0001-0004.821	C-KERAMIK EDPT	22N 20/ 80 40V	R10000 2 56	1	110/02/10			L
58C 12	0001-0040.966	ELKO-TA SINT FEST	22U 20% 16V	ETR-3 56	1	110/05/61			L
58C 13	0001-0004.821	C-KERAMIK EDPT	22N 20/ 80 40V	R10000 2 56	1	110/02/10			L
58C 14	0001-0004.698	C-KERAMIK EDPT	1N 10% 63V	R 2000 2 56	1	110/02/10			L
58C 15	0001-0004.698	C-KERAMIK EDPT	1N 10% 63V	R 2000 2 56	1	110/02/10			L
58C 16	0001-0004.698	C-KERAMIK EDPT	1N 10% 63V	R 2000 2 56	1	110/02/10			L
58C 17	0001-0004.698	C-KERAMIK EDPT	1N 10% 63V	R 2000 2 56	1	110/02/10			L
58C 18	0001-0004.698	C-KERAMIK EDPT	1N 10% 63V	R 2000 2 56	1	110/02/10			L
58C 19	0001-0040.775	ELKO-TA SINT FEST	3U3 20% 16V	ETR-1 56	1	110/05/61			L
58C 20	0001-0004.818	C-KERAMIK EDPT	10N 20/100 40V	R10000 2 56	1	110/02/10			L
58C 22	0855-0025.003	C-KERAMIK DDMZ	4N7 20/ 80 63V	D 6000 2 04	1				L
58C 23	0855-0025.003	C-KERAMIK DDMZ	4N7 20/ 80 63V	D 6000 2 04	1				L
58C 24	0855-0025.003	C-KERAMIK DDMZ	4N7 20/ 80 63V	D 6000 2 04	1				L
58GL 1	0001-0018.231	DIODE SI SCHOTTKY-	HP 5082-2811 DO 35	= 1N5713	1	HPA			
58GL 2	0001-0018.231	DIODE SI SCHOTTKY-	HP 5082-2811 DO 35	= 1N5713	1	HPA			L
58GL 3	0001-0018.231	DIODE SI SCHOTTKY-	HP 5082-2811 DO 35	= 1N5713	1	HPA			L
58GL 4	0001-0018.231	DIODE SI SCHOTTKY-	HP 5082-2811 DO 35	= 1N5713	1	HPA			L
58GL 5	0001-0018.231	DIODE SI SCHOTTKY-	HP 5082-2811 DO 35	= 1N5713	1	HPA			L
58GL 6	0001-0018.493	DIODE SI	1 N 4448 DO 35		1	ITT			L
58GL 7	0001-0018.493	DIODE SI	1 N 4448 DO 35		1	ITT			L
58GL 8	0001-0018.493	DIODE SI	1 N 4448 DO 35		1	ITT			L
58GL 9	0001-0018.493	DIODE SI	1 N 4448 DO 35		1	ITT			L
58GL 10	0001-0018.493	DIODE SI	1 N 4448 DO 35		1	ITT			L
58GL 11	0000-7574.982	DIODE SI C-	BB 329 DO 35	NACHFOLGER VON BB 139	1	ITT			L
58GL 12	0000-7574.982	DIODE SI C-	BB 329 DO 35	NACHFOLGER VON BB 139	1	ITT			L
58GL 13	0001-0018.493	DIODE SI	1 N 4448 DO 35		1	ITT			L
58GL 14	0001-0018.493	DIODE SI	1 N 4448 DO 35		1	ITT			L
58GL 15	0001-0018.493	DIODE SI	1 N 4448 DO 35		1	ITT			L
58IC 1	0001-0068.197	IC CMOS	4049UBCP DIP 16	MOS	1	MOTOROLA			
58IC 2	0001-0067.567	IC-CMOS	4028BCP DIP 16	MOS	1	MOTOROLA			L
58L 1	0000-7556.311	L-FEST	150U 10% 1025-72	30 0,8 11 15R 58MA	1	117/01/03			
58L 2	0000-7556.065	L-FEST	1U2 10% 1025-22	25 7,9 150 0R18 565MA	1	117/01/03			L
58L 3	0000-7556.175	L-FEST	10U 10% 1025-44	55 7,9 50 3R4 130MA	1	117/01/03			L
58L 4	0000-7556.175	L-FEST	10U 10% 1025-44	55 7,9 50 3R4 130MA	1	117/01/03			L
58L 5	0000-7556.175	L-FEST	10U 10% 1025-44	55 7,9 50 3R4 130MA	1	117/01/03			L
58L 6	0000-7556.175	L-FEST	10U 10% 1025-44	55 7,9 50 3R4 130MA	1	117/01/03			L
58L 7	0000-7556.175	L-FEST	10U 10% 1025-44	55 7,9 50 3R4 130MA	1	117/01/03			L

Bei Bestellung Sach-Nr. angeben!
When ordering, quote Item No.

SERIE M 2011-8401.005 OD-15 2011/01 AUSF:

TEILE-NR PART NO	SACH-NR ITEM NO	BENENNUNG DESIGNATION	BEZEICHNUNG 1 MARKING 1	BEZEICHNUNG 2 MARKING 2	MG QU	WERKNORM REF.DESIG	BEMERKUNG NOTE	SERIE AF VERSION	C
58P 1	0001-0008.490	R-TRIM CERMET STEH	47K 20% 0W5 1	TK 100 (ALT 17/02/08)	1	017/02/15			L
58P 2	0001-0008.487	R-TRIM CERMET STEH	22K 20% 0W5 1	TK 100 (ALT 17/02/08)	1	017/02/15			L
58P 3	0001-0008.487	R-TRIM CERMET STEH	22K 20% 0W5 1	TK 100 (ALT 17/02/08)	1	017/02/15			L
58P 4	0001-0008.474	R-TRIM CERMET STEH	10K 20% 0W5 1	TK 100 (ALT 17/02/08)	1	017/02/15			L
58P 5	0001-0008.474	R-TRIM CERMET STEH	10K 20% 0W5 1	TK 100 (ALT 17/02/08)	1	017/02/15			L
58Q 1	2011-9701.005	STEUERQUARZ	36.000,000KHZ HC/45U		1			--- M	L
58Q 2	2011-9702.004	STEUERQUARZ	38.000,000KHZ HC/45U		1			--- M	L
58Q 3	2011-9703.003	STEUERQUARZ	40.000,000KHZ HC/45U		1			--- M	L
58Q 4	2011-9704.002	STEUERQUARZ	42.000,000KHZ HC/45U		1			--- M	L
58Q 5	2011-9705.001	STEUERQUARZ	44.000,000KHZ HC/45U		1			--- M	L
58R 1	0001-0000.472	R-METALL	82R5 1% 0207	TK 50 56	1	DRALORIC			L
58R 2	0001-0000.715	R-METALL	221R 1% 0207	TK 50 56	1	DRALORIC			L
58R 3	0001-0001.219	R-METALL	1K 1% 0207	TK 50 56	1	DRALORIC			L
58R 4	0001-0002.878	R-METALL	68K1 1% 0207	TK 50 56	1	DRALORIC			L
58R 5	0001-0000.566	R-METALL	121R 1% 0207	TK 50 56	1	DRALORIC			L
58R 6	0001-0000.184	R-METALL	22R1 1% 0207	TK 50 56	1	DRALORIC			L
58R 7	0001-0001.963	R-METALL	6K65 1% 0207	TK 50 56	1	DRALORIC		D-..	L
58R 8	0001-0001.879	R-METALL	5K36 1% 0207	TK 50 56	1	DRALORIC		D-..	L
58R 9	0001-0000.566	R-METALL	121R 1% 0207	TK 50 56	1	DRALORIC			L
58R 10	0001-0002.328	R-METALL	16K5 1% 0207	TK 50 56	1	DRALORIC		D-..	L
58R 11	0001-0000.566	R-METALL	121R 1% 0207	TK 50 56	1	DRALORIC			L
58R 12	0001-0002.137	R-METALL	10K 1% 0207	TK 50 56	1	DRALORIC			L
58R 13	0001-0002.137	R-METALL	10K 1% 0207	TK 50 56	1	DRALORIC			L
58R 14	0001-0002.991	R-METALL	100K 1% 0207	TK 50 56	1	DRALORIC		D-..	L
58R 15	0001-0002.519	R-METALL	26K7 1% 0207	TK 50 56	1	DRALORIC			L
58R 16	0001-0000.472	R-METALL	82R5 1% 0207	TK 50 56	1	DRALORIC			L
58R 17	0001-0002.137	R-METALL	10K 1% 0207	TK 50 56	1	DRALORIC			L
58P 18	0001-0001.824	R-METALL	4K75 1% 0207	TK 50 56	1	DRALORIC			L
58R 19	0001-0002.056	R-METALL	8K25 1% 0207	TK 50 56	1	DRALORIC			L
58R 20	0001-0002.878	R-METALL	68K1 1% 0207	TK 50 56	1	DRALORIC			L
58R 21	0001-0002.739	R-METALL	47K5 1% 0207	TK 50 56	1	DRALORIC			L
58R 22	0001-0002.360	R-METALL	18K2 1% 0207	TK 50 56	1	DRALORIC			L
58R 23	0001-0002.137	R-METALL	10K 1% 0207	TK 50 56	1	DRALORIC			L
58P 24	0001-0001.662	R-METALL	3K32 1% 0207	TK 50 56	1	DRALORIC			L
58R 25	0001-0001.219	R-METALL	1K 1% 0207	TK 50 56	1	DRALORIC			L
58R 26	0001-0001.219	R-METALL	1K 1% 0207	TK 50 56	1	DRALORIC			L
58P 27	0001-0001.219	R-METALL	1K 1% 0207	TK 50 56	1	DRALORIC			L
58P 28	0001-0001.219	R-METALL	1K 1% 0207	TK 50 56	1	DRALORIC			L
58R 29	0001-0001.219	R-METALL	1K 1% 0207	TK 50 56	1	DRALORIC			L
58R 30	0001-0000.472	R-METALL	82R5 1% 0207	TK 50 56	1	DRALORIC			L
58R 31	0001-0000.472	R-METALL	82R5 1% 0207	TK 50 56	1	DRALORIC			L
58R 32	0001-0000.537	R-METALL	100R 1% 0207	TK 50 56	1	DRALORIC			L
58R 33	0001-0000.744	R-METALL	249R 1% 0207	TK 50 56	1	DRALORIC			L
58R 34	0001-0000.074	R-METALL	10R 1% 0207	TK 50 56	1	DRALORIC			L
58R 35	0001-0002.098	R-METALL	9K09 1% 0207	TK 50 56	1	DRALORIC			L
58P 36	0001-0002.386	R-METALL	19K1 1% 0207	TK 50 56	1	DRALORIC			L
58P 37	0001-0002.658	R-METALL	39K2 1% 0207	TK 50 56	1	DRALORIC			L
58R 38	0001-0001.992	R-METALL	7K15 1% 0207	TK 50 56	1	DRALORIC			L
58P 39	0001-0002.593	R-METALL	32K4 1% 0207	TK 50 56	1	DRALORIC			L

Bei Bestellung Sach-Nr. angeben!
When ordering, quote Item No.

SERIE M 2011-8401.005 OD-15 2011/01 AUSF:

TEILE-NR PART NO	SACH-NR ITEM NO	BENENNUNG DESIGNATION	BEZEICHNUNG 1 MARKING 1	BEZEICHNUNG 2 MARKING 2	MG QU	WERKNORM REF.DESIG	BEMERKUNG NOTE	SERIE AF VERSION	C
58R 40	0001-0006.793	R-KOHLE	100R 5% 0207	56	1	DRALORIC			L
58T 1	0001-0016.550	TRANS SI PNP	BCY 78 X (D) A TO 18		1	MOT			L
58T 2	0001-0016.903	TRANS SI NPN	BFY 90 A TO 72		1	SIEMENS			L
58T 3	0001-0016.903	TRANS SI NPN	BFY 90 A TO 72		1	SIEMENS			L
58T 4	0001-0016.903	TRANS SI NPN	BFY 90 A TO 72		1	SIEMENS			L
58T 5	0001-0016.929	TRANS SI PNP	2 N 2894 (BSX29) A TO 18		1	FSC			L
58UE 1	2011-7728.006	UEBERTRAGER			1				A
59C 1	0001-0040.966	ELKO-TA SINT FEST	22U 20% 16V	ETR-3 56	1	110/05/61			
59C 2	0001-0004.821	C-KERAMIK EDPT	22N 20/ 80 40V	R10000 2 56	1	110/02/10			L
59C 3	0000-7500.901	C-KERAMIK EDPT	ABGLEICHWERT	56	1	110/02/09			L
59C 4	0000-7500.901	C-KERAMIK EDPT	ABGLEICHWERT	56	1	110/02/09			I
59C 5	0001-0004.821	C-KERAMIK EDPT	22N 20/ 80 40V	R10000 2 56	1	110/02/10			I
59C 6	0001-0004.669	C-KERAMIK EDPT	470P 10% 63V	R 2000 2 56	1	110/02/10			L
59C 7	0001-0004.821	C-KERAMIK EDPT	22N 20/ 80 40V	R10000 2 56	1	110/02/10			L
59C 9	0001-0040.775	ELKO-TA SINT FEST	3U3 20% 16V	ETR-1 56	1	110/05/61			L
59C 10	0001-0004.258	C-KERAMIK EDPT	18P 2% 63V	NP 0 1B 56	1	110/02/09			L
59C 11	0001-0004.177	C-KERAMIK EDPT	10P 2% 63V	NP 0 1B 56	1	110/02/09			L
59C 12	0001-0004.698	C-KERAMIK EDPT	1N 10% 63V	R 2000 2 56	1	110/02/10			L
59C 13	0001-0004.287	C-KERAMIK EDPT	22P 2% 63V	NP 0 1B 56	1	110/02/09			L
59C 14	0001-0004.258	C-KERAMIK EDPT	18P 2% 63V	NP 0 1B 56	1	110/02/09			L
59C 15	0001-0040.966	ELKO-TA SINT FEST	22U 20% 16V	ETR-3 56	1	110/05/61			L
59C 16	0001-0040.966	ELKO-TA SINT FEST	22U 20% 16V	ETR-3 56	1	110/05/61			L
59C 17	0001-0004.384	C-KERAMIK EDPT	47P 2% 63V	NP 0 1B 56	1	110/02/09			L
59C 18	0855-0022.006	C-KERAMIK DDMZ	4N7 20/ 80 63V	D 6000 2 04	1				L
59C 19	0855-0022.006	C-KERAMIK DDMZ	4N7 20/ 80 63V	D 6000 2 04	1				L
59GL 1	0001-0018.244	DIODE SI SCHOTTKY-	HP 5082-2815 DO 35	LOSES QUARTETT AUS HP508	1	HPA			L
59GL 5	0001-0018.859	DIODE SI Z-	ZPD 5,6 DO 35		1	ITT			L
59GL 6	0001-0018.493	DIODE SI	1 N 4448 DO 35		1	ITT			L
59IC 1	0000-7580.109	IC-OP.-VERST. FET	TL061CP DIP 8		1	TEXAS			L
59L 1	0000-7556.065	L-FEST	1U2 10% 1025-22	25 7,9 150 0R18 565MA	1	117/01/03			L
59P 1	0001-0008.364	R-TRIM CERMET LIEG	1M 20% 0W5 1	TP 100 (ALT 17/02/08)	1	017/02/15			L
59R 1	0001-0006.777	R-KOHLE	82R 5% 0207	56	1	DRALORIC			L
59R 2	0001-0006.793	R-KOHLE	100R 5% 0207	56	1	DRALORIC			L
59R 3	0001-0006.858	R-KOHLE	330R 5% 0207	56	1	DRALORIC			L
59R 4	0001-0006.777	R-KOHLE	82R 5% 0207	56	1	DRALORIC			L
59R 5	0001-0007.051	R-KOHLE	15K 5% 0207	56	1	DRALORIC			L
59R 6	0001-0007.022	R-KOHLE	8K2 5% 0207	56	1	DRALORIC			L
59R 7	0001-0006.832	R-KOHLE	220R 5% 0207	56	1	DRALORIC			L
59R 9	0001-0007.116	R-KOHLE	47K 5% 0207	56	1	018/03/01			L
59R 10	0001-0006.793	R-KOHLE	100R 5% 0207	56	1	DRALORIC			L
59R 11	0001-0006.858	R-KOHLE	330R 5% 0207	56	1	DRALORIC			L
59R 12	0001-0006.971	R-KOHLE	3K3 5% 0207	56	1	DRALORIC			L

Bei Bestellung Sach-Nr. angeben!
When ordering, quote Item No.

SERIE M 2011-8401.005 OD-15 2011/01 AUSF:

TEILE-NR PART NO	SACH-NR ITEM NO	BENENNUNG DESIGNATION	BEZEICHNUNG 1 MARKING 1	BEZEICHNUNG 2 MARKING 2	MG QU	WERKNORM REF.DESIG	BEMERKUNG NOTE	SERIE AF VERSION	C
59P 13	0001-0007.145	R-KOHLE	82K 5% 0207	56	1	018/03/01			L
59R 14	0001-0007.336	R-KOHLE	3M3 5% 0207	56	1	DRALORIC			L
59P 15	0001-0006.926	R-KOHLE	1K2 5% 0207	56	1	DRALORIC			L
59R 16	0001-0007.048	R-KOHLE	12K 5% 0207	56	1	DRALORIC			L
59P 17	0001-0006.997	R-KOHLE	4K7 5% 0207	56	1	DRALORIC			L
59R 18	0001-0006.955	R-KOHLE	2K2 5% 0207	56	1	DRALORIC			L
59P 19	0001-0006.641	R-KOHLE	10R 5% 0207	56	1	DRALORIC			L
59R 20	0001-0006.641	R-KOHLE	10R 5% 0207	56	1	DRALORIC			L
59R 21	0001-0007.190	R-KOHLE	220K 5% 0207	56	1	018/03/01			L
59P 22	0001-0007.022	R-KOHLE	8K2 5% 0207	56	1	DRALORIC			L
59R 23	0001-0006.955	R-KOHLE	2K2 5% 0207	56	1	DRALORIC			L
59R 24	0001-0006.900	R-KOHLE	820R 5% 0207	56	1	DRALORIC			L
59R 25	0001-0006.900	R-KOHLE	820R 5% 0207	56	1	DRALORIC			L
59R 26	0001-0006.793	R-KOHLE	100R 5% 0207	56	1	DRALORIC			L
59P 27	0001-0006.793	R-KOHLE	100R 5% 0207	56	1	DRALORIC			L
59S 1	0000-1832.015	S-DUAL-IN-LINE	1 100 SN HAKEN-	GEK.: C42315-A1347-A124	1	SIEMENS			L
59T 1	0001-0016.929	TRANS SI PNP	2 N 2894(BSX29) A TO 18		1	FSC			L
59T 2	0001-0016.903	TRANS SI NPN	BFY 90 A TO 72		1	SIEMENS			L
59T 3	0001-0016.903	TRANS SI NPN	BFY 90 A TO 72		1	SIEMENS			L
59T 4	0001-0016.929	TRANS SI PNP	2 N 2894(BSX29) A TO 18		1	FSC			L
59T 5	0001-0016.903	TRANS SI NPN	BFY 90 A TO 72		1	SIEMENS			L
59UE 1	2011-7729.005	UEBERTRAGER			1				A
60C 1	0001-0040.720	ELKO-TA SINT FEST	1U5 20% 25V	ETR-1 56	1	110/05/61			L
60C 2	0001-0004.795	C-KERAMIK EDPT	4N7 10% 63V	R 2000 2 56	1	110/02/10			L
60C 3	0001-0004.504	C-KERAMIK EDPT	100P 2% 63V	NP 0 1B 56	1	110/02/09			L
60C 4	0001-0004.203	C-KERAMIK EDPT	12P 2% 63V	NP 0 1B 56	1	110/02/09	ABGLEICHWERT		L
60C 5	0001-0040.966	ELKO-TA SINT FEST	22U 20% 16V	ETR-3 56	1	110/05/61			L
60C 6	0001-0010.093	C-KF MKT	1U 10% 100V	MKT1813 56	1	110/03/06			L
60C 7	0001-0040.966	ELKO-TA SINT FEST	22U 20% 16V	ETR-3 56	1	110/05/61			L
60C 8	0001-0004.821	C-KERAMIK EDPT	22N 20/ 80 40V	R10000 2 56	1	110/02/10			L
60C 9	0001-0004.504	C-KERAMIK EDPT	100P 2% 63V	NP 0 1B 56	1	110/02/09			L
60C 10	0001-0004.821	C-KERAMIK EDPT	22N 20/ 80 40V	R10000 2 56	1	110/02/10			L
60C 13	0001-0004.795	C-KERAMIK EDPT	4N7 10% 63V	R 2000 2 56	1	110/02/10			L
60C 14	0001-0040.966	ELKO-TA SINT FEST	22U 20% 16V	ETR-3 56	1	110/05/61			L
60C 15	0001-0004.821	C-KERAMIK EDPT	22N 20/ 80 40V	R10000 2 56	1	110/02/10			L
60C 16	0001-0040.966	ELKO-TA SINT FEST	22U 20% 16V	ETR-3 56	1	110/05/61			L
60C 17	0001-0004.821	C-KERAMIK EDPT	22N 20/ 80 40V	R10000 2 56	1	110/02/10			L
60C 18	0001-0004.795	C-KERAMIK EDPT	4N7 10% 63V	R 2000 2 56	1	110/02/10			L
60C 19	0001-0040.704	ELKO-TA SINT FEST	1U 20% 35V	ETR-1 56	1	110/05/61			L
60C 20	0001-0004.821	C-KERAMIK EDPT	22N 20/ 80 40V	R10000 2 56	1	110/02/10			L
60C 21	0001-0004.821	C-KERAMIK EDPT	22N 20/ 80 40V	R10000 2 56	1	110/02/10			L
60C 22	0001-0040.966	ELKO-TA SINT FEST	22U 20% 16V	ETR-3 56	1	110/05/61			L
60C 23	0001-0004.203	C-KERAMIK EDPT	12P 2% 63V	NP 0 1B 56	1	110/02/09			L
60C 24	0855-0022.006	C-KERAMIK DDMZ	4N7 20/ 80 63V	D 6000 2 04	1				L
60C 25	0855-0025.003	C-KERAMIK DDMZ	4N7 20/ 80 63V	D 6000 2 04	1				L
60C 26	0855-0022.006	C-KERAMIK DDMZ	4N7 20/ 80 63V	D 6000 2 04	1				L

Bei Bestellung Sach-Nr. angeben!
When ordering, quote Item No.

SERIE M 2011-8401.005 OD-15 2011/01 AUSF:

TEILE-NR PART NO	SACH-NR ITEM NO	BENENNUNG DESIGNATION	BEZEICHNUNG 1 MARKING 1	BEZEICHNUNG 2 MARKING 2	MG QU	WERKNORM REF.DESIG	BEMERKUNG NOTE	SERIE AF VERSION	C
60GL 1	0000-7599.860	DIODE SI C-	EE 409 DO 35		1	SIEMENS			L
60GL 2	0000-7599.860	DIODE SI C-	BB 409 DO 35		1	SIEMENS			L
60GL 3	0000-7599.860	DIODE SI C-	BB 409 DO 35		1	SIEMENS			L
60GL 4	0001-0018.228	DIODE SI SCHOTTKY-	HP 5082-2800 DO 35	= 1N5711	1	HPA			L
60GL 5	0001-0018.228	DIODE SI SCHOTTKY-	HP 5082-2800 DO 35	= 1N5711	1	HPA			L
60L 1	0000-7556.133	L-FEST	4U7 10% 1025-36	42 7,9 75 1R2 210MA	1	117/01/03			L
60L 2	2011-7881.008	SPULE			1				A
60L 3	0000-7556.117	L-FEST	3U3 10% 1025-32	40 7,9 90 0R85 260MA	1	117/01/03			L
60P 1	0000-7554.096	R-TRIM CERMET LIEG	220K 20% 0W5 1	TK 100 (ALT 17/02/08)	1	017/02/15			L
60R 1	0001-0002.250	R-METALL	13K7 1% 0207	TK 50 56	1	DRALORIC	ABGLEICHWERT		L
60R 2	0001-0002.564	R-METALL	30K1 1% 0207	TK 50 56	1	DRALORIC			L
60R 3	0001-0002.755	R-METALL	49K9 1% 0207	TK 50 56	1	DRALORIC			L
60R 4	0001-0002.823	R-METALL	60K4 1% 0207	TK 50 56	1	DRALORIC			L
60R 5	0000-7601.363	R-METALL	270K 1% 0207	TK 50 56	1	DRALORIC			L
60R 6	0001-0006.777	R-KOHLE	82R 5% 0207	56	1	DRALORIC			L
60R 7	0001-0002.218	R-METALL	12K1 1% 0207	TK 50 56	1	DRALORIC			L
60R 8	0001-0007.145	R-KOHLE	82K 5% 0207	56	1	018/03/01		L-..	L
60R 9	0001-0006.913	R-KOHLE	1K 5% 0207	56	1	DRALORIC			L
60R 10	0001-0002.263	R-METALL	14K 1% 0207	TK 50 56	1	DRALORIC			L
60R 11	0001-0002.645	R-METALL	38K3 1% 0207	TK 50 56	1	DRALORIC			L
60R 12	0001-0006.816	R-KOHLE	150R 5% 0207	56	1	DRALORIC			L
60R 13	0001-0006.816	R-KOHLE	150R 5% 0207	56	1	DRALORIC			L
60R 15	0001-0006.793	R-KOHLE	100R 5% 0207	56	1	DRALORIC			L
60R 16	0001-0006.793	R-KOHLE	100R 5% 0207	56	1	DRALORIC			L
60R 17	0001-0000.906	R-METALL	402R 1% 0207	TK 50 56	1	DRALORIC			L
60R 18	0001-0000.935	R-METALL	432R 1% 0207	TK 50 56	1	DRALORIC			L
60R 19	0001-0001.374	R-METALL	1K58 1% 0207	TK 50 56	1	DRALORIC			L
60R 20	0001-0007.077	R-KOHLE	22K 5% 0207	56	1	DRALORIC			L
60R 21	0001-0000.469	R-METALL	80K6 1% 0207	TK 50 56	1	DRALORIC			L
60R 22	0001-0002.056	R-METALL	8K25 1% 0207	TK 50 56	1	DRALORIC			L
60R 23	0001-0002.467	R-METALL	23K7 1% 0207	TK 50 56	1	DRALORIC			L
60R 24	0001-0006.816	R-KOHLE	150R 5% 0207	56	1	DRALORIC			L
60R 25	0001-0006.722	R-KOHLE	47R 5% 0207	56	1	DRALORIC			L
60R 28	0001-0000.935	R-METALL	432R 1% 0207	TK 50 56	1	DRALORIC			L
60R 29	0001-0001.167	R-METALL	866R 1% 0207	TK 50 56	1	DRALORIC		B-..	L
60R 30	0001-0006.793	R-KOHLE	100R 5% 0207	56	1	DRALORIC		B-..	L
60R 31	0001-0006.913	R-KOHLE	1K 5% 0207	56	1	DRALORIC			L
60R 32	0001-0006.641	R-KOHLE	10R 5% 0207	56	1	DRALORIC			L
60R 33	0001-0006.793	R-KOHLE	100R 5% 0207	56	1	DRALORIC			L
60R 34	0001-0000.537	R-METALL	100R 1% 0207	TK 50 56	1	DRALORIC			L
60S 1	0000-1831.016	S-DUAL-IN-LINE	1 001 SN HAKEN-	GEK.: C42315-A1347-A212	1	SIEMENS			L
60T 1	0001-0016.903	TRANS SI NPN	BFY 90 A TO 72		1	SIEMENS			L
60T 2	0001-0016.518	TRANS SI NPN	BCY 59 X (D) A TO 18		1	TFK			L
60T 3	0001-0016.903	TRANS SI NPN	BFY 90 A TO 72		1	SIEMENS			L
60T 4	0001-0016.903	TRANS SI NPN	BFY 90 A TO 72		1	SIEMENS			L
60T 5	0001-0016.903	TRANS SI NPN	BFY 90 A TO 72		1	SIEMENS			L

Bei Bestellung Sach-Nr. angeben!
When ordering, quote Item No.

SERIE Nr 2011-8401.005 OD-15 2011/01 AUSF:

TEILE-NR PART NO	SACH-NR ITEM NO	BENENNUNG DESIGNATION	BEZEICHNUNG 1 MARKING 1	BEZEICHNUNG 2 MARKING 2	MG QU	WERKNORM REF.DESIG	BEMERKUNG NOTE	SERIE AF VERSION	C
60T 6	0001-0016.518	TRANS SI NPN	BCY 59 X (D) A TO 18		1	TFK			L
61C 1	0001-0040.704	ELKO-TA SINT FEST	1U 20% 35V	ETR-1 56	1	110/05/61			L
61C 2	0001-0004.821	C-KERAMIK EDPT	22N 20/ 80 40V	R10000 2 56	1	110/02/10			L
61C 3	0001-0004.656	C-KERAMIK EDPT	390P 10% 63V	R 2000 2 56	1	110/02/10			L
61C 4	0001-0004.821	C-KERAMIK EDPT	22N 20/ 80 40V	R10000 2 56	1	110/02/10			L
61C 5	0001-0040.775	ELKO-TA SINT FEST	3U3 20% 16V	ETR-1 56	1	110/05/61			L
61C 6	0001-0004.821	C-KERAMIK EDPT	22N 20/ 80 40V	R10000 2 56	1	110/02/10			L
61C 7	0001-0004.656	C-KERAMIK EDPT	390P 10% 63V	R 2000 2 56	1	110/02/10			L
61C 8	0001-0040.704	ELKO-TA SINT FEST	1U 20% 35V	ETR-1 56	1	110/05/61			L
61C 9	0001-0040.775	ELKO-TA SINT FEST	3U3 20% 16V	ETR-1 56	1	110/05/61			L
61C 10	0001-0004.559	C-KERAMIK EDPT	120P 2% 63V	NP 0 1B 56	1	110/02/09			L
61C 11	0001-0004.627	C-KERAMIK EDPT	270P 2% 63V	N 750 1B 56	1	110/02/09			L
61C 12	0001-0004.559	C-KERAMIK EDPT	120P 2% 63V	NP 0 1B 56	1	110/02/09			L
61C 13	0001-0040.704	ELKO-TA SINT FEST	1U 20% 35V	ETR-1 56	1	110/05/61			L
61C 14	0001-0004.821	C-KERAMIK EDPT	22N 20/ 80 40V	R10000 2 56	1	110/02/10			L
61C 15	0001-0004.821	C-KERAMIK EDPT	22N 20/ 80 40V	R10000 2 56	1	110/02/10			L
61C 16	0001-0004.821	C-KERAMIK EDPT	22N 20/ 80 40V	R10000 2 56	1	110/02/10			L
61C 17	0001-0004.818	C-KERAMIK EDPT	10N 20/100 40V	R10000 2 56	1	110/02/10			L
61C 18	0855-0022.006	C-KERAMIK DDMZ	4N7 20/ 80 63V	D 6000 2 04	1				L
61C 19	0855-0025.003	C-KERAMIK DDMZ	4N7 20/ 80 63V	D 6000 2 04	1				L
61C 20	0855-0022.006	C-KERAMIK DDMZ	4N7 20/ 80 63V	D 6000 2 04	1				L
61C 21	0855-0025.003	C-KERAMIK DDMZ	4N7 20/ 80 63V	D 6000 2 04	1				L
61C 22	0001-0004.067	C-KERAMIK EDPT	3P9 0P25 63V	NP 0 1B 56	1	110/02/09			L
61C 23	0001-0004.656	C-KERAMIK EDPT	390P 10% 63V	R 2000 2 56	1	110/02/10			L
61C 24	0001-0004.203	C-KERAMIK EDPT	12P 2% 63V	NP 0 1B 56	1	110/02/09			L
61IC 1	0000-7555.215	RINGMISCHER	IE-500		1	MINICIRC.			L
61L 1	0000-7556.104	L-FEST	2U7 10% 1025-30	35 7,9 100 0R55 320MA	1	117/01/03			L
61L 2	0000-7556.104	L-FEST	2U7 10% 1025-30	35 7,9 100 0R55 320MA	1	117/01/03			L
61R 2	0001-0002.072	R-METALL	8K66 1% 0207	TK 50 56	1	DRALORIC			L
61R 3	0001-0002.331	R-METALL	16K9 1% 0207	TK 50 56	1	DRALORIC			L
61R 4	0001-0006.793	R-KOHLE	100R 5% 0207	56	1	DRALORIC			L
61R 5	0001-0006.719	R-KOHLE	39R 5% 0207	56	1	DRALORIC			L
61R 6	0001-0006.683	R-KOHLE	22R 5% 0207	56	1	DRALORIC			L
61R 7	0001-0001.316	R-METALL	1K33 1% 0207	TK 50 56	1	DRALORIC			L
61R 8	0001-0000.605	R-METALL	143R 1% 0207	TK 50 56	1	DRALORIC			L
61R 9	0001-0001.361	R-METALL	1K54 1% 0207	TK 50 56	1	DRALORIC			L
61R 10	0001-0006.793	R-KOHLE	100R 5% 0207	56	1	DRALORIC	B-..		L
61R 11	0001-0000.618	R-METALL	150R 1% 0207	TK 50 56	1	DRALORIC			L
61R 12	0001-0001.617	R-METALL	2K94 1% 0207	TK 50 56	1	DRALORIC			L
61R 13	0001-0001.617	R-METALL	2K94 1% 0207	TK 50 56	1	DRALORIC	B-..		L
61R 14	0001-0001.073	R-METALL	665R 1% 0207	TK 50 56	1	DRALORIC	B-..		L
61R 15	0001-0006.793	R-KOHLE	100R 5% 0207	56	1	DRALORIC			L
61R 16	0001-0001.167	R-METALL	866R 1% 0207	TK 50 56	1	DRALORIC			L
61R 17	0001-0007.035	R-KOHLE	10R 5% 0207	56	1	DRALORIC	B-..		L
61R 18	0001-0006.793	R-KOHLE	100R 5% 0207	56	1	DRALORIC			L
61R 19	0001-0000.618	R-METALL	150R 1% 0207	TK 50 56	1	DRALORIC			L

Bei Bestellung Sach-Nr. angeben!
When ordering, quote Item No.

SERIE M 2011-8401.005 OD-15 2011/01 AUSF:

TEILE-NR PART NO	SACH-NR ITEM NO	BENENNUNG DESIGNATION	BEZEICHNUNG 1 MARKING 1			BEZEICHNUNG 2 MARKING 2		MG QU	WERKNORM REF.DESIG	BEMERKUNG NOTE	SERIE AF VERSION	C
61P 20	0001-0002.632	R-METALL	37K4	1%	0207	TK 50	56	1	DRALORIC			L
61R 21	0001-0002.438	R-METALL	21K5	1%	0207	TK 50	56	1	DRALORIC			L
61P 22	0001-0006.793	R-KOHLE	100R	5%	0207		56	1	DRALORIC			L
61R 23	0001-0006.816	R-KOHLE	150R	5%	0207		56	1	DRALORIC			L
61R 24	0001-0001.921	R-METALL	6K04	1%	0207	TK 50	56	1	DRALORIC			L
61R 25	0001-0001.086	R-METALL	681R	1%	0207	TK 50	56	1	DRALORIC			L
61R 26	0001-0000.634	R-METALL	169R	1%	0207	TK 50	56	1	DRALORIC			L
61R 27	0001-0006.641	R-KOHLE	10R	5%	0207		56	1	DRALORIC			L
61P 28	0001-0006.641	R-KOHLE	10R	5%	0207		56	1	DRALORIC			L
61R 29	0001-0006.641	R-KOHLE	10R	5%	0207		56	1	DRALORIC			L
61R 30	0001-0006.641	R-KOHLE	10R	5%	0207		56	1	DRALORIC			L
61R 31	0001-0003.518	R-METALL	47R5	1%	0207	TK 50	56	1	DRALORIC			L
61R 32	0001-0006.751	R-KOHLE	68R	5%	0207		56	1	DRALORIC			L
61T 1	0001-0016.903	TRANS SI NPN	BFY 90		A TO 72			1	SIEMENS			L
61T 2	0001-0016.903	TRANS SI NPN	BFY 90		A TO 72			1	SIEMENS		B-..	L
61T 3	0000-7536.153	TRANS SI PNP	2 N 4209		A TO 52			1	FSC			L
61T 4	0001-0016.518	TRANS SI NPN	BCY 59 X	(D)	A TO 18			1	TFK			L
61T 5	0001-0016.903	TRANS SI NPN	BFY 90		A TO 72			1	SIEMENS			L
62C 1	0001-0040.704	ELKO-TA SINT FEST	1U	20%	35V	ETR-1	56	1	110/05/61			L
62C 2	0001-0004.368	C-KERAMIK EDPT	39P	2%	63V	NP 0 1B	56	1	110/02/09			L
62C 3	0001-0040.704	ELKO-TA SINT FEST	1U	20%	35V	ETR-1	56	1	110/05/61			L
62C 4	0001-0040.966	ELKO-TA SINT FEST	22U	20%	16V	ETR-3	56	1	110/05/61			L
62C 5	0001-0004.504	C-KERAMIK EDPT	100P	2%	63V	NP 0 1B	56	1	110/02/09			L
62C 6	0001-0040.704	ELKO-TA SINT FEST	1U	20%	35V	ETR-1	56	1	110/05/61			L
62C 7	0001-0040.966	ELKO-TA SINT FEST	22U	20%	16V	ETR-3	56	1	110/05/61			L
62C 8	0001-0004.339	C-KERAMIK EDPT	33P	2%	63V	NP 0 1B	56	1	110/02/09			L
62C 9	0001-0004.177	C-KERAMIK EDPT	10P	2%	63V	NP 0 1B	56	1	110/02/09			L
62C 10	0001-0040.966	ELKO-TA SINT FEST	22U	20%	16V	ETR-3	56	1	110/05/61			L
62C 11	0001-0004.339	C-KERAMIK EDPT	33P	2%	63V	NP 0 1B	56	1	110/02/09			L
62C 13	0001-0040.704	ELKO-TA SINT FEST	1U	20%	35V	ETR-1	56	1	110/05/61			L
62C 14	0001-0040.704	ELKO-TA SINT FEST	1U	20%	35V	ETR-1	56	1	110/05/61			L
62C 15	0001-0004.821	C-KERAMIK EDPT	22N	20/ 80	40V	R10000 2	56	1	110/02/10			L
62C 16	0001-0004.601	C-KERAMIK EDPT	220P	2%	63V	N 750 1B	56	1	110/02/09			L
62C 17	0001-0040.966	ELKO-TA SINT FEST	22U	20%	16V	ETR-3	56	1	110/05/61			L
62C 18	0001-0004.821	C-KERAMIK EDPT	22N	20/ 80	40V	R10000 2	56	1	110/02/10			L
62C 19	0001-0004.779	C-KERAMIK EDPT	3N3	10%	63V	R 2000 2	56	1	110/02/10			L
62C 20	0001-0004.504	C-KERAMIK EDPT	100P	2%	63V	NP 0 1B	56	1	110/02/09			L
62C 21	0001-0040.966	ELKO-TA SINT FEST	22U	20%	16V	ETR-3	56	1	110/05/61			L
62C 22	0001-0010.323	C-KF MKT	47N	20%	250V	MKT1822	56	1	110/03/07			L
62C 24	0855-0025.003	C-KERAMIK DDMZ	4N7	20/ 80	63V	D 6000 2	04	1				L
62GL 1	0001-0018.228	DIODE SI SCHOTTKY-	HP 5082-2800		DO 35	= 1N5711		1	HPA			L
62GL 2	0001-0064.104	DIODE SI STABI-	ZTE 2		DO 35			1	ITT			L
62IC 1	0000-7576.935	IC-DUAL OPVERST. FET	TL062CP		DIP 8			1	TEXAS			L
62IC 2	0001-0065.695	IC-TTL	74LS00N		DIP 14			1	TEXAS			L
62IC 3	0001-0065.695	IC-TTL	74LS00N		DIP 14			1	TEXAS			L
62IC 4	0001-0066.238	IC-TTL	74LS20N		DIP 14			1	TEXAS			L

Bei Bestellung Sach-Nr. angeben!
When ordering, quote Item No.

SERIE M 2011-8401.005 0D-15 2011/01 AUSF:

TEILE-NR PART NO	SACH-NR ITEM NO	BENENNUNG DESIGNATION	BEZEICHNUNG 1 MARKING 1	BEZEICHNUNG 2 MARKING 2	MG QU	WERKNORM REF.DESIG	BEMERKUNG NOTE	SERIE AF VERSION	C
62IC 5	0001-0066.034	IC-TTL	74LS10N DIP 14		1	TEXAS			L
62IC 6	0000-7590.173	IC-KOMPARATOR DUAL	LM393N DIP 8		1	NSC			L
62IC 7	0000-7565.959	IC-OP.-VERST. FET	TL071CP DIP 8		1	TEXAS			L
62L 1	0000-7556.298	L-FEST	100U 10% 1025-68	45 2,5 13 8R 80MA	1	117/01/03			L
62L 2	0000-7556.298	L-FEST	100U 10% 1025-68	45 2,5 13 8R 80MA	1	117/01/03			L
62R 1	0001-0001.002	R-METALL	549R 1% 0207	TK 50 56	1	DRALORIC			L
62R 2	0001-0062.326	R-METALL	34K8 1% 0207	TK 50 56	1	DRALORIC			L
62R 3	0001-0002.409	R-METALL	20K 1% 0207	TK 50 56	1	DRALORIC			L
62R 4	0001-0006.793	R-KOHLE	100R 5% 0207	56	1	DRALORIC			L
62R 5	0001-0001.662	R-METALL	3K32 1% 0207	TK 50 56	1	DRALORIC			L
62R 6	0001-0001.688	R-METALL	3K48 1% 0207	TK 50 56	1	DRALORIC			L
62R 7	0001-0001.455	R-METALL	2K 1% 0207	TK 50 56	1	DRALORIC			L
62R 8	0001-0006.793	R-KOHLE	100R 5% 0207	56	1	DRALORIC			L
62R 9	0001-0006.793	R-KOHLE	100R 5% 0207	56	1	DRALORIC			L
62R 10	0001-0001.662	R-METALL	3K32 1% 0207	TK 50 56	1	DRALORIC			L
62R 11	0001-0006.751	R-KOHLE	68R 5% 0207	56	1	DRALORIC			L
62R 12	0001-0001.510	R-METALL	2K32 1% 0207	TK 50 56	1	DRALORIC			L
62R 13	0001-0000.980	R-METALL	499R 1% 0207	TK 50 56	1	DRALORIC			L
62R 14	0001-0006.858	R-KOHLE	330R 5% 0207	56	1	DRALORIC			L
62R 16	0001-0006.874	R-KOHLE	470R 5% 0207	56	1	DRALORIC			L
62R 17	0001-0007.035	R-KOHLE	10K 5% 0207	56	1	DRALORIC			L
62R 18	0001-0006.751	R-KOHLE	68R 5% 0207	56	1	DRALORIC			L
62R 19	0001-0001.510	R-METALL	2K32 1% 0207	TK 50 56	1	DRALORIC			L
62R 20	0001-0000.980	R-METALL	499R 1% 0207	TK 50 56	1	DRALORIC			L
62R 21	0001-0001.620	R-METALL	3K01 1% 0207	TK 50 56	1	DRALORIC			L
62R 22	0001-0002.331	R-METALL	16K9 1% 0207	TK 50 56	1	DRALORIC			L
62R 23	0001-0002.409	R-METALL	20K 1% 0207	TK 50 56	1	DRALORIC			L
62R 24	0001-0002.564	R-METALL	30K1 1% 0207	TK 50 56	1	DRALORIC			L
62R 25	0001-0002.137	R-METALL	10K 1% 0207	TK 50 56	1	DRALORIC			L
62R 26	0001-0007.035	R-KOHLE	10K 5% 0207	56	1	DRALORIC			L
62R 29	0001-0007.035	R-KOHLE	10K 5% 0207	56	1	DRALORIC			L
62R 30	0001-0007.035	R-KOHLE	10K 5% 0207	56	1	DRALORIC			L
62R 31	0001-0001.879	R-METALL	5K36 1% 0207	TK 50 56	1	DRALORIC			L
62R 32	0001-0001.455	R-METALL	2K 1% 0207	TK 50 56	1	DRALORIC			L
62R 33	0001-0002.247	R-METALL	13K3 1% 0207	TK 50 56	1	DRALORIC			L
62R 34	0001-0001.808	R-METALL	4K64 1% 0207	TK 50 56	1	DRALORIC			L
62R 35	0001-0002.331	R-METALL	16K9 1% 0207	TK 50 56	1	DRALORIC			L
62R 36	0001-0006.793	R-KOHLE	100R 5% 0207	56	1	DRALORIC			L
62R 37	0001-0006.793	R-KOHLE	100R 5% 0207	56	1	DRALORIC			L
62R 38	0001-0006.641	R-KOHLE	10R 5% 0207	56	1	DRALORIC			L
62R 39	0001-0001.976	R-METALL	6K81 1% 0207	TK 50 56	1	DRALORIC			L
62R 40	0001-0001.976	R-METALL	6K81 1% 0207	TK 50 56	1	DRALORIC			L
62R 41	0001-0006.793	R-KOHLE	100R 5% 0207	56	1	DRALORIC			L
62R 42	0001-0006.793	R-KOHLE	100R 5% 0207	56	1	DRALORIC			L
62R 43	0001-0002.580	R-METALL	31K6 1% 0207	TK 50 56	1	DRALORIC			L
62R 44	0001-0002.535	R-METALL	28K 1% 0207	TK 50 56	1	DRALORIC			L
62R 45	0001-0002.580	R-METALL	31K6 1% 0207	TK 50 56	1	DRALORIC			L
62R 46	0001-0002.975	R-METALL	90K9 1% 0207	TK 50 56	1	DRALORIC			L
62R 47	0001-0003.822	R-METALL	110K 1% 0207	TK 50 56	1	DRALORIC			L

Bei Bestellung Sach-Nr. angeben!
When ordering, quote Item No.

SERIE M 2011-8401.005 OD-15 2011/01 AUSF:

TEILE-NR PART NO	SACH-NR ITEM NO	BENENNUNG DESIGNATION	BEZEICHNUNG 1 MARKING 1	BEZEICHNUNG 2 MARKING 2	MG QU	WERKNORM REF.DESIG	BEMERKUNG NOTE	SERIE AF VERSION	C
62R 48	0001-0006.793	R-KOHLE	100R 5% 0207	56	1	DRALORIC			L
62R 49	0001-0001.455	R-METALL	2K 1% 0207	TK 50 56	1	DRALORIC			L
62R 50	0001-0001.426	R-METALL	1K87 1% 0207	TK 50 56	1	DRALORIC			L
62R 51	0001-0006.913	R-KOHLE	1K 5% 0207	56	1	DRALORIC			L
62R 52	0001-0001.743	R-METALL	4K02 1% 0207	TK 50 56	1	DRALORIC			L
62R 53	0001-0006.793	R-KOHLE	100R 5% 0207	56	1	DRALORIC			L
62R 54	0001-0001.219	R-METALL	1K 1% 0207	TK 50 56	1	DRALORIC			L
62R 55	0001-0006.913	R-KOHLE	1K 5% 0207	56	1	DRALORIC			L
62R 57	0001-0000.537	R-METALL	100R 1% 0207	TK 50 56	1	DRALORIC			L
62R 58	0001-0007.158	R-KOHLE	100K 5% 0207	56	1	018/03/01			L
62R 59	0001-0007.093	R-KOHLE	33K 5% 0207	56	1	018/03/01			L
62T 1	0001-0016.518	TRANS SI NPN	BCY 59 X (D) A TO 18		1	TFK			L
62T 2	0001-0016.518	TRANS SI NPN	BCY 59 X (D) A TO 18		1	TFK			L
62T 3	0001-0016.712	TRANS SI PNP	2 N 4035 (BFX48) A TO 18		1	SGS			L
62T 4	0001-0016.712	TRANS SI PNP	2 N 4035 (BFX48) A TO 18		1	SGS			L
62T 5	0001-0016.712	TRANS SI PNP	2 N 4035 (BFX48) A TO 18		1	SGS			L
62T 6	0001-0016.987	TRANS SI NPN	2 N 2369 (BSX93) A TO 18		1	FSC			L
62T 7	0001-0016.712	TRANS SI PNP	2 N 4035 (BFX48) A TO 18		1	SGS			L
62T 8	0001-0016.987	TRANS SI NPN	2 N 2369 (BSX93) A TO 18		1	FSC			L
62T 9	0001-0016.518	TRANS SI NPN	BCY 59 X (D) A TO 18		1	TFK			L
62T 10	0001-0016.631	TRANS SI N JFET	BF 245 C D SOT 54		1	VALVO			L
62T 11	0001-0016.550	TRANS SI PNP	BCY 78 X (D) A TO 18		1	MOT			L
62T 12	0001-0016.550	TRANS SI PNP	BCY 78 X (D) A TO 18		1	MOT			L
63C 1	0001-0004.821	C-KERAMIK EDPT	22N 20/-80 40V	R10000 2 56	1	110/02/10			L
63C 2	0001-0004.795	C-KERAMIK EDPT	4N7 10% 63V	R 2000 2 56	1	110/02/10			L
63C 3	0001-0040.966	ELKO-TA SINT FEST	22U 20% 16V	ETR-3 56	1	110/05/61			L
63C 4	0001-0004.067	C-KERAMIK EDPT	3P9 0P25 63V	NP 0 1B 56	1	110/02/09		C-..	L
63R 1	0001-0006.816	R-KOHLE	150R 5% 0207	56	1	DRALORIC			L
63R 2	0001-0006.793	R-KOHLE	100R 5% 0207	56	1	DRALORIC			L
63R 3	0001-0001.219	R-METALL	1K 1% 0207	TK 50 56	1	DRALORIC			L
63R 4	0001-0000.375	R-METALL	60R4 1% 0207	TK 50 56	1	DRALORIC			L
63R 5	0001-0006.793	R-KOHLE	100R 5% 0207	56	1	DRALORIC			L
63R 6	0001-0006.913	R-KOHLE	1K 5% 0207	56	1	DRALORIC			L
63ST 1	0855-0006.006	STECKER	BN 855 A 1 KPL		1				L
63T 1	0001-0016.903	TRANS SI NPN	BFY 90 A TO 72		1	SIEMENS			L
63T 2	0001-0016.518	TRANS SI NPN	BCY 59 X (D) A TO 18		1	TFK			L

Bei Bestellung Sach-Nr. angeben!
When ordering, quote Item No.

2.1	Batteriezusatz BAZ-15	BN 955/00.01
2.1	Battery Pack BAZ-15	BN 955/00.01
2.1	Auxiliaire batterie BAZ-15	BN 955/00.01

SERIE H 0955-8400.014 OPTION 955/00/01 AUSF:

BN 955/00.01

TEILE-NR PART NO	SACH-NR ITEM NO	BENENNUNG DESIGNATION	BEZEICHNUNG 1 MARKING 1	BEZEICHNUNG 2 MARKING 2	MG QU	WERKNORM REF.DESIG	BEMERKUNG NOTE	SERIE AF VERSION	C
1ST 2	0000-7614.965	EINBAUSTECKER	3 A1 V EB LT 4	MASEI 3	1	HIRSCHMAN			L

Bei Bestellung Sach-Nr. angeben!
When ordering, quote Item No.

2.2

2.2	Mitlaufsender PSE-15	BN 955/00.02
2.2	Tracking Generator PSE-15	BN 955/00.02
2.2	Générateur suiveur PSE-15	BN 955/00.02

SERIE N 0955-8400.027 OPTION 955/00.02 AUSF:

BN 955/00.02

TEILE-NR PART NO	SACH-NR ITEM NO	BENENNUNG DESIGNATION	BEZEICHNUNG 1 MARKING 1	BEZEICHNUNG 2 MARKING 2	MG QU	WERKNORM REF.DESIG	BEMERKUNG NOTE	SERIE AF VERSION	C
23C 1	0001-0004.384	C-KERAMIK EDPT	47P 2% 63V	NP 0 1B 56	1	110/02/09		E-..	L
23C 3	0001-0004.148	C-KERAMIK EDPT	8P2 0P25 63V	NP 0 1B 56	1	110/02/09		E-..	L
23C 4	0001-0004.478	C-KERAMIK EDPT	82P 2% 63V	NP 0 1B 56	1	110/02/09		E-..	L
23C 5	0001-0004.478	C-KERAMIK EDPT	82P 2% 63V	NP 0 1B 56	1	110/02/09		E-..	L
23C 8	0001-0004.009	C-KERAMIK EDPT	2P2 0P25 63V	NP 0 1B 56	1	110/02/09		E-..	L
23C 9	0001-0004.504	C-KERAMIK EDPT	100P 2% 63V	NP 0 1B 56	1	110/02/09		E-..	L
23C 11	0001-0040.995	ELKO-TA SINT FEST	33U 20% 10V	ETR-3 56	1	110/05/61		E-..	L
23C 12	0001-0040.995	ELKO-TA SINT FEST	33U 20% 10V	ETR-3 56	1	110/05/61		E-..	L
23C 13	0000-7588.143	C-KERAMIK KDPU	1U 20% 50V	Z5U VP44BY105MA	1	VITRAMON		E-..	L
23C 14	0001-0040.801	ELKO-TA SINT FEST	4U7 20% 10V	ETR-1 56	1	110/05/61		E-..	L
23C 15	0000-7588.143	C-KERAMIK KDPU	1U 20% 50V	Z5U VP44BY105MA	1	VITRAMON		E-..	L
23C 16	0001-0041.208	ELKO-TA SINT FEST	220U 20% 10V	ETR-5 56	1	110/05/61		E-..	L
23C 18	0001-0068.401	C-TRIM KER SCHEIBE	4P5- 20P N 750 0,5	VI 301427502 21	1	111/01/06		E-..	L
23C 19	0001-0041.114	ELKO-TA SINT FEST	68U 20% 16V	ETR-4 56	1	110/05/61		E-..	L
23C 20	0001-0041.198	ELKO-TA SINT FEST	150U 20% 16V	ETR-5 56	1	110/05/61		E-..	L
23C 21	0000-7547.223	C-TRIM KER SCHEIBE	2P5- 5P NP 0 0,5	PKT BR 301504111 21	1	111/01/05		E-..	L
23C 26	0001-0040.966	ELKO-TA SINT FEST	22U 20% 16V	ETR-3 56	1	110/05/61		E-..	L
23C 27	0001-0040.966	ELKO-TA SINT FEST	22U 20% 16V	ETR-3 56	1	110/05/61		E-..	L
23C 28	0000-7646.302	ELKO-AL	2200U 20% 16V	22220?115222 56	1	VALVO		G-..	L
23C 29	0001-0041.185	ELKO-TA SINT FEST	150U 20% 6V3	ETR-4 56	1	110/05/61		E-..	L
23C 31	0001-0040.830	ELKO-TA SINT FEST	68U 20% 6V3	ETR-1 56	1	110/05/61		E-..	L
23C 32	0001-0040.704	ELKO-TA SINT FEST	1U 20% 35V	ETR-1 56	1	110/05/61		E-..	L
23C 33	0001-0041.208	ELKO-TA SINT FEST	220U 20% 10V	ETR-5 56	1	110/05/61		E-..	L
23C 39	0001-0041.790	ELKO-AL	100U 10/ 50 16V	B41588 56	1	110/05/40		E-..	L
23C 40	0001-0004.821	C-KERAMIK EDPT	22N 20/ 80 40V	R10000 2 56	1	110/02/10		E-..	L
23C 41	0000-7600.995	C-KERAMIK KBRU	220N 20/ 80 50V	Z5U CAC04Z5U224Z050A	1	CORNING		E-..	L
23C 42	0000-7600.995	C-KERAMIK KBRU	220N 20/ 80 50V	Z5U CAC04Z5U224Z050A	1	CORNING		E-..	L
23C 43	0000-7600.995	C-KERAMIK KBRU	220N 20/ 80 50V	Z5U CAC04Z5U224Z050A	1	CORNING		E-..	L
23C 44	0000-7600.995	C-KERAMIK KBRU	220N 20/ 80 50V	Z5U CAC04Z5U224Z050A	1	CORNING		E-..	L
23C 45	0000-7600.995	C-KERAMIK KBRU	220N 20/ 80 50V	Z5U CAC04Z5U224Z050A	1	CORNING		E-..	L
23C 46	0001-0004.821	C-KERAMIK EDPT	22N 20/ 80 40V	R10000 2 56	1	110/02/10		E-..	L
23C 47	0001-0004.821	C-KERAMIK EDPT	22N 20/ 80 40V	R10000 2 56	1	110/02/10		E-..	L
23C 48	0000-7600.995	C-KERAMIK KBRU	220N 20/ 80 50V	Z5U CAC04Z5U224Z050A	1	CORNING		E-..	L
23C 49	0000-7600.995	C-KERAMIK KBRU	220N 20/ 80 50V	Z5U CAC04Z5U224Z050A	1	CORNING		E-..	L
23C 50	0001-0004.821	C-KERAMIK EDPT	22N 20/ 80 40V	R10000 2 56	1	110/02/10		E-..	L
23C 51	0000-7600.995	C-KERAMIK KBRU	220N 20/ 80 50V	Z5U CAC04Z5U224Z050A	1	CORNING		E-..	L
23C 52	0001-0040.995	ELKO-TA SINT FEST	33U 20% 10V	ETR-3 56	1	110/05/61		E-..	L
23C 53	0001-0004.818	C-KERAMIK EDPT	10N 20/100 40V	R10000 2 56	1	110/02/10		E-..	L
23C 54	0001-0004.818	C-KERAMIK EDPT	10N 20/100 40V	R10000 2 56	1	110/02/10		E-..	L
23C 55	0001-0004.818	C-KERAMIK EDPT	10N 20/100 40V	R10000 2 56	1	110/02/10		E-..	L
23C 56	0001-0004.818	C-KERAMIK EDPT	10N 20/100 40V	R10000 2 56	1	110/02/10		E-..	L
23C 57	0001-0004.818	C-KERAMIK EDPT	10N 20/100 40V	R10000 2 56	1	110/02/10		E-..	L
23C 58	0001-0004.818	C-KERAMIK EDPT	10N 20/100 40V	R10000 2 56	1	110/02/10		E-..	L
23C 59	0001-0004.818	C-KERAMIK EDPT	10N 20/100 40V	R10000 2 56	1	110/02/10		E-..	L
23C 60	0001-0004.818	C-KERAMIK EDPT	10N 20/100 40V	R10000 2 56	1	110/02/10		E-..	L
23C 61	0001-0040.720	ELKO-TA SINT FEST	1U5 20% 25V	ETR-1 56	1	110/05/61		E-..	L
23C 401	0000-7513.189	C-KF MKU	4U7 10% 63V	B32110 56	1	SIEMENS			L
23C 402	0855-0021.007	C-KERAMIK DDMZ	4N7 20/ 80 63V	D 6000 2 04	1				L
23C 403	0855-0021.007	C-KERAMIK EDMZ	4N7 20/ 80 63V	D 6000 2 04	1				L
23C 501	0000-7519.277	ELKO-AL	47U 10/ 50 25V	B41588 56	1	110/05/40			L
23C 502	0001-0041.732	ELKO-AL	47U 10/ 50 10V	B41588 56	1	110/05/40			L

Bei Bestellung Sach-Nr. angeben!
When ordering, quote Item No.

S C H A L T T E I L L I S T E / P A R T - L I S T

SERIE N 0955-8400.027 OPTION 955/00.02 AUSF:

TEILE-NR PART NO	SACH-NR ITEM NO	BENENNUNG DESIGNATION	BEZEICHNUNG 1 MARKING 1	BEZEICHNUNG 2 MARKING 2	MG QU	WERKNORM REF.DESIG	BEMERKUNG NOTE	SERIE AF VERSION	C
23C 503	0855-0022.006	C-KERAMIK DDMZ	4N7 20/ 80 63V	D 6000 2 04	1				L
23C 504	0855-0022.006	C-KERAMIK DDMZ	4N7 20/ 80 63V	D 6000 2 04	1				L
23GL 1	0001-0018.493	DIODE SI	1 N 4448 DO 35		1	ITT		E-..	L
23GL 2	0000-7531.860	DIODE SI REFERENZ	1 N 4572 A DO 7		1	140/03/03		E-..	L
23GL 3	0001-0018.493	DIODE SI	1 N 4448 DO 35		1	ITT		E-..	L
23IC 1	0000-7579.149	IC-OP.-VERST.	NE5539N DIP 14	(TDA 1078)	1	VALVO		E-..	L
23IC 2	0000-7567.025	IC-OP.-VERST. FET	TL081CP DIP 8		1	MOTOROLA		E-..	L
23IC 11	0001-0015.988	IC-CMOS	4011BCP DIP 14	MOS	1	MOTOROLA		E-..	L
23IC 12	0001-0067.567	IC-CMOS	4028BCP DIP 16	MOS	1	MOTOROLA		E-..	L
23IC 13	0001-0070.884	IC-CMOS	4081BCP DIP 14	MOS	1	MOTOROLA		E-..	L
23IC 14	0000-7609.585	IC-D/A-WANDLER	AD7545KN DIP 20	MOS	1	ANAL. DEV		E-..	L
23IC 15	0000-7576.650	IC-OP.-VERST.	OP20HP DIP 8		1	PMI		E-..	L
23IC 16	0000-7576.650	IC-OP.-VERST.	OP20HP DIP 8		1	PMI		E-..	L
23IC 17	0000-7580.921	IC-LOCMOS	40374BP DIP 20	858521	1	VALVO		E-..	L
23IC 18	0001-0072.390	IC-LOCMOS	40098BP DIP 16	858521	1	VALVO		E-..	L
23IC 19	000C-7580.921	IC-LOCMOS	40374BP DIP 20	858521	1	VALVO		E-..	L
23IC 20	0001-0072.390	IC-LOCMOS	40098BP DIP 16	858521	1	VALVO		E-..	L
23IC 21	0001-0072.390	IC-LOCMOS	40098BP DIP 16	858521	1	VALVO		E-..	L
23IC 501	0000-7618.602	IC-DC/DC-WANDLER	V5R15 DIP 24		1	RELIABILTY			L
23L 1	0955-7887.007	SPULE			1			E-..	A
23L 2	0955-7888.006	SPULE			1			E-..	A
23L 3	0001-0042.964	L-FEST	10U 10% 1537-36	55 7,9 45 0R9 290MA	1	117/01/02		E-..	L
23L 4	0000-7556.052	L-FEST	1U 10% 1025-20	25 25 230 1R1 385MA	1	117/01/03		E-..	L
23L 5	0000-7556.146	L-FEST	5U6 10% 1025-38	45 7,9 65 1R8 190MA	1	117/01/03		E-..	L
23L 6	0001-0043.125	L-FEST	100N 10% 1025-94	38 25 650 R08 1A2	1	117/01/03		E-..	L
23L 7	0001-0042.964	L-FEST	10U 10% 1537-36	55 7,9 45 0R9 290MA	1	117/01/02		E-..	L
23L 401	0001-0042.430	L-FUNKENTSTOER	6U 20% B82111-A-C4	75 0R19 1A5	1	SIEMENS			L
23L 402	0001-0042.430	L-FUNKENTSTOER	6U 20% B82111-A-C4	75 0R19 1A5	1	SIEMENS			L
23P 2	0000-7571.710	R-TRIM CERMET SQUARE	200R 10% 0W2 20	TK 100 T93YA 56	1	017/04/06		E-..	L
23P 3	0000-7571.736	R-TRIM CERMET SQUARE	2K 10% 0W2 20	TK 100 T93YA 56	1	017/04/06		E-..	L
23R 1	0001-0003.819	R-METALL	226R 1% 0207	TK 50 56	1	DRALORIC		E-..	L
23R 2	0001-0001.400	R-METALL	1K74 1% 0207	TK 50 56	1	DRALORIC		E-..	L
23R 3	0001-0006.641	R-KOHLE	10R 5% 0207	56	1	DRALORIC		E-..	L
23R 4	0001-0006.641	R-KOHLE	10R 5% 0207	56	1	DRALORIC		E-..	L
23R 5	0001-0065.268	R-METALL	45R3 1% 0207	TK 50 56	1	DRALORIC		E-..	L
23R 6	0001-0002.409	R-METALL	20K 1% 0207	TK 50 56	1	DRALORIC		E-..	L
23R 7	0001-0002.409	R-METALL	20K 1% 0207	TK 50 56	1	DRALORIC		E-..	L
23R 8	0001-0006.751	R-KOHLE	68R 5% 0207	56	1	DRALORIC		E-..	L
23P 9	0001-0062.326	R-METALL	34K8 1% 0207	TK 50 56	1	DRALORIC		E-..	L
23R 10	0001-0002.438	R-METALL	21K5 1% 0207	TK 50 56	1	DRALORIC		E-..	L
23R 11	0001-0006.683	R-KOHLE	22R 5% 0207	56	1	DRALORIC		E-..	L
23R 13	0001-0000.676	R-METALL	200R 1% 0207	TK 50 56	1	DRALORIC		E-..	L
23R 14	0001-0000.537	R-METALL	100R 1% 0207	TK 50 56	1	DRALORIC		E-..	L
23R 15	0001-0001.581	R-METALL	2K74 1% 0207	TK 50 56	1	DRALORIC		E-..	L
23R 16	0001-0001.099	R-METALL	698R 1% 0207	TK 50 56	1	DRALORIC		E-..	L
23R 17	0001-0001.235	R-METALL	1K1 1% 0207	TK 50 56	1	DRALORIC		E-..	L

Bei Bestellung Sach-Nr. angeben!
When ordering, quote Item No.

SERIE N 0955-8400.027 OPTION 955/00.02 AUSF:

TEILE-NR PART NO	SACH-NR ITEM NO	BENENNUNG DESIGNATION	BEZEICHNUNG 1 MARKING 1			BEZEICHNUNG 2 MARKING 2		MG GU	WERKNORM REF.DESIG	BEMERKUNG NOTE	SERIE AF VERSION	C
23R 18	0000-7511.660	R-METALL	681R	0%1	0207	TK 15	56	1	018/04/01		E-..	L
23R 20	0000-7608.683	R-METALL	215R	0%1	0207	TK 15	56	1	018/04/01		E-..	L
23R 21	0001-0003.071	R-METALL	133K	1%	0207	TK 50	56	1	DRALORIC		E-..	L
23R 22	0000-7511.136	R-METALL	100R	0%1	0207	TK 15	56	1	018/04/01		E-..	L
23R 23	0001-0002.483	R-METALL	24K9	1%	0207	TK 50	56	1	DRALORIC		E-..	L
23R 24	0001-0000.702	R-METALL	215R	1%	0207	TK 50	56	1	DRALORIC		E-..	L
23R 25	0000-7644.003	R-METALL	127R	1%	0204	TK 50	56	1	018/04/01		E-..	L
23R 26	0001-0007.035	R-KOHLE	10R	5%	0207		56	1	DRALORIC		E-..	L
23R 31	0001-0001.824	R-METALL	4K75	1%	0207	TK 50	56	1	DRALORIC		E-..	L
23R 32	0001-0001.769	R-METALL	4K22	1%	0207	TK 50	56	1	DRALORIC		E-..	L
23R 33	0001-0002.399	R-METALL	19K6	1%	0207	TK 50	56	1	DRALORIC		E-..	L
23R 34	0001-0006.751	R-KOHLE	68R	5%	0207		56	1	DRALORIC		E-..	L
23R 35	0001-0001.345	R-METALL	1K47	1%	0207	TK 50	56	1	DRALORIC		E-..	L
23R 36	0001-0006.751	R-KOHLE	68R	5%	0207		56	1	DRALORIC		E-..	L
23R 37	0001-0003.592	R-METALL	365R	1%	0207	TK 50	56	1	DRALORIC		E-..	L
23R 38	0001-0018.587	R-METALL	845R	1%	0207	TK 50	56	1	DRALORIC		E-..	L
23R 39	0001-0003.589	R-METALL	294R	1%	0207	TK 50	56	1	DRALORIC		E-..	L
23R 40	0001-0001.099	R-METALL	698R	1%	0207	TK 50	56	1	DRALORIC		E-..	L
23R 42	0001-0006.751	R-KOHLE	68R	5%	0207		56	1	DRALORIC		E-..	L
23R 43	0001-0001.455	R-METALL	2K	1%	0207	TK 50	56	1	DRALORIC		E-..	L
23R 44	0001-0001.798	R-METALL	4K53	1%	0207	TK 50	56	1	DRALORIC		E-..	L
23R 45	0001-0001.125	R-METALL	750R	1%	0207	TK 50	56	1	DRALORIC		E-..	L
23R 46	0001-0006.793	R-KOHLE	100R	5%	0207		56	1	DRALORIC		E-..	L
23R 47	0001-0006.751	R-KOHLE	68R	5%	0207		56	1	DRALORIC		E-..	L
23R 48	0001-0000.375	R-METALL	60R4	1%	0207	TK 50	56	1	DRALORIC		E-..	L
23R 49	0001-0065.255	R-METALL	44R2	1%	0207	TK 50	56	1	DRALORIC		E-..	L
23R 50	0000-7512.478	R-METALL	113R	0%1	0207	TK 15	56	1	018/04/01		E-..	L
23R 51	0001-0002.137	R-METALL	10K	1%	0207	TK 50	56	1	DRALORIC		E-..	L
23R 52	0001-0000.058	R-METALL	8R06	1%	0207	TK 50	56	1	DRALORIC		E-..	L
23R 53	0001-0003.550	R-METALL	42R2	1%	0207	TK 50	56	1	DRALORIC		E-..	L
23R 54	0001-0001.549	R-METALL	2K49	1%	0207	TK 50	56	1	DRALORIC		E-..	L
23R 55	0000-7569.696	R-METALL	147R	0%1	0207	TK 15	56	1	018/04/01		E-..	L
23R 56	0000-7500.930	R-METALL	ABGLEICHWERT	1%	0207	TK 50	56	1	DRALORIC	ABGLEICHWERT	E-..	I
23R 57	0001-0016.783	R-METALL	5R11	1%	0207	TK 50	56	1	DRALORIC		E-..	L
23R 58	0001-0060.674	R-METALL	5R23	1%	0207	TK 50	56	1	DRALORIC		E-..	L
23R 59	0001-0063.820	R-METALL	7R15	1%	0207	TK 50	56	1	DRALORIC		E-..	L
23R 60	0001-0063.820	R-METALL	7R15	1%	0207	TK 50	56	1	DRALORIC		E-..	L
23R 61	0000-7647.495	R-METALL	4R87	1%	0204	TK 50	56	1	018/04/01		E-..	L
23R 62	0000-7647.495	R-METALL	4R87	1%	0204	TK 50	56	1	018/04/01		E-..	L
23R 70	0001-0006.641	R-KOHLE	10R	5%	0207		56	1	DRALORIC		E-..	L
23R 71	0001-0006.641	R-KOHLE	10R	5%	0207		56	1	DRALORIC		E-..	L
23R 72	0001-0006.641	R-KOHLE	10R	5%	0207		56	1	DRALORIC		E-..	L
23R 73	0001-0006.641	R-KOHLE	10R	5%	0207		56	1	DRALORIC		E-..	L
23R 74	0001-0006.641	R-KOHLE	10R	5%	0207		56	1	DRALORIC		E-..	L
23R 75	0001-0006.641	R-KOHLE	10R	5%	0207		56	1	DRALORIC		E-..	L
23R 76	0001-0006.641	R-KOHLE	10R	5%	0207		56	1	DRALORIC		E-..	L
23R 77	0001-0006.641	R-KOHLE	10R	5%	0207		56	1	DRALORIC		E-..	L
23R 78	0001-0006.719	R-KOHLE	39R	5%	0207		56	1	DRALORIC		E-..	L
23R 79	0001-0006.719	R-KOHLE	39R	5%	0207		56	1	DRALORIC		E-..	L
23R 80	0001-0006.719	R-KOHLE	39R	5%	0207		56	1	DRALORIC		E-..	L
23R 81	0001-0006.641	R-KOHLE	10R	5%	0207		56	1	DRALORIC		E-..	L

Bei Bestellung Sach-Nr. angeben!
When ordering, quote Item No.

SERIE N 0955-8400.027 OPTION 955/00.02 AUSF:

TEILE-NR PART NO	SACH-NR ITEM NO	BENENNUNG DESIGNATION	BEZEICHNUNG 1 MARKING 1	BEZEICHNUNG 2 MARKING 2	MG QU	WERKNORM REF.DESIG	BEMERKUNG NOTE	SERIE AF VERSION	C
23R 82	0000-7541.494	R-MODUL	9X100K 5% 0W1	TK250 EXB-F10E-104J	1	018/06/01		E-..	L
23R 83	0000-7541.494	R-MODUL	9X100K 5% 0W1	TK250 EXB-F10E-104J	1	018/06/01		E-..	L
23R 84	0001-0001.727	R-METALL	3k83 1% 0207	TK 50 56	1	DRALORIC		E-..	L
23R 85	0001-0001.879	R-METALL	5k36 1% 0207	TK 50 56	1	DRALORIC		E-..	L
23R 86	0001-0001.950	R-METALL	6k49 1% 0207	TK 50 56	1	DRALORIC		E-..	L
23R 88	0001-0000.537	R-METALL	100R 1% 0207	TK 50 56	1	DRALORIC		E-..	L
23R 89	0000-7541.494	R-MODUL	9X100K 5% 0W1	TK250 EXB-F10E-104J	1	018/06/01		E-..	L
23R 90	0001-0002.137	R-METALL	10K 1% 0207	TK 50 56	1	DRALORIC		E-..	L
23R 91	0001-0002.991	R-METALL	100K 1% 0207	TK 50 56	1	DRALORIC		E-..	L
23R 92	0001-0002.991	R-METALL	100K 1% 0207	TK 50 56	1	DRALORIC		E-..	L
23REL 1	0000-7619.326	RELAIS GEPOLT BISTAB	001 AU 12V 1K5 HD	RSL12V	1	SDS		E-..	L
23REL 2	0000-7619.326	RELAIS GEPOLT BISTAB	001 AU 12V 1K5 HD	RSL12V	1	SDS		E-..	L
23REL 3	0000-7610.707	RELAIS GEPOLT BISTAB	002 AU 12V 1K4 SD	DS2E-L-12V	1	SDS		E-..	L
23REL 4	0000-7610.707	RELAIS GEPOLT BISTAB	002 AU 12V 1K4 SD	DS2E-L-12V	1	SDS		E-..	L
23T 1	0000-7536.153	TRANS SI PNP	2 N 4209 A TO 52		1	FSC		E-..	L
23T 2	0001-0016.903	TRANS SI NPN	BFY 90 A TO 72		1	SIEMENS		E-..	L
23T 3	0001-0016.903	TRANS SI NPN	BFY 90 A TO 72		1	SIEMENS		E-..	L
23T 4	0001-0017.601	TRANS SI NPN	2 N 5109 A TO 39		1	MOTOROLA		E-..	L
23T 5	0001-0017.601	TRANS SI NPN	2 N 5109 A TO 39		1	MOTOROLA		E-..	L
23T 6	0000-7610.765	TRANS SI N VMOS	BUZ 10 B TO 220	MOS	1	VAL 0983		E-..	L
23UE 2	0955-7702.001	UEBERTRAGER			1				A
25C 1	0001-0069.468	C-TRIM KER SCHEIBE	7P - 35P N1500 0,5	OR 301427603 21	1	111/01/06		E-..	L
25C 4	0001-0004.122	C-KERAMIK EDPT	6P8 0P25 63V	NP 0 1B 56	1	110/02/09		E-..	L
25C 5	0001-0014.086	C-TRIM KER SCHEIBE	3P5- 13P N 470 0,5	BL 301427411 21	1	111/01/06		E-..	L
25C 6	0000-7500.901	C-KERAMIK EDPT	ABGLEICHWERT	56	1	110/02/09	ABGLEICHWERT	E-..	I
25C 7	0001-0004.818	C-KERAMIK EDPT	10N 20/100 40V	R10000 2 56	1	110/02/10		E-..	L
25C 8	0001-0004.818	C-KERAMIK EDPT	10N 20/100 40V	R10000 2 56	1	110/02/10		E-..	L
25C 9	0001-0004.818	C-KERAMIK EDPT	10N 20/100 40V	R10000 2 56	1	110/02/10		E-..	L
25C 10	0001-0004.818	C-KERAMIK EDPT	10N 20/100 40V	R10000 2 56	1	110/02/10		E-..	L
25C 11	0001-0004.818	C-KERAMIK EDPT	10N 20/100 40V	R10000 2 56	1	110/02/10		E-..	L
25C 12	0001-0004.818	C-KERAMIK EDPT	10N 20/100 40V	R10000 2 56	1	110/02/10		E-..	L
25C 13	0001-0004.818	C-KERAMIK EDPT	10N 20/100 40V	R10000 2 56	1	110/02/10		E-..	L
25C 14	0001-0004.818	C-KERAMIK EDPT	10N 20/100 40V	R10000 2 56	1	110/02/10		E-..	L
25C 15	0001-0004.818	C-KERAMIK EDPT	10N 20/100 40V	R10000 2 56	1	110/02/10		E-..	L
25C 16	0001-0004.818	C-KERAMIK EDPT	10N 20/100 40V	R10000 2 56	1	110/02/10		E-..	L
25P 1	0000-7571.736	R-TRIM CERMET SQUARE	2k 10% 0W2 20	TK 100 T93YA 56	1	017/04/06		E-..	L
25P 3	0000-7571.736	R-TRIM CERMET SQUARE	2k 10% 0W2 20	TK 100 T93YA 56	1	017/04/06		E-..	L
25R 1	0000-7579.165	R-METALL	137R 0%1 0207	TK 15 56	1	018/04/01		E-..	L
25P 2	0000-7579.165	R-METALL	137R 0%1 0207	TK 15 56	1	018/04/01		E-..	L
25P 3	0000-7630.787	R-METALL	71R5 0%1 0207	TK 15 56	1	018/04/01		E-..	L
25P 5	0000-7630.787	R-METALL	71R5 0%1 0207	TK 15 56	1	018/04/01		E-..	L
25P 7	0000-7648.397	R-METALL	324R 0%1 0207	TK 15 56	1	018/04/01		E-..	L
25R 8	0000-7648.397	R-METALL	324R 0%1 0207	TK 15 56	1	018/04/01		E-..	L
25R 9	0000-7619.436	R-METALL	750R 1% 0204	TK 50 56	1	018/04/01		E-..	L

Bei Bestellung Sach-Nr. angeben!
When ordering, quote Item No.

S C H A L T T E I L L I S T E / P A R T - L I S T

SERIE N 0955-8400.027 OPTION 955/00.02 AUSF:

TEILE-NR PART NO	SACH-NR ITEM NO	BENENNUNG DESIGNATION	BEZEICHNUNG 1 MARKING 1	BEZEICHNUNG 2 MARKING 2	MG QU	WERKNORM REF.DESIG	BEMERKUNG NOTE	SERIE AF VERSION	C
25R 10	0000-7619.436	R-METALL	750R 1% 0204	TK 50 56	1	018/04/01		E-..	L
25R 11	0000-7608.612	R-METALL	294R 0%1 0207	TK 15 56	1	018/04/01		E-..	L
25R 12	0001-0002.580	R-METALL	31K6 1% 0207	TK 50 56	1	DRALORIC		E-..	L
25R 13	0001-0002.580	R-METALL	31K6 1% 0207	TK 50 56	1	DRALORIC		E-..	L
25R 14	0000-7608.612	R-METALL	294R 0%1 0207	TK 15 56	1	018/04/01		E-..	L
25REL 1	0000-7619.326	RELAIS GEPOLT BISTAB	001 AU 12V 1K5 HD	RSL12V	1	SDS		E-..	L
25REL 2	0000-7619.326	RELAIS GEPOLT BISTAB	001 AU 12V 1K5 HD	RSL12V	1	SDS		E-..	L
25REL 3	0000-7610.707	RELAIS GEPOLT BISTAB	002 AU 12V 1K4 SD	DS2E-L-12V	1	SDS		E-..	L
25REL 4	0000-7610.707	RELAIS GEPOLT BISTAB	002 AU 12V 1K4 SD	DS2E-L-12V	1	SDS		E-..	L
25REL 5	0000-7588.800	RELAIS GEPOLT BISTAB	040 AU 12V 1K5 HD	S4-L-12V	1	SDS		E-..	L
25UE 1	0954-7726.000	UEBERTRGER			1			E-..	A

Bei Bestellung Sach-Nr. angeben!
When ordering, quote Item No.

2.3	Interface <IEC 625>-Karte	BN 955/00.03
2.3	Interface <IEC 625> Card	BN 955/00.03
2.3	Carte Interface <IEC 625>	BN 955/00.03

SERIE G 0955-8400.030 OPTION 955/00.03 AUSF:

BN 955/00.03

TEILE-NR PART NO	SACH-NR ITEM NO	BENENNUNG DESIGNATION	BEZEICHNUNG 1 MARKING 1	BEZEICHNUNG 2 MARKING 2	MG QU	WERKNORM REF.DESIG	BEMERKUNG NOTE	SERIE AF VERSION	C
24C 1	0001-0004.821	C-KERAMIK EDPT	22N 20/ 80 40V	R10000 2 56	1	110/02/10			L
24C 2	0001-0004.821	C-KERAMIK EDPT	22N 20/ 80 40V	R10000 2 56	1	110/02/10			L
24C 3	0001-0004.821	C-KERAMIK EDPT	22N 20/ 80 40V	R10000 2 56	1	110/02/10			L
24C 4	0001-0004.795	C-KERAMIK EDPT	4N7 10% 63V	R 2000 2 56	1	110/02/10			L
24IC 1	0001-0015.988	IC-CMOS	4011BCP DIP 14	MOS	1	MOTOROLA			L
24IC 2	0001-0070.871	IC-CMOS	4073BCP DIP 14	MOS	1	MOTOROLA			L
24IC 3	0000-7519.840	IC-CMOS	4050BCP DIP 16	MOS	1	MOTOROLA			L
24IC 4	0000-7519.840	IC-CMOS	4050BCP DIP 16	MOS	1	MOTOROLA			L
24IC 5	0000-7583.889	IC-CMOS	40116E DIP 22	MOS	1	RCA			L
24IC 6	0000-7569.450	IC-CMOS	4504BCP DIP 16	MOS	1	MOTOROLA			L
24L 1	0001-0042.430	L-FUNKENTSTOER	6U 20% B82111-A-C4	75 OR19 1A5	1	SIEMENS			L
24R 1	0000-7541.494	R-MODUL	9X100K 5% 0W1	TK250 EXB-F10E-104J	1	018/06/01			L
24R 2	0000-7541.494	R-MODUL	9X100K 5% 0W1	TK250 EXB-F10E-104J	1	018/06/01			L
24R 3	0001-0007.035	R-KOHLE	10K 5% 0207	56	1	DRALORIC			L
24R 4	0000-7541.436	R-MODUL	9X 10K 5% 0W1	TK250 EXB-F10E-103J	1	018/06/01			L
24R 5	0001-0007.158	R-KOHLE	100K 5% 0207	56	1	018/03/01			L
24R 6	0001-0007.158	R-KOHLE	100K 5% 0207	56	1	018/03/01			L
24R 7	0001-0006.735	R-KOHLE	56R 5% 0207	56	1	DRALORIC			L
24ST 1	0000-7634.916	MESSERLEISTE C/2 WW	32 2 2,54X5,08 S3 AU	V42254-B1340-C483	1	SIEMENS			L

Bei Bestellung Sach-Nr. angeben!
When ordering, quote Item No.

S C H A L T T E I L L I S T E / P A R T - L I S T

SERIE 0853-8450.001 IEC-625-BUS 853/50 AUSF:

TEILE-NR PART NO	SACH-NR ITEM NO	BENENNUNG DESIGNATION	BEZEICHNUNG 1 MARKING 1	BEZEICHNUNG 2 MARKING 2	MG QU	WERKNORM REF.DESIG	BEMERKUNG NOTE	SERIE AF VERSION	C
90S 1	0000-7541.504	S-DUAL-IN-LINE	8 100 AU WIPP-	S76B08	1	013/06/05		..- G	L
90S 2	0000-7541.504	S-DUAL-IN-LINE	8 100 AU WIPP-	S76B08	1	013/06/05		..- G	L
91C 1	0001-0010.093	C-KF MKT	1U 10% 100V	MKT1813 56	1	110/03/06		..- G	L
91C 1	0001-0010.093	C-KF MKT	1U 10% 100V	MKT1813 56	1	110/03/06		H-..	L
91C 2	0001-0004.821	C-KERAMIK EDPT	22N 20/ 80 40V	R10000 2 56	1	110/02/10		..- G	L
91C 2	0001-0004.821	C-KERAMIK EDPT	22N 20/ 80 40V	R10000 2 56	1	110/02/10		H-..	L
91C 3	0001-0004.821	C-KERAMIK EDPT	22N 20/ 80 40V	R10000 2 56	1	110/02/10		..- G	L
91C 3	0001-0004.821	C-KERAMIK EDPT	22N 20/ 80 40V	R10000 2 56	1	110/02/10		H-..	L
91C 4	0001-0004.821	C-KERAMIK EDPT	22N 20/ 80 40V	R10000 2 56	1	110/02/10		..- G	L
91C 4	0001-0004.821	C-KERAMIK EDPT	22N 20/ 80 40V	R10000 2 56	1	110/02/10		H-..	L
91C 5	0001-0004.821	C-KERAMIK EDPT	22N 20/ 80 40V	R10000 2 56	1	110/02/10		..- G	L
91C 5	0001-0004.821	C-KERAMIK EDPT	22N 20/ 80 40V	R10000 2 56	1	110/02/10		H-..	L
91C 6	0001-0004.821	C-KERAMIK EDPT	22N 20/ 80 40V	R10000 2 56	1	110/02/10		..- G	L
91C 6	0001-0004.821	C-KERAMIK EDPT	22N 20/ 80 40V	R10000 2 56	1	110/02/10		H-..	L
91C 7	0001-0004.821	C-KERAMIK EDPT	22N 20/ 80 40V	R10000 2 56	1	110/02/10		..- G	L
91C 7	0001-0004.821	C-KERAMIK EDPT	22N 20/ 80 40V	R10000 2 56	1	110/02/10		H-..	L
91C 8	0001-0004.821	C-KERAMIK EDPT	22N 20/ 80 40V	R10000 2 56	1	110/02/10		..- G	L
91C 8	0001-0004.821	C-KERAMIK EDPT	22N 20/ 80 40V	R10000 2 56	1	110/02/10		H-..	L
91C 9	0001-0004.821	C-KERAMIK EDPT	22N 20/ 80 40V	R10000 2 56	1	110/02/10		..- G	L
91C 9	0001-0004.821	C-KERAMIK EDPT	22N 20/ 80 40V	R10000 2 56	1	110/02/10		H-..	L
91C 10	0001-0004.821	C-KERAMIK EDPT	22N 20/ 80 40V	R10000 2 56	1	110/02/10		..- G	L
91C 10	0001-0004.821	C-KERAMIK EDPT	22N 20/ 80 40V	R10000 2 56	1	110/02/10		H-..	L
91C 11	0001-0004.821	C-KERAMIK EDPT	22N 20/ 80 40V	R10000 2 56	1	110/02/10		..- G	L
91C 11	0001-0004.821	C-KERAMIK EDPT	22N 20/ 80 40V	R10000 2 56	1	110/02/10		H-..	L
91C 12	0001-0004.821	C-KERAMIK EDPT	22N 20/ 80 40V	R10000 2 56	1	110/02/10		..- G	L
91C 12	0001-0004.821	C-KERAMIK EDPT	22N 20/ 80 40V	R10000 2 56	1	110/02/10		H-..	L
91C 13	0001-0004.821	C-KERAMIK EDPT	22N 20/ 80 40V	R10000 2 56	1	110/02/10		..- G	L
91C 13	0001-0004.821	C-KERAMIK EDPT	22N 20/ 80 40V	R10000 2 56	1	110/02/10		H-..	L
91C 14	0001-0004.821	C-KERAMIK EDPT	22N 20/ 80 40V	R10000 2 56	1	110/02/10		..- G	L
91C 14	0001-0004.821	C-KERAMIK EDPT	22N 20/ 80 40V	R10000 2 56	1	110/02/10		H-..	L
91C 15	0001-0004.821	C-KERAMIK EDPT	22N 20/ 80 40V	R10000 2 56	1	110/02/10		..- G	L
91C 15	0001-0004.821	C-KERAMIK EDPT	22N 20/ 80 40V	R10000 2 56	1	110/02/10		H-..	L
91C 16	0001-0004.821	C-KERAMIK EDPT	22N 20/ 80 40V	R10000 2 56	1	110/02/10		..- G	L
91C 16	0001-0004.821	C-KERAMIK EDPT	22N 20/ 80 40V	R10000 2 56	1	110/02/10		H-..	L
91C 17	0001-0004.821	C-KERAMIK EDPT	22N 20/ 80 40V	R10000 2 56	1	110/02/10		..- G	L
91C 17	0001-0004.821	C-KERAMIK EDPT	22N 20/ 80 40V	R10000 2 56	1	110/02/10		H-..	L
91C 18	0001-0004.821	C-KERAMIK EDPT	22N 20/ 80 40V	R10000 2 56	1	110/02/10		..- G	L
91C 18	0001-0004.821	C-KERAMIK EDPT	22N 20/ 80 40V	R10000 2 56	1	110/02/10		H-..	L
91C 19	0001-0004.821	C-KERAMIK EDPT	22N 20/ 80 40V	R10000 2 56	1	110/02/10		..- G	L
91C 19	0001-0004.821	C-KERAMIK EDPT	22N 20/ 80 40V	R10000 2 56	1	110/02/10		H-..	L
91C 20	0001-0004.821	C-KERAMIK EDPT	22N 20/ 80 40V	R10000 2 56	1	110/02/10		..- G	L
91C 20	0001-0004.821	C-KERAMIK EDPT	22N 20/ 80 40V	R10000 2 56	1	110/02/10		H-..	L
91C 21	0001-0004.821	C-KERAMIK EDPT	22N 20/ 80 40V	R10000 2 56	1	110/02/10		..- G	L
91C 21	0001-0004.821	C-KERAMIK EDPT	22N 20/ 80 40V	R10000 2 56	1	110/02/10		H-..	L
91C 22	0001-0004.821	C-KERAMIK EDPT	22N 20/ 80 40V	R10000 2 56	1	110/02/10		..- G	L
91C 22	0001-0004.821	C-KERAMIK EDPT	22N 20/ 80 40V	R10000 2 56	1	110/02/10		H-..	L
91C 23	0001-0004.821	C-KERAMIK EDPT	22N 20/ 80 40V	R10000 2 56	1	110/02/10		..- G	L
91C 24	0001-0004.821	C-KERAMIK EDPT	22N 20/ 80 40V	R10000 2 56	1	110/02/10		..- G	L
91C 25	0001-0004.779	C-KERAMIK EDPT	3N3 10% 63V	R 2000 2 56	1	110/02/10		..- G	L

Bei Bestellung Sach-Nr. angeben!
When ordering, quote Item No.

SERIE 0853-8450.001 IEC-625-BUS 853/50 AUSF:

TEILE-NR PART NO	SACH-NR ITEM NO	BENENNUNG DESIGNATION	BEZEICHNUNG 1 MARKING 1	BEZEICHNUNG 2 MARKING 2	MG QU	WERKNORM REF.DESIG	BEMERKUNG NOTE	SERIE AF VERSION	C
91C 25	0001-0004.779	C-KERAMIK EDPT	3N3 10% 63V	R 2000 2 56	1	110/02/10		H-..	L
91C 26	0001-0004.779	C-KERAMIK EDPT	3N3 10% 63V	R 2000 2 56	1	110/02/10		..- G	L
91C 26	0001-0004.779	C-KERAMIK EDPT	3N3 10% 63V	R 2000 2 56	1	110/02/10		H-..	L
91C 27	0001-0004.821	C-KERAMIK EDPT	22N 20/-80 40V	R10000 2 56	1	110/02/10		U-..	L
91IC 1	0001-0067.156	IC-TTL	SN74LS 04N DIP 14		1	TEXAS		..- G	L
91IC 1	0001-0067.156	IC-TTL	SN74LS 04N DIP 14		1	TEXAS		H-..	L
91IC 2	0001-0067.169	IC-TTL	SN74LS 08N DIP 14		1	TEXAS		..- G	L
91IC 2	0001-0067.169	IC-TTL	SN74LS 08N DIP 14		1	TEXAS		H-..	L
91IC 3	0001-0070.512	IC-TTL	SN74LS138N DIP 16		1	TEXAS		..- G	L
91IC 3	0001-0070.512	IC-TTL	SN74LS138N DIP 16		1	TEXAS		H-..	L
91IC 4	0001-0071.281	IC-TTL	SN74LS 32N DIP 14		1	TEXAS		..- G	L
91IC 4	0001-0071.281	IC-TTL	SN74LS 32N DIP 14		1	TEXAS		H-..	L
91IC 5	0001-0070.512	IC-TTL	SN74LS138N DIP 16		1	TEXAS		..- G	L
91IC 5	0001-0070.512	IC-TTL	SN74LS138N DIP 16		1	TEXAS		H-..	L
91IC 6	0001-0072.170	IC-TTL	SN74LS243N DIP 14		1	TEXAS		..- G	L
91IC 6	0001-0072.170	IC-TTL	SN74LS243N DIP 14		1	TEXAS		H-..	L
91IC 7	0001-0072.170	IC-TTL	SN74LS243N DIP 14		1	TEXAS		..- G	L
91IC 7	0001-0072.170	IC-TTL	SN74LS243N DIP 14		1	TEXAS		H-..	L
91IC 8	0001-0065.695	IC-TTL	SN74LS 00N DIP 14		1	TEXAS		..- G	L
91IC 8	0001-0065.695	IC-TTL	SN74LS 00N DIP 14		1	TEXAS		H-..	L
91IC 9	0000-7541.494	R-MODUL	9X100K 5% 0W1	TK250 EXB-F10E-104J	1	018/06/01		..- G	L
91IC 9	0000-7541.494	R-MODUL	9X100K 5% 0W1	TK250 EXB-F10E-104J	1	018/06/01		H-..	L
91IC 10	0000-7541.494	R-MODUL	9X100K 5% 0W1	TK250 EXB-F10E-104J	1	018/06/01		..- G	L
91IC 10	0000-7541.494	R-MODUL	9X100K 5% 0W1	TK250 EXB-F10E-104J	1	018/06/01		H-..	L
91IC 11	0001-0070.541	IC-TTL	SN74LS258AN DIP 16		1	TEXAS		..- G	L
91IC 11	0001-0070.541	IC-TTL	SN74LS258AN DIP 16		1	TEXAS		H-..	L
91IC 12	0001-0070.541	IC-TTL	SN74LS258AN DIP 16		1	TEXAS		..- G	L
91IC 12	0001-0070.541	IC-TTL	SN74LS258AN DIP 16		1	TEXAS		H-..	L
91IC 13	0001-0067.169	IC-TTL	SN74LS 08N DIP 14		1	TEXAS		..- G	L
91IC 13	0001-0067.169	IC-TTL	SN74LS 08N DIP 14		1	TEXAS		H-..	L
91IC 14	0001-0066.254	IC-TTL	SN74LS 93N DIP 14		1	TEXAS		..- G	L
91IC 14	0001-0066.254	IC-TTL	SN74LS 93N DIP 14		1	TEXAS		H-..	L
91IC 15	0001-0066.856	IC-TTL	SN74LS 03N DIP 14		1	TEXAS		..- G	L
91IC 15	0001-0066.856	IC-TTL	SN74LS 03N DIP 14		1	TEXAS		H-..	L
91IC 16	0001-0065.585	IC-TTL	SN74LS 02N DIP 14		1	TEXAS		..- G	L
91IC 16	0001-0065.585	IC-TTL	SN74LS 02N DIP 14		1	TEXAS		H-..	L
91IC 17	0001-0066.241	IC-TTL	SN74LS 76AN DIP 16		1	TEXAS		..- G	L
91IC 17	0001-0066.241	IC-TTL	SN74LS 76AN DIP 16		1	TEXAS		H-..	L
91IC 18	0001-0067.198	IC-TTL	SN74LS123N DIP 16		1	TEXAS		..- G	L
91IC 18	0001-0067.198	IC-TTL	SN74LS123N DIP 16		1	TEXAS		H-..	L
91IC 19	0001-0056.837	IC-TTL	SN74LS 74AN DIP 14		1	TEXAS		..- G	L
91IC 19	0001-0056.837	IC-TTL	SN74LS 74AN DIP 14		1	TEXAS		H-..	L
91IC 20	0001-0071.281	IC-TTL	SN74LS 32N DIP 14		1	TEXAS		..- G	L
91IC 20	0001-0071.281	IC-TTL	SN74LS 32N DIP 14		1	TEXAS		H-..	L
91IC 21	0000-7541.436	R-MODUL	9X 10K 5% 0W1	TK250 EXB-F10E-103J	1	018/06/01		..- G	L
91IC 21	0000-7541.436	R-MODUL	9X 10K 5% 0W1	TK250 EXB-F10E-103J	1	018/06/01		H-..	L
91IC 22	0000-7547.825	IC-MOS	MC 68488 P DIC 40	MOS	1	MOTOROLA		..- G	L
91IC 22	0000-7547.825	IC-MOS	MC 68488 P DIC 40	MOS	1	MOTOROLA		H-..	L
91IC 23	0000-7547.838	IC-TTL	MC 3448 AP DIP 16		1	MOTOROLA		..- G	L
91IC 23	0000-7585.395	IC-TTL	MC 3447 P DIC 24		1	MOTOROLA		H-..	L

Bei Bestellung Sach-Nr. angeben!
When ordering, quote Item No.

SERIE 0853-8450.001 IEC-625-BUS 853/50 AUSF:

TEILE-NR PART NO	SACH-NR ITEM NO	BENENNUNG DESIGNATION	BEZEICHNUNG 1 MARKING 1	BEZEICHNUNG 2 MARKING 2	MG QU	WERKNORM REF.DESIG	BEMERKUNG NOTE	SERIE AF VERSION	C
91IC 24	0000-7547.838	IC-TTL	MC 3448 AP DIP 16		1	MOTOROLA		..- G	L
91IC 24	0000-7585.305	IC-TTL	MC 3447 P DIC 24		1	MOTOROLA		H-..	L
91IC 25	0000-7547.838	IC-TTL	MC 3448 AP DIP 16		1	MOTOROLA		..- G	L
91IC 26	0000-7547.838	IC-TTL	MC 3448 AP DIP 16		1	MOTOROLA		..- G	L
91R 1	0001-0006.926	R-KOHLE	1K2 5% 0207	56	1	DRALORIC		..- G	L
91R 1	0001-0006.926	R-KOHLE	1K2 5% 0207	56	1	DRALORIC		H-..	L
91R 2	0001-0007.145	R-KOHLE	82K 5% 0207	56	1	018/03/01		..- G	L
91R 2	0001-0007.145	R-KOHLE	82K 5% 0207	56	1	018/03/01		H-..	L
91R 3	0001-0007.116	R-KOHLE	47K 5% 0207	56	1	018/03/01		..- G	L
91R 3	0001-0007.116	R-KOHLE	47K 5% 0207	56	1	018/03/01		H-..	L
91R 4	0001-0006.926	R-KOHLE	1K2 5% 0207	56	1	DRALORIC		..- G	L
91R 4	0001-0006.926	R-KOHLE	1K2 5% 0207	56	1	DRALORIC		H-..	L
91R 5	0001-0006.926	R-KOHLE	1K2 5% 0207	56	1	DRALORIC		..- G	L
91R 5	0001-0006.926	R-KOHLE	1K2 5% 0207	56	1	DRALORIC		H-..	L
91R 6	0001-0006.955	R-KOHLE	2K2 5% 0207	56	1	DRALORIC		..- G	L
91R 6	0001-0006.955	R-KOHLE	2K2 5% 0207	56	1	DRALORIC		H-..	L
91R 7	0001-0006.926	R-KOHLE	1K2 5% 0207	56	1	DRALORIC		..- G	L
91R 7	0001-0006.926	R-KOHLE	1K2 5% 0207	56	1	DRALORIC		H-..	L
91R 8	0001-0006.971	R-KOHLE	3K3 5% 0207	56	1	DRALORIC		H-..	L
91R 9	0001-0006.955	R-KOHLE	2K2 5% 0207	56	1	DRALORIC		U-..	L
91S 1	0000-7541.504	S-DUAL-IN-LINE	8 100 AU WIPP-	S76B08	1	013/06/05		H-..	L
91S 2	0000-7541.504	S-DUAL-IN-LINE	8 100 AU WIPP-	S76B08	1	013/06/05		H-..	L
91ST 1	0000-7547.867	D-STECKVERB.(V)	25 2 2,77X2,84 S1 AU	DB25P-0L1	1	CANNON		..- G	L
91ST 1	0000-7547.867	D-STECKVERB.(V)	25 2 2,77X2,84 S1 AU	DB25P-0L1	1	CANNON		H-..	L

Bei Bestellung Sach-Nr. angeben!
When ordering, quote Item No.

2.4	Zusatzfilter 100 Hz	BN 955/00.06
2.4	100 Hz auxiliary filter	BN 955/00.06
2.4	Filtre auxiliaire 100 Hz	BN 955/00.06

SERIE 6 0955-6400.069 ZUSATZFILTER 100HZ AUSF:

BN 955/00.06

TEILE-NR PART NO	SACH-NR ITEM NO	BENENNUNG DESIGNATION	BEZEICHNUNG 1 MARKING 1	BEZEICHNUNG 2 MARKING 2	MG QU	WERKNORM REF.DESIG	BEMERKUNG NOTE	SERIE AF VERSION	C
17C 1	0000-7552.784	C-KF KS	5N11 1% 160V	B31521 56	1	110/03/12			L
17C 2	0000-7552.292	C-KF KS	562P 1% 160V	B31521 56	1	110/03/12			L
17C 3	0000-7552.263	C-KF KS	499P 1% 160V	B31521 56	1	110/03/12			L
17C 5	0000-7552.234	C-KF KS	453P 1% 160V	B31521 56	1	110/03/12			L
17C 11	0001-0004.821	C-KERAMIK EDPT	22N 20/ 80 40V	R10000 2 56	1	110/02/10			L
17C 12	0001-0040.966	ELKO-TA SINT FEST	22U 20% 16V	ETR-3 56	1	110/05/61			L
17C 15	0001-0014.374	C-TRIM LUFT DIFF	1P8- 8P8 50PPM	10 1326 25008 000	1	111/02/02			L
17C 16	0001-0004.559	C-KERAMIK EDPT	120P 2% 63V	NP 0 1B 56	1	110/02/09			L
17C 17	0001-0004.397	C-KERAMIK EDPT	47P 2% 63V	N 150 1B 56	1	110/02/09			L
17C 21	0000-7588.143	C-KERAMIK KDPU	1U 20% 50V	Z5U VP44BY105MA	1	VITRAMON			L
17C 22	0000-7551.235	C-KERAMIK KDPU	100N 20% 50V	X7R VP32BY104MA	1	110/02/15			L
17C 23	0000-7588.143	C-KERAMIK KDPU	1U 20% 50V	Z5U VP44BY105MA	1	VITRAMON			L
17C 24	0000-7551.235	C-KERAMIK KDPU	100N 20% 50V	X7R VP32BY104MA	1	110/02/15			L
17C 25	0000-7588.143	C-KERAMIK KDPU	1U 20% 50V	Z5U VP44BY105MA	1	VITRAMON			L
17C 26	0000-7588.143	C-KERAMIK KDPU	1U 20% 50V	Z5U VP44BY105MA	1	VITRAMON			L
17C 27	0001-0004.821	C-KERAMIK EDPT	22N 20/ 80 40V	R10000 2 56	1	110/02/10			L
17L 1	0874-7827.001	SPULE			1				A
17L 2	0829-7761.002	SPULE			1				A
17P 1	0001-0008.306	R-TRIM CERMET LIEG	4K7 20% 0W5 1	TK 100 (ALT 17/02/08)	1	017/02/15			L
17Q 1	0874-9711.005	FILTERQUARZ	10,032KHZ 21454/U		1				L
17Q 2	0874-9710.006	FILTERQUARZ	9,967KHZ 21454/U		1				L
17R 2	0000-7644.812	R-METALL	12K4 1% 0204	TK 50 56	1	018/04/01			L
17R 3	0000-7533.745	R-METALL	3K65 1% 0204	TK 50 56	1	018/04/01			L
17R 4	0000-7645.882	R-METALL	1M 1% 0204	TK 50 56	1	018/04/01			L
17R 5	0000-7519.471	R-METALL	100R 1% 0204	TK 50 56	1	018/04/01			L
17R 6	0000-7645.882	R-METALL	1M 1% 0204	TK 50 56	1	018/04/01			L
17R 7	0000-7585.560	R-METALL	10K 1% 0204	TK 50 56	1	018/04/01			L
17R 8	0000-7585.434	R-METALL	56R2 1% 0204	TK 50 56	1	018/04/01			L
17R 9	0000-7608.845	R-METALL	22R1 1% 0204	TK 50 56	1	018/04/01			L
17R 21	0000-7608.845	R-METALL	22R1 1% 0204	TK 50 56	1	018/04/01			L
17R 22	0000-7519.536	R-METALL	100K 1% 0204	TK 50 56	1	018/04/01			L
17R 23	0000-7519.536	R-METALL	100K 1% 0204	TK 50 56	1	018/04/01			L
17R 24	0000-7585.544	R-METALL	1K 1% 0204	TK 50 56	1	018/04/01			L
17R 25	0000-7519.536	R-METALL	100K 1% 0204	TK 50 56	1	018/04/01			L
17R 26	0000-7519.536	R-METALL	100K 1% 0204	TK 50 56	1	018/04/01			L
17R 27	0000-7633.991	R-METALL	200K 1% 0204	TK 50 56	1	018/04/01			L
17R 28	0000-7519.536	R-METALL	100K 1% 0204	TK 50 56	1	018/04/01			L
17R 29	0000-7519.471	R-METALL	100R 1% 0204	TK 50 56	1	018/04/01			L
17S 1	0000-7598.104	S-SCHIEBE	3 AU 2-POL 24X11X14	ETSM 2-3 AU KNOPF GRAU	1	NSF/EBE			L
17S 2	0000-1832.015	S-DUAL-IN-LINE	1 100 SN HAKEN-	GEK.: C42315-A1347-A124	1	SIEMENS			L
17ST 1	0000-7610.574	MESSERLEISTE C/2	48 3 2,54X2,54 S1 AU	C133-714A-48P(30)	1	AMPHENOL			L
17ST 2	0000-2717.003	HF-KABELWINKLSTECKER	BNC 75 75 V D	LT KA	1				L
17ST 3	0000-2717.003	HF-KABELWINKLSTECKER	BNC 75 75 V D	LT KA	1				L
17T 1	0000-7656.376	TRANS SI NPN	BC 549 C A TO 92		1	VALVO			L

Bei Bestellung Sach-Nr. angeben!
When ordering, quote Item No.

S C H A L T T E I L L I S T E / P A R T - L I S T

SERIE B 0955-8400.069 ZUSATZFILTER 100HZ AUSF:

TEILE-NR PART NO	SACH-NR ITEM NO	BENENNUNG DESIGNATION	BEZEICHNUNG 1 MARKING 1	BEZEICHNUNG 2 MARKING 2	MG QU	WERKNORM REF.DESIG	BEMERKUNG NOTE	SERIE AF VERSION	C
17T 21	0000-7619.287	TRANS SI N VMOS	BS 170 6 TO 92	MOS	1	ITT			L
17T 22	0000-7598.971	TRANS SI P DMOS	BS 250 G TO 92		1	ITT			L
17T 23	0000-7598.971	TRANS SI P DMOS	BS 250 G TO 92		1	ITT			L
17T 24	0000-7619.287	TRANS SI N VMOS	BS 170 6 TO 92	MOS	1	ITT			L
17T 25	0000-7619.287	TRANS SI N VMOS	BS 170 6 TO 92	MOS	1	ITT			L

Bei Bestellung Sach-Nr. angeben!
When ordering, quote Item No.

2.5
2.6

2.5	Ausgangsfeld zum PSE-15 für Grundgerät BN 955/01	BN 955/00.21
2.5	Output section for PSE-15 main frame BN 955/01	BN 955/00.21
2.5	Section sortie pour PSE-15 pour appareil de base BN 955/01	BN 955/00.21
2.6	Ausgangsfeld zum PSE-15 für Grundgerät BN 955/02	BN 955/00.22
2.6	Output section for PSE-15 main frame BN 955/02	BN 955/00.22
2.6	Section sortie pour PSE-15 pour appareil de base BN 955/02	BN 955/00.22

SCHALTTEILLISTE / PART-LIST

SERIE B 0955-8400.218 OPTION 0955/00.21 AUSF:

BN 955/00.21

TEILE-NR PART NO	SACH-NR ITEM NO	BENENNUNG DESIGNATION	BEZEICHNUNG 1 MARKING 1			BEZEICHNUNG 2 MARKING 2		MG QU	WERKNORM REF.DESIG	BEMERKUNG NOTE	SERIE AF VERSION	C
2P 3	0000-7580.510	R-METALL	137R	0%1	0411	TK 15	56	1	018/04/01			L
2R 4	0001-0002.247	R-METALL	13K3	1%	0207	TK 50	56	1	DRALORIC			L
3R 63	0001-0000.100	R-METALL	15R4	1%	0207	TK 50	56	1	DRALORIC			L
25R 3	0000-7648.533	R-METALL	64R2	0%1	0207	TK 15	56	1	018/04/01			L
25R 5	0000-7648.533	R-METALL	64R2	0%1	0207	TK 15	56	1	018/04/01			L
25R 7	0000-7511.660	R-METALL	681R	0%1	0207	TK 15	56	1	018/04/01			L
25R 8	0000-7511.660	R-METALL	681R	0%1	0207	TK 15	56	1	018/04/01			L

Bei Bestellung Sach-Nr. angeben!
When ordering, quote Item No.

SERIE C 0955-8400.221 OPTION 955/00.22 AUSF:

BN 955/00.22

TEILE-NR PART NO	SACH-NR ITEM NO	BENENNUNG DESIGNATION	BEZEICHNUNG 1 MARKING 1	BEZEICHNUNG 2 MARKING 2	MG QU	WERKNORM REF.DESIG	BEMERKUNG NOTE	SERIE AF VERSION	C
2FU 1	0001-0032.990	HF-BUCHSE	WECO 470C 75 M B	LT FL 57,0	1				L
2BU 2	0001-0032.990	HF-BUCHSE	WECO 470C 75 M B	LT FL 57,0	1				L
2BU 3	0000-7555.189	KLINKENBUCHSE+FEDERS	2 M EL LT	M-112A (HI-D JAX)	1	SWITCHCRAF			L
2BU 4	0000-7555.192	KLINKENBUCHSE+FEDERS	3 M EL LT	M-112B (HI-D JAX)	1	SWITCHCRAF			L
2C 1	0001-0069.468	C-TRIM KER SCHEIBE	7P - 35P N1500 0,5	OR 301427603 21	1	111/01/06			L
2C 3	0001-0014.086	C-TRIM KER SCHEIBE	3P5- 13P N 470 0,5	BL 301427411 21	1	111/01/06			L
2C 9	0000-7519.866	C-KF MKT	1U 10% 100V	MKT1822 NUR ERO 56	1	ROEDERST.		C-..	L
2C 10	0000-7520.460	ELKO-AL UNGEPOLT	47U 10/ 50 63V	ERU 56	1	ROEDERST.		C-..	L
2C 11	0001-0004.669	C-KERAMIK EDPT	470P 10% 63V	R 2000 2 56	1	110/02/10			L
2C 12	0000-7535.303	C-TRIM KER SCHEIBE	3P5- 20P NP 0 0,5	20 DP 301504114 21	1	111/01/05			L
2C 13	0001-0004.339	C-KERAMIK EDPT	33P 2% 63V	NP 0 1B 56	1	110/02/09			L
2C 14	0001-0069.468	C-TRIM KER SCHEIBE	7P - 35P N1500 0,5	OR 301427603 21	1	111/01/06			L
2C 15	0001-0004.148	C-KERAMIK EDPT	8P2 0P25 63V	NP 0 1B 56	1	110/02/09			L
2L 1	0000-7556.337	L-FEST	220U 10% 1025-76	30 0,8 9 21R 50MA	1	117/01/03			L
2L 2	0000-7555.985	L-FEST	270N 10% 1025-06	35 25 430 0R16 960MA	1	117/01/03			L
2L 3	0000-7555.998	L-FEST	330N 10% 1025-08	30 25 410 0R22 815MA	1	117/01/03			L
2R 1	0000-7577.963	R-METALL	612R 0%1 0411S	TK 15 56	1	DRALORIC			L
2R 2	0001-0002.713	R-METALL	45K3 1% 0207	TK 50 56	1	DRALORIC			L
2R 3	0000-7580.510	R-METALL	137R 0%1 0411	TK 15 56	1	018/04/01			L
2R 4	0001-0002.140	R-METALL	10K2 1% 0207	TK 50 56	1	DRALORIC			L
2R 5	0000-7563.854	R-METALL	126R 0%1 0411	TK 15 56	1	018/04/01			L
2R 6	0001-0002.179	R-METALL	11K 1% 0207	TK 50 56	1	DRALORIC			L
2R 7	0000-7608.528	R-METALL	523R 0%1 0207	TK 15 56	1	018/04/01			L
2R 8	0001-0000.935	R-METALL	432R 1% 0207	TK 50 56	1	DRALORIC			L
2R 9	0001-0000.579	R-METALL	127R 1% 0207	TK 50 56	1	DRALORIC			L
2R 10	0001-0002.195	R-METALL	11K5 1% 0207	TK 50 56	1	DRALORIC			L
2R 11	0000-7617.360	R-METALL	150R 0%1 0411S	TK 15 56	1	018/04/01			L
2R 12	0000-7563.841	R-METALL	152R 0%1 0411	TK 15 56	1	018/04/01			L
2REL 1	0000-7619.326	RELAIS GEPOLT BISTAB	001 AU 12V 1K5 HD	RSL12V	1	SDS			L
2REL 2	0000-7610.707	RELAIS GEPOLT BISTAB	002 AU 12V 1K4 SD	DS2E-L-12V	1	SDS			L
2REL 5	0000-7610.707	RELAIS GEPOLT BISTAB	002 AU 12V 1K4 SD	DS2E-L-12V	1	SDS			L
2REL 6	0000-7610.707	RELAIS GEPOLT BISTAB	002 AU 12V 1K4 SD	DS2E-L-12V	1	SDS			L
2UE 1	0829-7727.004	UEBERTRAGER			1			C-..	A
2UE 2	0829-7731.003	UEBERTRAGER			1			C-..	A
3R 63	0001-0000.100	R-METALL	15R4 1% 0207	TK 50 56	1	DRALORIC			L
9R 7	0001-0001.329	R-METALL	1K37 1% 0207	TK 50 56	1	DRALORIC			L
9R 8	0001-0001.950	R-METALL	6K49 1% 0207	TK 50 56	1	DRALORIC			L
15BU 401	0000-7555.192	KLINKENBUCHSE+FEDERS	3 M EL LT	M-112B (HI-D JAX)	1	SWITCHCRAF			L

Bei Bestellung Sach-Nr. angeben!
When ordering, quote Item No.

SERIE C 0955-8400.221 OPTION 955/00.22 AUSF:

TEILE-NR PART NO	SACH-NR ITEM NO	BENENNUNG DESIGNATION	BEZEICHNUNG 1 MARKING 1	BEZEICHNUNG 2 MARKING 2	MG QU	WERKNORM REF.DESIG	BEMERKUNG NOTE	SERIE AF VERSION	C
25BU 1	0001-0032.990	HF-BUCHSE	WECO 470C 75 M B	LT FL 57,0	1				L
25BU 2	0001-0032.990	HF-BUCHSE	WECO 470C 75 M B	LT FL 57,0	1				L
25BU 3	0000-7555.189	KLINKENBUCHSE+FEDERS	2 M EL LT	M-112A (HI-D JAX)	1	SWITCHCRAF			L
25BU 4	0000-7555.192	KLINKENBUCHSE+FEDERS	3 M EL LT	M-112B (HI-D JAX)	1	SWITCHCRAF			L
25C 1	0001-0069.468	C-TRIM KER SCHEIBE	7P - 35P N1500 0,5	OR 301427603 21	1	111/01/06			L
25C 3	0001-0069.400	C-TRIM KER SCHEIBE	2P5- 7P5 NP 0 0,5	BR 301427125 21	1	111/01/06			L
25C 5	0001-0014.086	C-TRIM KER SCHEIBE	3P5- 13P N 470 0,5	BL 301427411 21	1	111/01/06			L
25C 6	0000-7500.901	C-KERAMIK EDPT	ABGLEICHWERT	56	1	110/02/09	ABGLEICHWERT		I
25C 7	0001-0004.818	C-KERAMIK EDPT	10N 20/100 40V	R10000 2 56	1	110/02/10			L
25C 8	0001-0004.818	C-KERAMIK EDPT	10N 20/100 40V	R10000 2 56	1	110/02/10			L
25C 9	0001-0004.818	C-KERAMIK EDPT	10N 20/100 40V	R10000 2 56	1	110/02/10			L
25C 10	0001-0004.818	C-KERAMIK EDPT	10N 20/100 40V	R10000 2 56	1	110/02/10			L
25C 11	0001-0004.818	C-KERAMIK EDPT	10N 20/100 40V	R10000 2 56	1	110/02/10			L
25C 12	0001-0004.818	C-KERAMIK EDPT	10N 20/100 40V	R10000 2 56	1	110/02/10			L
25C 13	0001-0004.818	C-KERAMIK EDPT	10N 20/100 40V	R10000 2 56	1	110/02/10			L
25C 14	0001-0004.818	C-KERAMIK EDPT	10N 20/100 40V	R10000 2 56	1	110/02/10			L
25C 15	0001-0004.818	C-KERAMIK EDPT	10N 20/100 40V	R10000 2 56	1	110/02/10			L
25C 16	0001-0004.818	C-KERAMIK EDPT	10N 20/100 40V	R10000 2 56	1	110/02/10			L
25C 17	0001-0004.753	C-KERAMIK EDPT	2N7 10% 63V	R 2000 2 56	1	110/02/10			L
25C 18	0001-0004.737	C-KERAMIK EDPT	2N2 10% 63V	R 2000 2 56	1	110/02/10			L
25C 19	0001-0004.122	C-KERAMIK EDPT	6P8 0P25 63V	NP 0 1B 56	1	110/02/09			L
25C 20	0000-7500.901	C-KERAMIK EDPT	ABGLEICHWERT	56	1	110/02/09	ABGLEICHWERT		I
25P 1	0000-7571.736	R-TRIM CERMET SQUARE	2K 10% 0W2 20	TK 100 T93YA 56	1	017/04/06			L
25P 3	0000-7571.736	R-TRIM CERMET SQUARE	2K 10% 0W2 20	TK 100 T93YA 56	1	017/04/06			L
25R 1	0000-7579.165	R-METALL	137R 0%1 0207	TK 15 56	1	018/04/01			L
25R 2	0000-7579.165	R-METALL	137R 0%1 0207	TK 15 56	1	018/04/01			L
25R 3	0000-7640.858	R-METALL	59R 0%1 0207	TK 15 56	1	018/04/01			L
25R 4	0001-0002.137	R-METALL	10K 1% 0207	TK 50 56	1	DRALORIC			L
25R 5	0000-7640.858	R-METALL	59R 0%1 0207	TK 15 56	1	018/04/01			L
25R 6	0001-0002.137	R-METALL	10K 1% 0207	TK 50 56	1	DRALORIC			L
25R 7	0000-7619.436	R-METALL	750R 1% 0204	TK 50 56	1	018/04/01			L
25R 8	0000-7608.612	R-METALL	294R 0%1 0207	TK 15 56	1	018/04/01			L
25R 9	0001-0002.580	R-METALL	31K6 1% 0207	TK 50 56	1	DRALORIC			L
25R 10	0001-0002.580	R-METALL	31K6 1% 0207	TK 50 56	1	DRALORIC			L
25R 11	0000-7608.612	R-METALL	294R 0%1 0207	TK 15 56	1	018/04/01			L
25R 13	0000-7640.845	R-METALL	74R1 0%1 0207	TK 15 56	1	018/04/01			L
25R 15	0000-7640.845	R-METALL	74R1 0%1 0207	TK 15 56	1	018/04/01			L
25R 17	0000-7608.942	R-METALL	825R 1% 0204	TK 50 56	1	018/04/01			L
25REL 1	0000-7619.326	RELAIS GEPOLT BISTAB	001 AU 12V 1K5 HD	RSL12V	1	SDS			L
25REL 2	0000-7619.326	RELAIS GEPOLT BISTAB	001 AU 12V 1K5 HD	RSL12V	1	SDS			L
25REL 3	0000-7610.707	RELAIS GEPOLT BISTAB	002 AU 12V 1K4 SD	DS2E-L-12V	1	SDS			L
25REL 4	0000-7610.707	RELAIS GEPOLT BISTAB	002 AU 12V 1K4 SD	DS2E-L-12V	1	SDS			L
25REL 5	0000-7588.800	RELAIS GEPOLT BISTAB	040 AU 12V 1K5 HD	S4-L-12V	1	SDS			L
25UE 1	0954-7726.000	UEBERTRGER			1				A

Bei Bestellung Sach-Nr. angeben!
When ordering, quote Item No.

2.7	Geräuschberechnung in dBrnC	BN 955/00.23
2.7	Noise measurements in dBrnC	BN 955/00.23
2.7	Mesure de bruit en dBrnC	BN 955/00.23

W+G -EDV- *

S C H A L T T E I L L I S T E / P A R T - L I S T

BLATT 1 07.05.87

SERIE 0955-8400.234 OPTION 0955/00.23 AUSF:

BN 955/00.23

TEILE-NR PART NO	SACH-NR ITEM NO	BENENNUNG DESIGNATION	BEZEICHNUNG 1 MARKING 1	BEZEICHNUNG 2 MARKING 2	MG QU	WERKNORM REF.DESIG	BEMERKUNG NOTE	SERIE AF VERSION	C
9R 7	0001-0001.329	R-METALL	1K37 1% 0207	TK 50 56	1	DRALORIC			L
9R 8	0001-0001.950	R-METALL	6K49 1% 0207	TK 50 56	1	DRALORIC			L

Bei Bestellung Sach-Nr. angeben!
When ordering, quote Item No.

3/4 19" Halbschalengehäuse BN 960
3/4 19" Half-shell type case BN 960
Coffret cadre 3/4 19" BN 960

3/4 19" Halbschalengehäuse/ 3/4 19" half-shell type case/Coffret cadre 3/4 19"

BN 960

Pos.	Bezeichnung	Description	Désignation	Bestell-Nummer Order Number N° de commande
1	Schale oben	Upper shell	Coquille supérieure	0960-0120.019
2	Zylinderschraube M4×50 DIN 912	Cylinder head machine screw, 4×50 mm, DIN 912	Vis cylindrique M4×50 DIN 912	0000-7578.069
3	Gehäusefuß	Foot for case	Pied de coffret	0960-0000.074
4	Führung	Guide	Téton	0700-0100.013
5	Zylinderschraube M4×8 DIN 7984	Cylinder head machine screw, 4×8 mm, DIN 7984	Vis cylindrique M4×8 DIN 7984	0000-7583.931
6	Sechskantmutter M4 DIN 439	Hexagonal nut, 4 mm, DIN 439	Ecrou à 6 pans M4 DIN 439	0001-0024.021
7	Schale unten	Lower shell	Coquille inférieure	0960-0110.016
8	Rastfuß I	Indented foot I	Pied verrouillage I	0700-0000.029
9	Rastfuß II	Indented foot II	Pied verrouillage II	0700-0000.032
10	Fuß	Foot	Pied	0000-0421.075
11	Zylinderschraube M4×12 DIN 84	Cylinder head machine screw, 4×12 mm, DIN 84	Vis cylindrique M4×12 DIN 84	0001-0022.036
12	Seitenteil links und rechts	Side section, left and right	Parois latérales droite et gauche	0960-0000.139
13	Traggriff komplett	Carrier handle, complete	Poignée de transport complête	0960-0002.001
14	Druckknopf	Push button	Bouton poussoir	0960-0002.069
15	Feder	Spring	Ressort	0960-0002.072
16	Wellscheibe	Spring friction washer	Rondelle élastique	0960-0002.098
17	Sicherungsscheibe 10,0×20; 4×1,2 DIN 6799	Circlip, 10.0×20; 4×1.2 DIN DIN 6799	Circlip 10,0×20; 4×1,2 DIN 6799	0000-7588.855
18	Druckplatte	Pressure plate	Plaque d'appui	0960-0002.043

5/1067

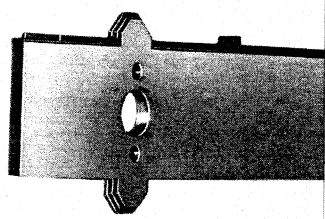

Seitenteil links
Side section, left
Parois latérales droite

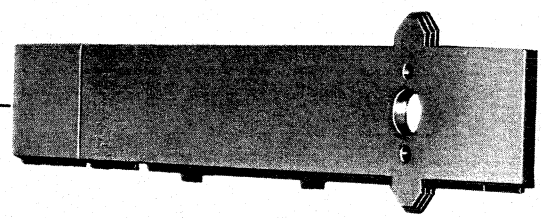

Seitenteil rechts
Side section, right
Parois latérales gauche

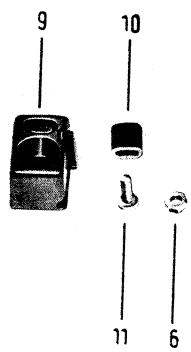

Rastfuß I und II
Lock-foot I and II
Pied verrouillage I et II

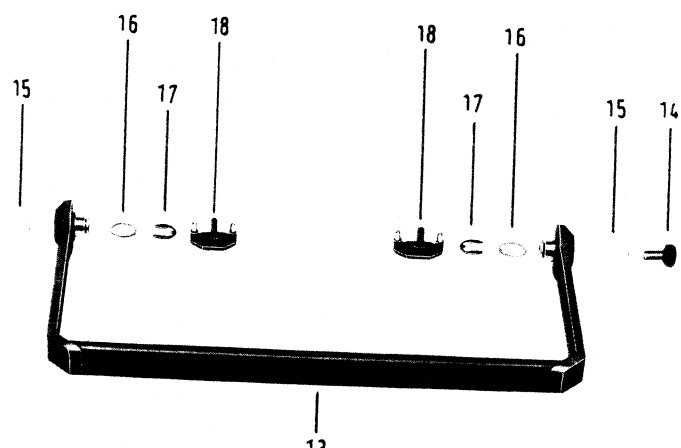

griff komplett
ier handle, complete
née de transport complête

Mechanische Teile für Frontplatte
Mechanical parts for front panel
Composants mécaniques pour la face avant

Bitte bei Bestellung immer die Gerätenummer und Serie a
Please state instrument number and series when orderin
Lors de commandes donner toujours le numéro de l'appa

Pos. Benennung Pos. Designation Pos. Désignation	Bestellangaben Order Number Numéros de commande
1 Kappe, cap, capuchon	0000-2001.308
2 Kappe, cap, capuchon	0000-2000.503
3 Kappe, cap, capuchon	0000-2000.529
4 Kappe, cap, capuchon	0000-2007.483
5 Kappe, cap, capuchon	0000-2000.765
6 Kappe, cap, capuchon	0000-2007.441
7 Kappe, cap, capuchon	0000-2001.269
8 Kappe, cap, capuchon	0000-2007.344
9 Kappe, cap, capuchon	0000-2007.360
10 Kappe, cap, capuchon	0000-2007.386
11 Kappe, cap, capuchon	0000-2007.409
12 Kappe, cap, capuchon	0000-2007.506
13 Kappe, cap, capuchon	0000-2007.425
14 Kappe, cap, capuchon	0000-2007.467
15 Kappe, cap, capuchon	0000-2021.540
16 Kappe, cap, capuchon	0000-2003.021

Int. Vermerk:
Pos. 1-23 in Liste Eingabeschaltung
Pos. 24-27 in Liste S-Verdrahtung
Pos. 28-30 in Liste Gerät komplett

Int. Note:
Pos. 1-22 in list entry c
Pos. 24-27 in list switc
Pos. 28-30 in list comp

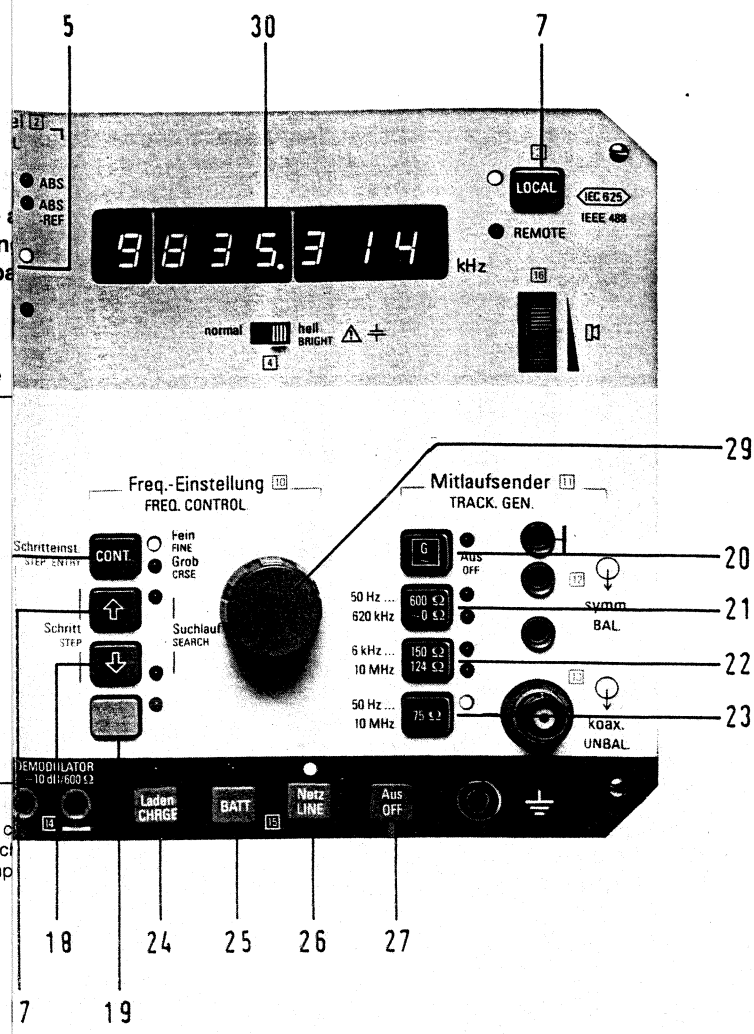

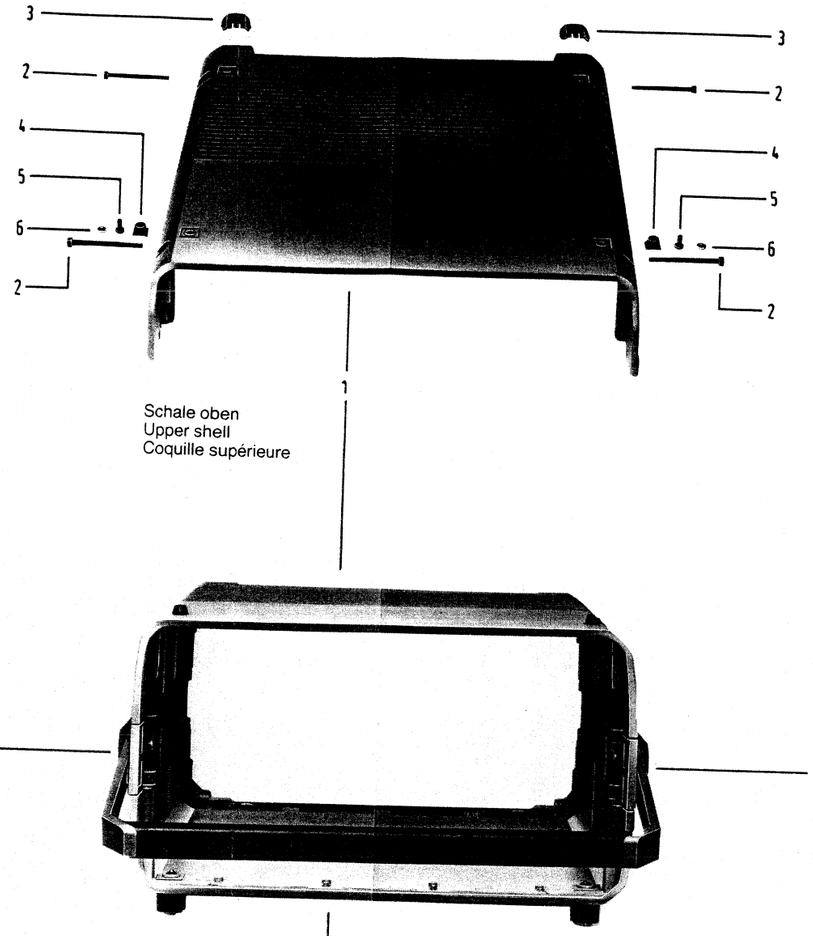

Schale oben
Upper shell
Coquille supérieure

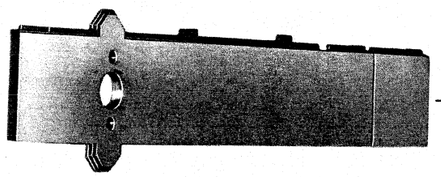

Seitenteil links
Side section, left
Parois latérales droite

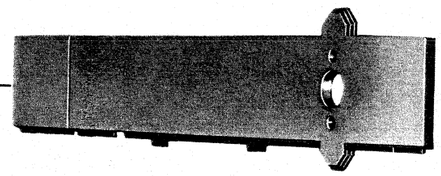

Seitenteil rechts
Side section, right
Parois latérales gauche

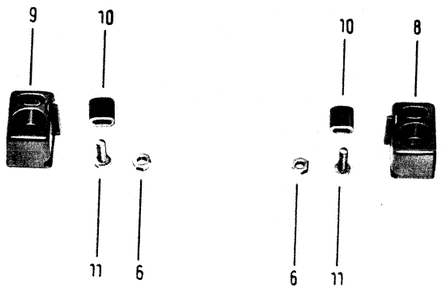

Rastfuß I und II
Lock-foot I and II
Pied verrouillage I et II

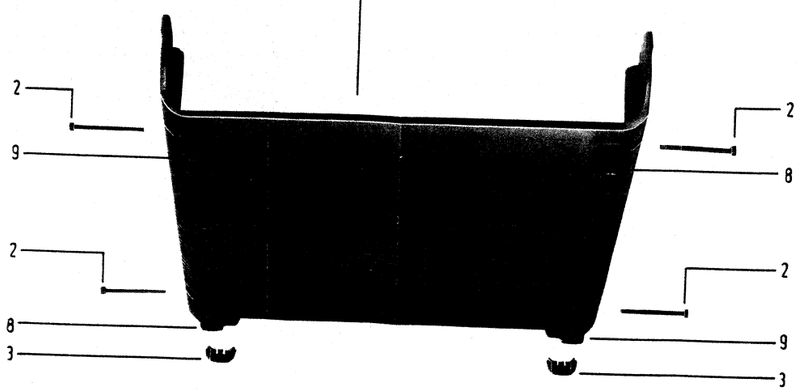

Schale unten
Lower shell
Coquille supérieure

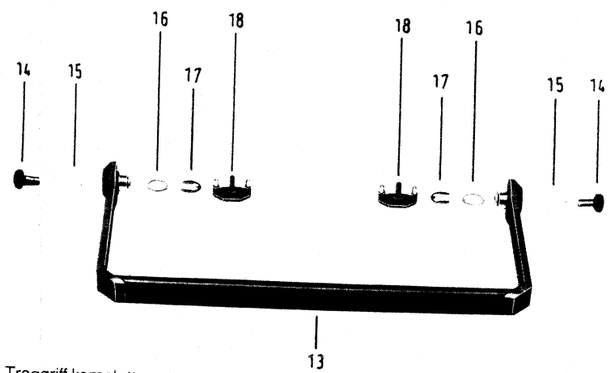

Traggriff komplett
Carrier handle, complete
Poignée de transport complête

Mechanische Teile für Frontplatte
Mechanical parts for front panel
Composants mécaniques pour la face avant

SPM-15

Bitte bei Bestellung immer die Gerätenummer und Serie angeben
Please state instrument number and series when ordering parts
Lors de commandes donner toujours le numéro de l'appareil et la série

Pos. Pos. Pos.	Benennung Designation Désignation	Bestellangaben Order Number Numéros de commande
1	Kappe, cap, capuchon	0000-2001.308
2	Kappe, cap, capuchon	0000-2000.503
3	Kappe, cap, capuchon	0000-2000.529
4	Kappe, cap, capuchon	0000-2007.483
5	Kappe, cap, capuchon	0000-2000.765
6	Kappe, cap, capuchon	0000-2007.441
7	Kappe, cap, capuchon	0000-2001.269
8	Kappe, cap, capuchon	0000-2007.344
9	Kappe, cap, capuchon	0000-2007.360
10	Kappe, cap, capuchon	0000-2007.386
11	Kappe, cap, capuchon	0000-2007.409
12	Kappe, cap, capuchon	0000-2007.506
13	Kappe, cap, capuchon	0000-2007.425
14	Kappe, cap, capuchon	0000-2007.467
15	Kappe, cap, capuchon	0000-2021.540
16	Kappe, cap, capuchon	0000-2003.021

Pos. Pos. Pos.	Benennung Designation Désignation	Bestellangaben Order Numbers Numéros de commande
17	Kappe, cap, capuchon	0000-2000.286
18	Kappe, cap, capuchon	0000-2000.286
19	Kappe, cap, capuchon	0000-3732.061
20	Kappe, cap, capuchon	0000-2022.361
21	Kappe, cap, capuchon	0000-2021.566
22	Kappe, cap, capuchon	0000-2021.582
23	Kappe, cap, capuchon	0000-2021.605
24	Kappe, cap, capuchon	0000-2050.223
25	Kappe, cap, capuchon	0000-2050.249
26	Kappe, cap, capuchon	0000-2050.265
27	Kappe, cap, capuchon	0000-2055.044
28	Drehknopf, Knob, Bouton	0001-0063.435
	Deckel, Cover, Couvercle	0001-0063.710
29	Drehknopf, Knob, Bouton	0001-0063.422
	Deckel, Cover, Couvercle	0001-0063.710
30	Scheibe, Window plate, Vitre	0955-0000.043

Int. Vermerk:
Pos. 1-23 in Liste Eingabeschaltung
Pos. 24-27 in Liste S-Verdrahtung
Pos. 28-30 in Liste Gerät komplett

Int. Note:
Pos. 1-22 in list entry circuit
Pos. 24-27 in list switch wiring
Pos. 28-30 in list complete instrument
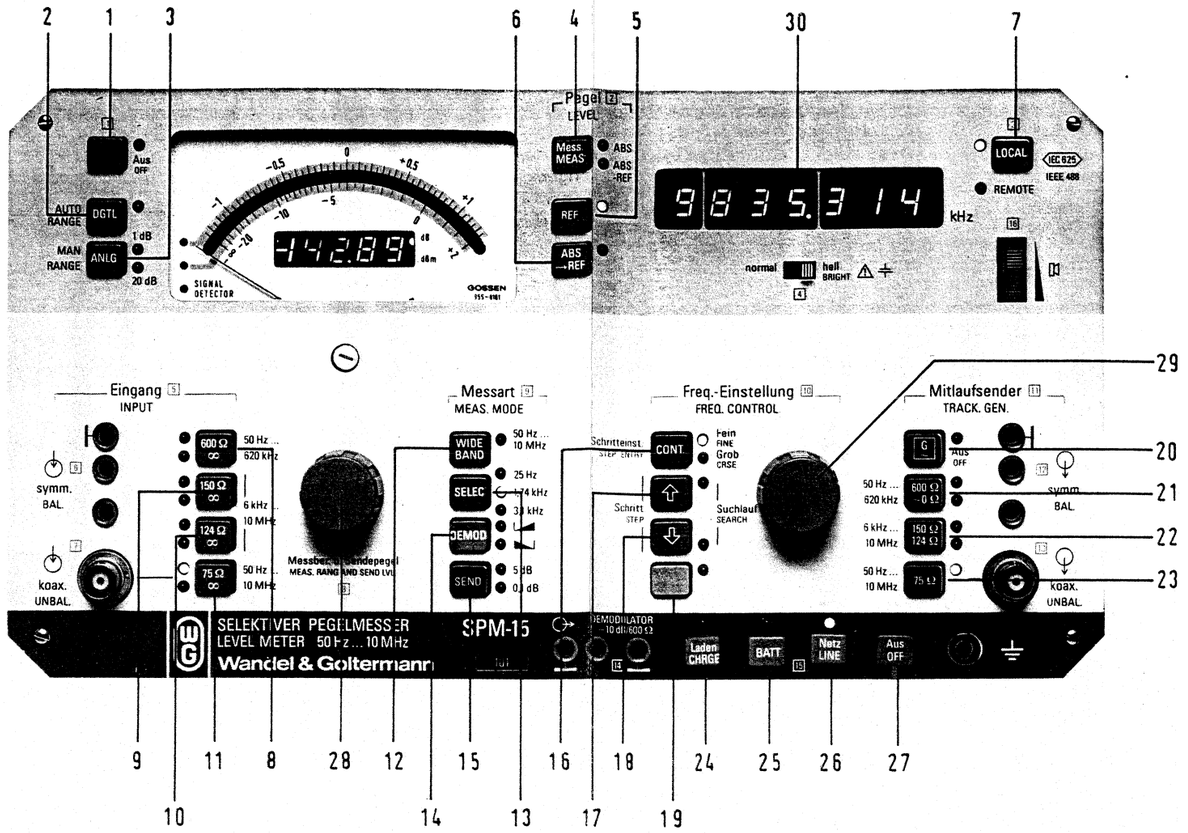
Note interne:
Pos. 1-23 dans liste circuit d'entrée
Pos. 24-27 dans liste câblage commutateur
Pos. 28-30 dans liste appareil complet